Volume II

1. Overhaul Unit 1 Turbine and Valves - Holyrood



2021 Capital Budget Application

Overhaul Unit 1 Turbine and Valves

Holyrood

July 2020

A report to the Board of Commissioners of Public Utilities

newfoundland labrador hydro
a nalcor energy company

Executive Summary

To support the continued safe and reliable operation of the Holyrood Thermal Generating Station ("Holyrood TGS") at rated output for the 2021–2022[1] winter operating season, Newfoundland and Labrador Hydro ("Hydro") is proposing to overhaul the Unit 1 turbine including the turbine valves.

Hydro's experience with the turbine has demonstrated that overhaul of the turbine every nine years and overhaul of the turbine valves every three years is appropriate based on the observations made during previous overhauls. These overhaul cycles are consistent with the Original Equipment Manufacturer's ("OEM") recommendations. The overhauls of the Unit 1 turbine and valves were last performed in 2012 and 2018, respectively. Unit 1 has operated at similar levels as it did in previous overhaul cycles. Given Hydro's commitment to have the Holyrood TGS fully available for generation until March 31, 2022, the Unit 1 turbine and valves require overhaul in 2021.

If an overhaul is not completed at this time, the turbine and valves could fail while in operation. Such failure could result in forced unit outages, resulting in the loss of up to 170 MW of generating capacity for several weeks to several months in duration, depending on the magnitude of the failure. Overhaul of the Unit 1 turbine and valves is necessary to maintain Hydro's safety and reliability standards, including Hydro's ability to meet customer demand during peak periods.

The budget estimate for this project is $8,026,600. Hydro expects to complete the project in 2021.

[1] In a letter dated February 14, 2020, Hydro advised the Board of Commissioners of Public Utilities ("Board") of its decision to extend operation of the Holyrood TGS as a generating facility to March 31, 2022.

Contents

Executive Summary i
1.0 Introduction 1
2.0 Background 1
2.1 Existing System 1
2.2 Operating Experience 2
3.0 Analysis 3
3.1 Identification of Alternatives 3
3.2 Evaluation of Alternatives 3
3.2.1 Deferral 3
3.2.2 Condition-Based Refurbishment 4
3.2.3 Overhaul 5
3.3 Recommended Alternative 5
4.0 Project Description 5
4.1 Scope 5
4.1.1 Unit 1 Turbine Overhaul 5
4.1.2 Unit 1 Turbine Valve Overhaul 6
4.1.3 Unit 1 Generator Electrical Testing 6
4.2 Estimate 6
5.0 Conclusion 7

1.0 Introduction

The Unit 1 turbine is a critical asset that is required for the generation of 170 MW of power at the Holyrood TGS and is required to be fully available for operation through the 2021–2022 winter operating season. Proper functioning of the turbine and valves is required for safe and reliable operation of Unit 1. The turbine and valves are exposed to several high wear mechanisms including high temperatures, high pressure, and high flow velocity. Hydro performs turbine overhauls on a nine-year cycle and turbine valve overhauls on a three-year cycle.

2.0 Background

2.1 Existing System

The Unit 1 turbine was manufactured by General Electric in 1969. The turbine consists of a high pressure section, an intermediate pressure section and a parallel flow low pressure section. Each section contains stages of buckets (attached to the rotor) and diaphragms (stationary). Passage of steam through these buckets and diaphragms converts the energy of the steam into rotational energy in the turbine. The turbine rotor sits on three journal bearings. A lube oil system consisting of a storage tank, oil coolers, and pumps provides lube oil to the bearings. The turbine rotor is directly coupled to the generator rotor.

The turbine has a set of steam valves. The major valves are the main stop valve, six control valves, two combined reheat stop/intercept valves, seven extraction steam non-return valves, and the blowdown valve. These valves control the admission of steam energy into the turbine to: (i) control the production of electricity, and (ii) provide protection to the turbine during upset situations such as a unit trip, powerline trip, or generator fault that could otherwise cause a catastrophic turbine overspeed condition or other damage to the turbine components.

Steam is admitted from the boiler into the high pressure section of the turbine through the control valves. These valves work together via hydraulic controls that open as required to admit the quantity of steam necessary to generate the desired MW output from the generator. Upstream of the control valves is the main stop valve. All main steam from the boiler passes through this valve and it is designed to close in the event of a trip to stop the supply of steam to the high pressure section of the turbine. Steam is also admitted from the boiler reheater to the intermediate section of the turbine. The admission of this steam is controlled by the combined reheat intercept/stop valves. These valves are opened also by the hydraulic control system and help control the speed of the turbine as well as the

output of the generator. They are also designed to slam shut and seal off steam supply in the event of a trip. The blowdown valve remains closed during normal turbine operation but opens in the event of a trip to release steam that becomes trapped in the turbine between the closed stop valves on the high pressure and intermediate pressure sections. The extraction non-return valves are also designed to close in the event of a trip. During normal operation these valves allow steam to be extracted from various sections of the turbine to be used for pre-heating of boiler feedwater for efficiency gains. In the event of a trip they must close to prevent backflow of steam into the turbine that could lead to overspeed.

The generator, which is coupled to the steam turbine rotor, was also constructed by General Electric in 1969. It consists of a stator and a rotating field for electricity production. Both the stator and rotor windings are original and have been in service longer than the normal expected life.

2.2 Operating Experience

Throughout 2019 and year-to-date 2020, Unit 1 has operated at similar levels as it did in previous overhaul cycles and it is expected to be available to operate at rated capacity through the 2021–2022 winter.

On January 11, 2013, the Unit 1 turbine experienced a failure that resulted in a forced outage which lasted approximately ten months. During a storm, the unit tripped and the lube oil pumps failed to supply oil to the bearings as the turbine coasted down to zero rotational speed. This resulted in extensive damage to the bearings and turbine rotor. Repairs were completed on site by Alstom (currently General Electric). Repairs included machining the rotor shaft at the bearing locations to remove the damaged and overheated material. As a result of the rotor shaft machining, the bearings and seals also had to be redesigned. Since the repairs, the vibration has been higher at the bearings than before, and the unit takes more time to run up to speed during start-up activities.

In 2018, during the scope of the turbine valve overhaul, the main steam inlet flange was removed and replaced with a pipe spool to eliminate the potential for leaks, which had led to forced outages on Unit 1 and Unit 2. To remove the upper half of the high pressure/intermediate pressure casing, this pipe spool had to be cut and re-welded during re-assembly. Also at that time, it was identified that the elbow directly downstream from the new spool had thinned as a result of erosion from approximately 50 years of operation. This was analysed by General Electric at the time and determined to be acceptable for

continued operation for 16,000 hours. The condition of this elbow must be re-evaluated in 2021, as refurbishment may be required.

Based on Hydro's operating experience, and consistent with OEM recommendations and industry standard practice, turbine and valve overhauls are performed on nine- and three-year cycles, respectively. The Unit 1 turbine was last overhauled in 2012 and the Unit 1 turbine valves were last overhauled in 2018; therefore, both are due for overhaul in 2021. The generator was last overhauled in 2018 and is not due for another overhaul until 2024. However, due to the age of the generator windings and their criticality, it has been recent practice at the Holyrood TGS to perform electrical testing of the windings every three years, aligning with the turbine valve overhauls. This testing provides assurance that the windings are in an acceptable condition for continued reliable operation. As it is completed without disassembly of the generator, the electrical testing performed during a generator non-overhaul year is limited in scope compared to the testing completed during a generator overhaul.

3.0 Analysis

3.1 Identification of Alternatives

Hydro evaluated the following alternatives:

- Deferral;
- Condition-based refurbishment; and
- Overhaul.

3.2 Evaluation of Alternatives

3.2.1 Deferral

Deferring this project increases the risk of turbine failure while in operation, which could result in collateral damage and a loss of 170 MW of generation for several weeks or months, depending on the magnitude of the failure. Data obtained through preventive maintenance activities does not provide adequate detail to enable Hydro to make an accurate prediction regarding the likelihood of failure in advance of the next planned overhaul.

Hydro is only able to evaluate the condition of the turbine if it is disassembled for internal inspection. Based on the condition noted in previous overhauls, Hydro believes that deferring the overhaul beyond its typical nine-year cycle increases the risk of a component failure that could lead to a catastrophic

failure. Turbine rotor blades, which spin at 60 times per second, must be inspected using non-destructive examination techniques to identify any cracking that could result in a serious failure. Failure of stationary components within the turbine could liberate parts that may pass through the turbine causing extensive severe damage. Such failures would result in forced outages of many weeks or months. Bearings must be disassembled and inspected using non-destructive examination techniques to ensure they are acceptable for continued operation and clearance measurements must be confirmed to ensure proper operation without oil leaks. Auxiliary components, including the lube oil system, must be cleaned, inspected and overhauled to ensure there is a continuous and reliable supply of lube oil to each bearing.

If the turbine valves are not overhauled, they will be at an elevated risk of malfunctioning. For example, oxide scale build up can impede movement of the valves, erosion and wear can increase clearances and lead to valve failures, and cracking and other damage may occur and propagate leading to failures. Proper operation of all of the turbine valves is required to admit steam to the turbine and control the turbine to produce electricity. A failure of any of the valves will limit production and likely result in a forced outage. Due to the complexity and magnitude of the components, outages of a significant duration would be expected if repairs were required. For example, in 2019, a control valve camshaft failure on Unit 2, which is identical to Unit 1, resulted in a forced outage which lasted 22 days. Additionally, from a safety perspective, the stop valves, blowdown valve, and non-return valves are required to prevent an overspeed failure. Such a failure has the potential to be catastrophic and can severely impact the safe and reliable operation. Further, the steam admitted to the turbine, even in the intermediate section, is at very high temperatures and high pressures. Failure of any pressure boundary valve component has the potential to become a serious safety hazard.

Generator electrical testing is required to ensure that the windings remain in acceptable condition for continued operation and to identify any concerns that may require planned interventions.

Hydro has determined that deferral is not a viable alternative as it poses an unacceptable level of risk to continued safe and reliable operation of Unit 1.

3.2.2 Condition-Based Refurbishment

The condition of the turbine and turbine valves cannot be adequately determined through external inspection or monitoring instrumentation. In order to assess the condition of internal components,

disassembly of the turbine and turbine valves is required. As such, condition-based refurbishment of the turbine valves is not a viable alternative.

3.2.3 Overhaul

This alternative consists of planned disassembly, detailed internal inspection, and reassembly of all major internal components of the turbine and turbine valves. Components that have been identified as damaged in the inspections are replaced. This alternative aligns with Hydro's experience and OEM recommendations and allows Hydro to manage risk within an acceptable level.

3.3 Recommended Alternative

Hydro recommends overhauling the Holyrood TGS Unit 1 turbine and turbine valves in 2021, consistent with OEM recommendations.

The timing of the in-service of the Muskrat Falls assets and the execution of the proposed steam generation related 2021 capital projects presents a unique circumstance. Should the successful integration and demonstrated reliability of the Muskrat Falls assets occur prior to March 31, 2022[2] and/or Hydro have clear evidence with respect to the in-service date of the Muskrat Falls assets prior to the execution of the proposed 2021 capital projects, careful consideration will be given to the necessity of executing the full scope of steam generation related capital projects.[3] Where there is opportunity to mitigate some portion of capital costs, Hydro will ensure prudency in its capital expenditures and notify the Board of such change, as appropriate.

4.0 Project Description

4.1 Scope

4.1.1 Unit 1 Turbine Overhaul

The turbine overhaul scope includes removal of the top half of the high pressure/intermediate pressure and low pressure casings, removal of the turbine rotor, and removal of the diaphragms. The rotor and diaphragms will be grit blasted to remove all scale build-up and non-destructive examination and visual inspection will be completed to identify cracks or other concerns that could potentially lead to turbine

[2] Planned retirement date for Units 1 and 2 and steam generation components of Unit 3 at Holyrood TGS.
[3] Where work may have already commenced on the proposed 2021 capital projects, Hydro will consider options for reducing the remaining portion(s) of the project scope, and thus capital costs, as appropriate and technically feasible.

failure. Replacement or refurbishment will be completed as required. The bearings will be disassembled for detailed inspection and overhauled or replaced with spare bearings as required. All bolts, studs and nuts will be inspected using non-destructive examination techniques to ensure they are in good condition. Parts will be replaced as required. Auxiliary equipment, including the lube oil system, will be overhauled to ensure all components are in good operational condition before returning to service. The turbine will be reassembled ensuring correct alignment and clearances. Balancing of the rotor will be completed upon unit start-up if required. While on site, the turbine contractor will assess any erosion damage at the steam inlet elbow to the upper control valves. Any refurbishment required to ensure safe operation will be completed by the contractor.

4.1.2 Unit 1 Turbine Valve Overhaul

The valve overhaul scope consists of dismantling all the control valves, main stop valve, combined reheat stop and intercept valves, extraction non-return valves, and blowdown valve for inspection and detailed measurements. The valves will be refurbished, as required, through replacement of damaged parts. The valves will be reassembled and commissioned to ensure proper operation.

4.1.3 Unit 1 Generator Electrical Testing

While on site performing the turbine and valve overhaul, the contractor will provide a generator specialist and dedicated equipment to perform electrical testing of the rotor and stator windings. This testing will be completed without dismantling of the generator.

The work will be completed by an external contractor. Plant personnel will assist as required, oversee the work protection application, and provide additional support as required.

4.2 Estimate

The estimate for this project is shown in Table 1.

Table 1: Project Estimate ($000)

Project Cost	2021	2022	Beyond	Total
Material Supply	40.0	0.0	0.0	**40.0**
Labour	781.1	0.0	0.0	**781.1**
Consultant	0.0	0.0	0.0	**0.0**
Contract Work	6,114.0	0.0	0.0	**6,114.0**
Other Direct Costs	0.0	0.0	0.0	**0.0**
Interest and Escalation	397.9	0.0	0.0	**397.9**
Contingency	693.6	0.0	0.0	**693.6**
Total	**8,026.6**	**0.0**	**0.0**	**8,026.6**

The anticipated project schedule is shown in Table 2.

Table 2: Project Schedule

Activity	Start Date	End Date
Planning:		
Prepare planning documents	January 2021	January 2021
Design:		
Prepare technical conditions for overhaul contract	February 2021	February 2021
Procurement:		
Prepare overhaul contract documents and award contract	February 2021	March 2021
Construction:		
Review materials inventory and supply construction materials	March 2021	November 2021
Perform turbine and valve overhauls and generator testing	June 2021	November 2021
Closeout:		
Prepare closeout documents	November 2021	December 2021

5.0 Conclusion

Overhauls of the Unit 1 turbine and turbine valves were last performed in 2012 and 2018, respectively. To support the continued safe and reliable operation of Holyrood TGS Unit 1 at its rated output of 170 MW through the 2021–2022 winter operating season, Hydro recommends overhauling the Unit 1 turbine and valves in 2021. This planned overhaul is consistent with previous overhaul cycles and the established OEM overhaul frequency that has historically supported safe and reliable operation of the units at the Holyrood TGS.

2. Hydraulic Generation Refurbishment and Modernization (2021–2022)

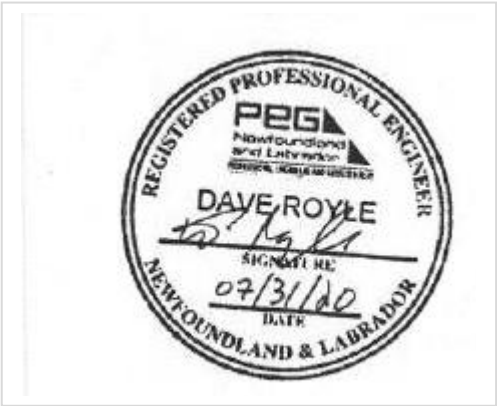

2021 Capital Budget Application

Hydraulic Generation Refurbishment and Modernization (2021–2022)

July 2020

A report to the Board of Commissioners of Public Utilities

newfoundland labrador hydro
a nalcor energy company

Executive Summary

Newfoundland and Labrador Hydro ("Hydro") aims to replace or refurbish failing or failed hydraulic generation assets to ensure the delivery of safe, reliable, least-cost electricity in an environmentally responsible manner.

Starting in 2017 and continuing in the 2021 Capital Budget Application ("CBA"), Hydro has consolidated much of its hydraulic generation capital work into one Hydraulic Generation Refurbishment and Modernization project. Hydro's philosophies for the assessment of equipment and the selection of capital work for the Hydraulic Generation Refurbishment and Modernization Project are outlined in the Hydraulic Generation Asset Management Overview ("Asset Management Overview").[1] In the 2021 CBA, Hydro proposes the following program-based activities under the Hydraulic Generation Refurbishment and Modernization project.

Hydraulic Generating Units Program

- Turbine and generator Six-Year Overhauls (PM9); and
- Refurbish generator rotor and stator.

Hydraulic Structures Program

- Control structure refurbishments; and
- Penstocks Level 2 condition assessment.

Reservoirs Program

- Upgrade Public Safety Around Dams.

Site Buildings and Services Program

- No identified projects in this program for 2021.

Common Auxiliary Equipment Program

- Replace annunciator panel;
- Replace diesel genset; and
- Replace air conditioning unit ("A/C unit").

[1] "2020 Capital Budget Application," Newfoundland and Labrador Hydro, August 1, 2019, vol. II, tab 1.

Six activities are scheduled for a one-year execution period and five activities are scheduled for multi-year execution periods. The total project estimate for all activities in the Hydraulic Generation Refurbishment and Modernization project (2021–2022) is $13,075,100.[2]

[2] $6,569,600 in 2021 and $6,505,500 in 2022.

Contents

Executive Summary i
1.0 Introduction 1
1.1 Hydraulic Generation Refurbishment and Modernization Program 1
2.0 2021–2022 Projects 1
2.1 Hydraulic Generating Units Program 1
2.1.1 Turbine and Generator Six-Year Overhauls 1
2.1.2 Refurbish Generator Stator 6
2.2 Hydraulic Structures Program 13
2.2.1 Control Structure Refurbishments 13
2.2.2 Penstock Level 2 Condition Assessment 19
2.3 Reservoirs 22
2.3.1 Upgrade Public Safety Around Dams 22
2.4 Common Auxiliary Equipment 24
2.4.1 Replace Annunciators 25
2.4.2 Replace Diesel Genset 32
2.4.3 Replace Air Conditioning Unit 35
3.0 Conclusion 37
3.1 Project Estimate 38
3.2 Project Schedule 38

List of Attachments

Attachment 1: 2020 Capital Budget Application - Hydraulic Generation Asset Management Overview

1.0 Introduction

1.1 Hydraulic Generation Refurbishment and Modernization Program

Hydro has ten hydraulic generating stations which require more than 3,000 individual assets to function. To support Hydro's asset management strategy, the assets are categorized based on the asset hierarchy. This grouping of the assets then makes up the individual programs within this proposal. The assets have been grouped into five programs as described in Section 2.0.

2.0 2021–2022 Projects

The assets designated for replacement, refurbishment, or modernization in the 2021–2022 Hydraulic Generation Refurbishment and Modernization project have been selected in accordance with the philosophies for assessment and selection found in Hydro's Asset Management Overview[3] (attached as Attachment 1).

Hydro's hydraulic generation infrastructure has been divided into five categories: (i) Hydraulic Generating Units; Hydraulic Structures; Reservoirs; Common Auxiliary Equipment; and Site Buildings and Services. There are no projects proposed for Site Buildings and Services in 2021–2022.

2.1 Hydraulic Generating Units Program

The following equipment upgrades and/or refurbishment for hydraulic generating units are proposed for 2021–2022:

- Turbine and generator Six-Year Overhauls at Bay d'Espoir Unit 5 and the Paradise River Unit; and
- Refurbish generator rotor and stator at Bay d'Espoir Unit 6.

2.1.1 Turbine and Generator Six-Year Overhauls

Description of Equipment

The turbine and generator are the two primary components of a hydraulic generating unit. Water is used to rotate the turbine, which is connected to the generator to convert the mechanical energy into electricity. Further information on the equipment is contained in the Asset Management Overview.

[3] The Hydraulic Generation Asset Management Overview outlines the Company's hydraulic generation asset maintenance philosophies. There are no changes to the document for 2021 and, as such, Version 3 which was filed with the 2020 CBA is included as Attachment 1 for reference purposes.

The Bay d'Espoir Unit 5 and the Paradise River Unit are both Francis turbine generating units and are rated for 76 MW and 8 MW, respectively. Bay d'Espoir Unit 5 was placed in service in February 1970 and the Paradise River Unit was placed in service in February 1989. The Francis hydraulic generating unit (Francis turbine runner) which is shown in Figure 1 extracts energy from the pressure differential of the water that flows through the turbine. The runner in the Francis configuration is always submersed in water. The flow enters the runner in the radial direction flowing towards its axis and, after interaction with the runner blades, exits along the direction of the axis as illustrated in Figure 2.



Figure 1: Francis Runner from Bay d'Espoir Unit 7

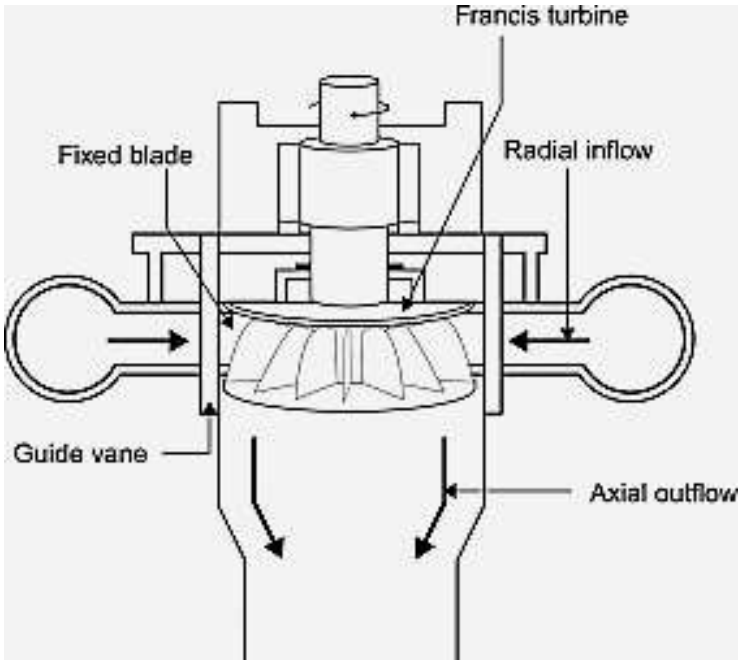

Figure 2: Mixed Flow Francis Turbine

A preventive maintenance Six-Year Overhaul ("PM9") is performed on the units with more detailed inspections than those in annual inspections ("PM6"). The PM9 inspections incorporate the PM6 items with additional recommendations from the Original Equipment Manufacturer ("OEM") to support the long-term reliability of the unit. Inspection of all major components (testing and/or repairs as required) on a six-year frequency contributes to a reduction in forced outages and deratings, as well as unplanned maintenance outages. For further information on preventive maintenance timing, refer to the Asset Management Overview.

Current Status

Bay d'Espoir Unit 5 and the Paradise River Unit are planned to undergo PM9 overhauls in 2021. Both units are currently in operational condition and available for service except during maintenance or forced outages.

A list of major work and upgrades at Bay d'Espoir Unit 5 is provided in Table 1.

Table 1: Major Work and Upgrades for Bay d'Espoir Unit 5

Year	Major Work/Upgrade
2015	Spherical valve bypass valve replaced
2015	Excitation transformer replaced
2014	Auto-grease system replaced
2010	Cooling water replaced
2005	Spherical valve controls upgrade Unit 5
2000	Turbine bearing cooling coil installation
2000	Generator bearing cooling coil installation
1995	Exciter replacement
1995	Runner replacement

A list of major work and upgrades at the Paradise River Unit is listed in Table 2.

Table 2: Major Work and Upgrades for Paradise River Unit

Year	Major Work/Upgrade
2003	Install frazil ice monitoring system

Justification

This work is required to maintain reliable operation of both the Bay d'Espoir and Paradise River units' turbine and generator.

Alternatives

Deferral of this project is not a viable option as it will increase the risk of premature unit failures. There are no alternatives to the PM9 overhauls. This is time based work performed every six years to maintain reliability of the operating units.

Project Description

The project is scheduled to be completed in 2021 with estimated costs of $220,400 for Bay d'Espoir Unit 5 and $341,900 for the Paradise River Unit. Table 3 and Table 4 contain the project estimates for the overhauls of Bay d'Espoir Unit 5 and the Paradise River Unit, respectively. This project involves the partial dismantling of both turbine/generator units to inspect, test, clean, refurbish, and replace defective components.

In addition to testing activities, PM9 overhauls involve cleaning and inspecting the rotor and stator assembly, electrical testing on rotor/stator assembly, calibration and testing of turbine and generator protection devices, verification of bearing and seal clearances, and a thorough inspection of the turbine, draft tube, and penstock.

Project Estimates

Table 3 and Table 4 provide the project estimates for BDE Unit 5 and the PRV Unit overhauls.

Table 3: Bay d'Espoir Unit 5 Project Estimate ($000)

Project Cost	2021	2022	Beyond	Total
Material Supply	16.0	0.0	0.0	**16.0**
Labour	170.6	0.0	0.0	**170.6**
Consultant	0.0	0.0	0.0	**0.0**
Contract Work	0.0	0.0	0.0	**0.0**
Other Direct Costs	7.6	0.0	0.0	**7.6**
Interest and Escalation	9.3	0.0	0.0	**9.3**
Contingency	16.9	0.0	0.0	**16.9**
Total	**220.4**	**0.0**	**0.0**	**220.4**

Table 4: Paradise River Unit Project Estimate ($000)

Project Cost	2021	2022	Beyond	Total
Material Supply	98.5	0.0	0.0	**98.5**
Labour	166.2	0.0	0.0	**166.2**
Consultant	0.0	0.0	0.0	**0.0**
Contract Work	0.0	0.0	0.0	**0.0**
Other Direct Costs	36.2	0.0	0.0	**36.2**
Interest and Escalation	19.9	0.0	0.0	**19.9**
Contingency	21.1	0.0	0.0	**21.1**
Total	**341.9**	**0.0**	**0.0**	**341.9**

Project Schedule

Table 5 and Table 6 provide the anticipated project schedules for Bay d'Espoir Unit 5 and the Paradise River Unit overhauls, respectively.

Table 5: Project Schedule Bay d'Espoir Unit 5

Activity	Start Date	End Date
Planning:		
Open work order and plan and develop detailed schedules	February 2021	March 2021
Construction:		
Perform PM9 on Bay d'Espoir Unit 5	April 2021	April 2021
Commissioning:		
Run up the unit to confirm operation and release to operations	April 2021	April 2021
Closeout:		
Close work order, complete all documentation, and complete lessons learned	June 2021	June 2021

Table 6: Project Schedule Paradise River Unit

Activity	Start Date	End Date
Planning:		
Open work order and plan and develop detailed schedules	January 2021	March 2021
Construction:		
Perform PM9 on Paradise River Unit	July 2021	July 2021
Commissioning:		
Run up the unit to confirm operation and release to operations	July 2021	July 2021
Closeout:		
Close work order, complete all documentation, and complete lessons learned	September 2021	September 2021

2.1.2 Refurbish Generator Stator

Description of Equipment

Unit 6 Generator Stator and Rotor

Bay d'Espoir Unit 6 is a 76.5 MW hydraulic generating unit, commissioned in 1970, which consists of a generator and turbine. The generator portion of the unit is made up of two primary components, the stator and rotor, which work together to generate electricity. The stator is a stationary component while the rotor is a rotating component. The rotor's outer surface is covered with electromagnets. The stator's inner surface, or cylinder wall, is comprised of copper windings. Figure 3 and Figure 4 show the stator windings.



Figure 3: Stator Windings – Top View

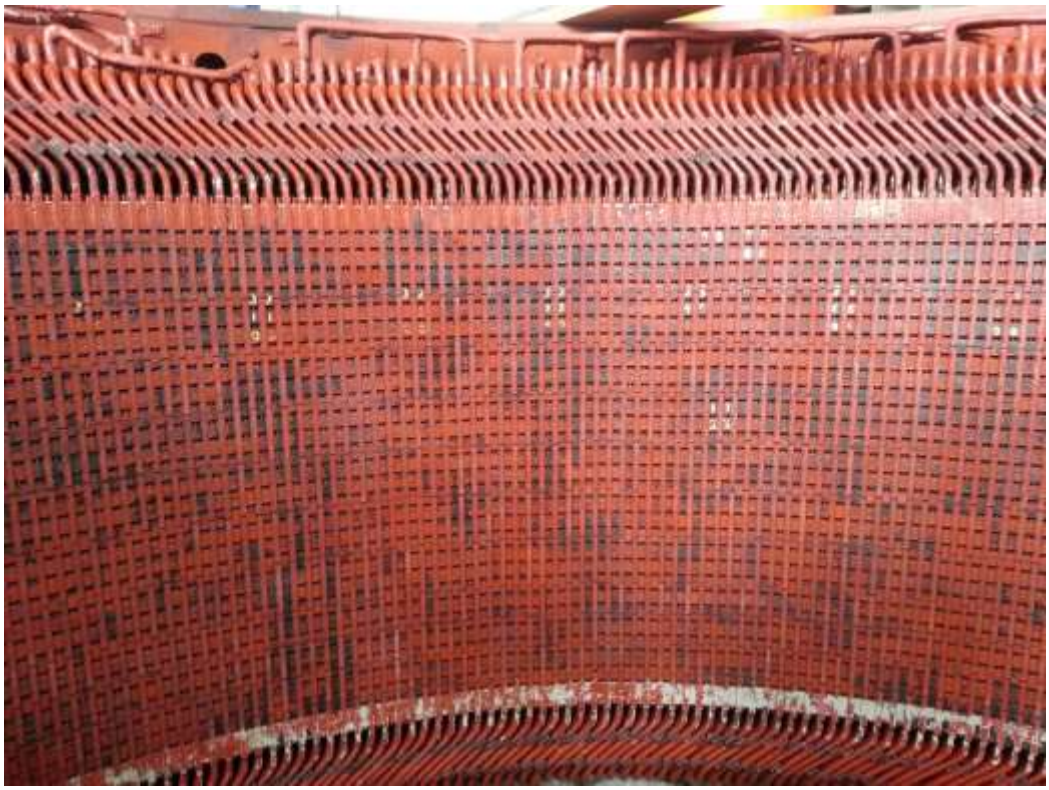

Figure 4: Stator Windings Showing Winding Strands

Air-Gap Monitoring

An air-gap monitoring system measures the air gap between the rotor and the stator. A change in the air gap can be influenced by operating conditions such as shaft oscillation, vibration, magnetic, and hydraulic forces. Bay d'Espoir Unit 6 is not equipped with an air-gap monitoring system; rather, it is manually collected during unit annual maintenance.

Partial Discharge Analysis

The partial discharge analysis system is used to collect partial discharge data to determine the rate and level of degradation of stator insulation and provide a warning of possible stator failure.

Rotor Flux Monitoring System

Bay d'Espoir Unit 6 is not equipped with a means to monitor the rotor flux, which is used to determine if a turn-to-turn short has occurred in the rotor windings. This information is critical in planning maintenance, explaining abnormal vibrations, and verifying rotor integrity.

For further information on the equipment, refer to the Asset Management Overview.

Current Status

Unit 6 Generator Stator and Rotor

Regular maintenance is performed on the unit on an annual basis (PM6), and an additional overhaul occurs every six years (PM9). A PM9 consists of an overhaul to inspect, clean, and perform more intrusive testing on the generator.

A direct current ("dc") high potential test ensures that the winding insulation has a minimum level of electrical strength to survive electrical stresses in normal service. The high potential step voltage controlled tests are in 3 kV steps for 3 minutes up to 27 kV (or 30 kVdc). At 27 kV, which is the last step, the duration is ten minutes. In the most recent high potential test, conducted in October 2016, the stator windings were unable to withstand the complete test. The Bay d'Espoir Unit 6 stator windings to ground started to show weakness at 21 kVdc; the test was terminated at this point. Based on the age of the machine, it is expected to withstand a dc high potential test of 24kV.

The results of this high potential test indicate that the Bay d'Espoir Unit 6 stator winding insulation cannot reliably remain in service for the next eight years without a rewind. If the insulation degradation continues, a failure which could halt unit production and require extensive unplanned repairs may

occur. Such a failure could remove 76.5 MW of hydro generation capacity from the system for the duration of those repairs.

Physical inspection of the Bay d'Espoir Unit 6 rotor indicates the presence of oil and soot on the surface of the poles and the pole stacking. To correct this condition, Hydro will perform a detailed cleaning of the rotor while it is removed from the unit during the rewind of the stator.

Air-Gap Monitoring

Currently, as Bay d'Espoir Unit 6 is not equipped with an air-gap monitoring system, there is no means to determine when the minimum operating air gap is reached during operation. Online monitoring of the air gap between the rotor and stator would provide timely information about its physical condition as it changes over time and under different operating conditions.

Partial Discharge Analysis

An existing partial discharge analysis coupler termination box installed on the generator allows Hydro maintenance staff to collect periodic partial discharge analysis data from the stator; this set-up requires staff to physically set up the portable test equipment connected to a laptop computer near the generator test ports and collect partial discharge analysis data through terminal box. This setup can collect one data sample at various voltage ranges at a time and does not allow continuous online trending to monitor equipment health. Use of the current equipment is also labour intensive. In addition, the equipment required to be connected to the partial discharge analysis couplers is no longer functional and is expensive to replace.

Rotor Flux Monitoring System

Bay d'Espoir Unit 6 is not equipped with a means to monitor the rotor flux which is used to determine if a turn-to-turn short have occurred in the rotor windings. This information is critical in planning maintenance, explaining abnormal vibrations, and verifying rotor integrity.

Justification

This project is required to maintain the reliability of Bay d'Espoir Unit 6. A stator failure will pose a risk of the unit undergoing multiple years of unplanned repairs meaning approximately 76.5 MW of hydro generation would not be available. The rotor refurbishment will improve the service life of the rotor which in turn increases the reliability of the generator and reduce vibration.

The auxiliary monitoring equipment presented for this project is proposed to be completed in parallel with the stator rewind and rotor cleaning for three reasons.

Maintenance Trending

To better understand unit performance so that maintenance intervention can be scheduled properly, utilizing an online rotor flux monitoring system, continuous partial discharge analysis monitoring system and airgap systems will allow for real time trending. This trending will help verify if the unit is operating within limits set by the manufacturers and also allow for a more proactive maintenance approach.

Opportunistic Scheduling

Rotor flux monitoring hardware can only be installed when the rotor is removed from the unit, which normally takes place every six years during a PM9. A four-month outage for a rewind will provide ample time to complete this task. Similarly, partial discharge analysis continuous monitoring and airgap monitoring systems will require a unit outage to install necessary hardware.

Cost Control

With a focus on maintaining unit reliability and controlling costs; the opportunity to install the online monitoring systems in the same outage window will eliminate the need to plan another unit outage and will effectively utilize the available time and resources needed to install this equipment.

Alternatives

Deferral of this project is not a viable option as it will pose material risk to system reliability. The stator windings on Bay d'Espoir Unit 6 have an expected life span of 45 years. Unit 6 was commissioned in March of 1970. To date, the unit has surpassed the expected life of its windings by 5 years. By the time this project is executed the windings on Unit 6 will have over 52 years of operation, therefore, the alternative to delay this project is not recommended. Any further delay in rewinding this unit will jeopardise its reliability.

Project Description

The project will be executed in 2021–2022, with an estimated cost of $9,160,900. Table 7 contains the project estimate breakdown of the Refurbish Generator Stator project.

This project involves:

- Replace the stator windings which involves the removal of the existing 360 individual braided strands that make up the Roebel windings and supply, installation, testing, and commissioning of a new stator assembly;
- Cleaning the entire rotor assembly using Hydro standards for rotor cleaning;
- Procure and install an air-gap monitoring system monitored from the Bay d'Espoir control room as installed on Units 1-4;
- Procure and install an Iris power rotor flux monitoring system which is compatible with the Hydro GuardII module by Iris Power; and
- Procure and install continuous a partial discharge analysis monitoring system compatible with existing hardware. This includes:
  - Install a GuardII module;
  - Install USB and Ethernet ports with Modbus (TCP/IP) protocol;
  - Install a 12 Partial Discharge input module for continuous online monitoring;
  - Re-configure the partial discharge pulse data collected through the capacitors for analysis by the GuardII software; and
  - Install a monitoring computer and PI historian for data collection.

Project Estimates

Table 7 provides the project estimated for the Refurbish Generator Stator project.

Table 7: Refurbish Generator Stator Project Estimate ($000)[4]

Project Cost	2021	2022	Beyond	Total
Material Supply	0.0	155.0	0.0	**155.0**
Labour	136.0	752.5	0.0	**888.5**
Consultant	22.6	22.6	0.0	**45.2**
Contract Work	3,250.0	3,250.0	0.0	**6,500.0**
Other Direct Costs	8.7	39.8	0.0	**48.5**
Interest and Escalation	206.8	605.3	0.0	**812.1**
Contingency	333.4	378.3	0.0	**711.7**
Total	**3,957.5**	**5,203.5**	**0.0**	**9,161.0**

Project Schedule

Table 8 provides the anticipated project schedule for the Refurbish Generator Stator project.

Table 8: Project Schedule Refurbish Generator Stator Bay d'Espoir Unit 6

Activity	Start Date	End Date
Planning: Open work order and plan and develop detailed schedules	January 2021	March 2021
Procurement: Develop tender for consultants and materials required	April 2021	November 2021
Construction: Rewind unit, install air-gap monitor, and partial discharge system	May 2022	August 2022
Commissioning: Run up the unit to confirm operation and release to operations	September 2022	October 2022
Closeout: Close work order, complete all documentation, and complete lessons learned	October 2022	November 2022

[4] The estimate for Unit 6 is different from the estimate from the 2019–2022 Unit 5 rewind proposal due to an expanded scope to clean the rotor and to add a rotor flux system. Additionally, with one year of execution on Unit 5 there are more realistic tendered numbers available.

2.2 Hydraulic Structures Program

The following equipment upgrades and/or refurbishment for hydraulic structures are proposed for 2021–2022:

- Control structure refurbishments including:
  - Refurbish hydraulic structures; and
  - Replace frazil ice forecasting system.
- Penstocks Level 2 condition assessment.

A proposal for the refurbishment of the Ebbengunbaeg Control structure is included in the 2021 CBA. Hydro chose to include it as a stand alone project to ensure clarity on the scope of work and associated level of investment.

2.2.1 Control Structure Refurbishments

Background

This work is a continuation of a program to refurbish hydraulic structures within Hydro's generating system. The program began in 2010 with refurbishment work at Burnt Dam. The last submission to the Board of Commissioners of Public Utilities for this program was in the 2020 CBA Hydraulic Generation Refurbishment and Modernization (2020–2021) proposal.[5]

The structures identified for the Hydraulic Generation Refurbishment and Modernization (2021–2022) proposal are Salmon River Spillway (Level 2 Condition Assessment), and Hinds Lake (Frazil Ice System).

Description of Equipment

Refurbish Hydraulic Structures

Salmon River Spillway Level 2 Condition Assessment

The Salmon River Spillway, located 18 km from Bay d'Espoir, was placed in service in 1967 during the original construction of Bay d'Espoir. The spillway is a concrete structure equipped with three wheeled gates that are nine meters wide and operate under a maximum head of nine meters. The gates are operated with screw stem hoists and there is an emergency hydraulic hoist in the event of power supply

[5] "2020 Capital Budget Application," Newfoundland and Labrador Hydro, August 2, 2019, vol II, tab 1.

or motor failure. The spillway discharges excess water from the Long Pond Reservoir to the Salmon River (Figure 5).



Figure 5: Salmon River Spillway

Existing State

Salmon River Spillway

In 2009, Hydro had all control structures assessed to rank the structures for asset health. Detailed assessments were not performed at that time to inspect embedded parts and submerged concrete.

To determine the current condition and plan for future refurbishments this assessment is needed.

Justification

This project is required to maintain the reliable operation of Salmon River Spillway Structure. In order for Hydro to keep Salmon River Spillway's operations reliable this Level 2 condition assessment is required.

Alternatives

As detailed in the 2009 report, Hydro's aging hydraulic structures require refurbishment. There is no alternative to refurbishment which starts with the Level 2 condition assessment of the structure. The

alternative of deferring or delaying this project is not recommended as this will negatively impact the reliability of this critical asset.

Install Frazil Ice Forecasting System

Background

Frazil ice is a mass of super cooled ice crystals formed in a turbulent water flow. These are tiny ice particles that form at or near the water/air interface. As they have low buoyancy characteristics these particles migrate towards the bottom of the water passage and continuously build up at various elevations on the trash racks.

The intake structure trash rack is the primary means of defense to limit debris from entering the intake and ultimately flowing into the hydro unit downstream. The trash rack is susceptible to frazil ice buildup more than other components as it is the first component the frazil ice will pass by.

Figure 6 is a picture illustrating buildup of frazil ice on an intake trash rack.

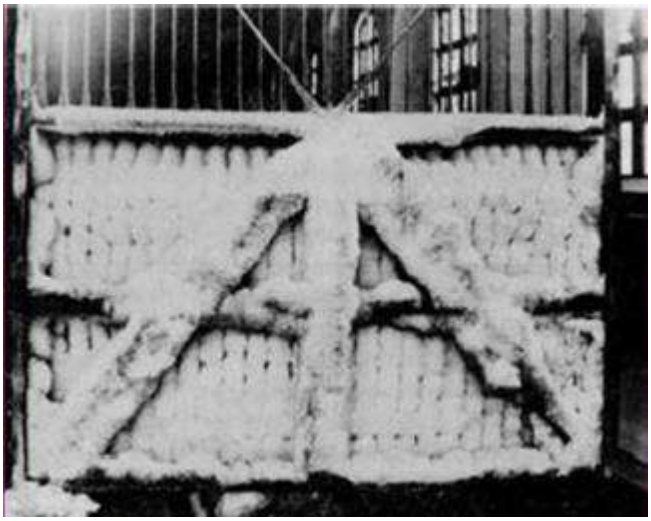

Figure 6: Frazil Ice Formation on Intake Trash Racks (US Army Corps of Engineers, 1991)

Buildup of frazil ice on intake trash racks will continue to grow until the opening between trash rack bars is effectively blocked, which could result in a forced outage. Buildup of frazil ice is exponential in time; the longer Operations are unable to clear the intake of frazil ice, the blockage to the intake worsens. Figure 7 is an illustration that demonstrates that as frazil ice forms the effect of the accumulation is exponential over time.

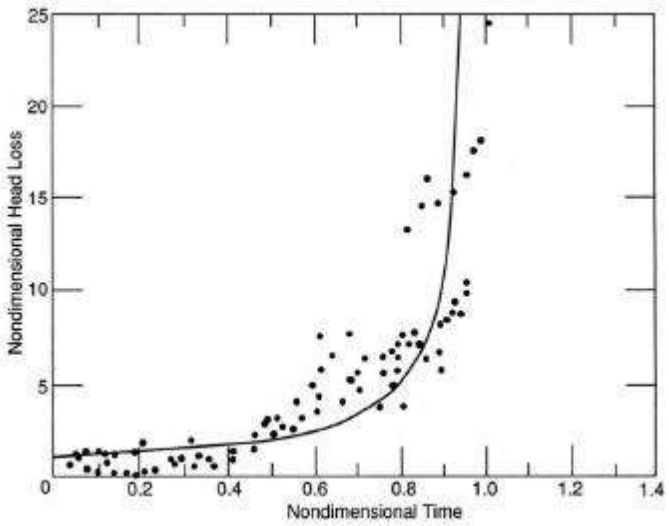

Figure 7: Head Loss through a Trash Rack during Frazil Ice Accumulation (US Army Corps of Engineers, 1991)

Description of Equipment

The Frazil Ice Monitoring System consists of a temperature probe, which measures the rate of change of the water temperature around freezing point. The temperature probe sends an analog signal to the Hinds Lake intake Programmable Logic Controller ("PLC") which is programmed to send an alarm when temperature conditions exist for the formation of frazil ice. The current system also consists of water level transducers located on the upstream and downstream sides of the trash rack, these are used to detect a rise in water level at the intake, and determine the trash rack differential. When a potential for frazil ice formation is detected the unit is either shut down or loading is reduced to help establish ice cover at the fore bay and canal. If frazil ice has formed on the trash rack the unit is taken offline and the intake Bubbler System is started by Operations to help remove the frazil ice and prevent any further buildup. If it cannot be removed by the Bubbler System divers are called in to remove the frazil ice blockage.

Existing State

The current detection system is unreliable as it only utilizes water temperature to determine the potential of frazil ice formation, and does not include variables such as wind speed, wind direction, and air temperature. Also, the signal for the water temperature is converted several times by various devices (i.e., transmitters, loop isolators) before it is received by the PLC and these conversions add a certain amount of error to the signal making it unreliable in the detection of frazil ice potential. There have been four forced outages in the past two years due to high trash rack differential caused by the buildup

of frazil ice on the trash rack. In each instance the Frazil Ice Monitoring System failed to recognize that a potential for frazil ice formation was present.

In each instance the Bubbler System was started by Operations and in three of the instances it was successful in removing the frazil ice, however in one event divers were required to clear the blockage.

Justification

This project is justified to reduce the possibility of frazil ice damaging the intake structures. Failure of the current system could result in severe damage to the intake structure and penstock, leading to extended unit down time.

Alternatives

The alternative of deferring this project is not a viable as the system is not fully designed to detect critical variables for frazil ice formation.

The current system to detect frazil ice at the Hinds Lake Intake is not reliable and does not have important physical variables like wind speed and direction that is needed to predict frazil ice with accuracy. The replacement of this system is recommended to ensure higher accuracy in predicting frazil ice.

Refurbish Hydraulic Structures

Project Description

Salmon River Spillway

Level 2 Condition Assessment

The project will be executed in 2021, with estimated costs of $556,800. Refer to Table 9 for the project estimate breakdown. The Level 2 condition assessment will be completed by a consultant with substantial experience with hydraulic structures. The project will include a thorough inspection of the superstructure, embedded parts, and the gates. The consultant shall produce a report outlining inspection results and recommended actions, which is suitable for Hydro to use in planning for maintenance and future capital investment.

Install Frazil Ice Forecasting System

Project Description

The project will be executed in 2021–2022, with estimated costs of $199,500. Refer to Table 10 for the project estimate breakdown.

This project will remove the existing Frazil Ice Monitoring System and will install a data logger as well as an anemometer for wind speed/direction, a digital water temperature sensor, and an RTD-based sensor for measuring ambient temp. All instruments will be interfaced to the data logger which will be connected to the existing intake structure communication network. Data collected will be incorporated on the administration network for processing and alarm management. The data logger will also be configured to send a hardwired alarm to the powerhouse annunciator.

Remote control of the Hinds Lake Intake Bubbler System by ECC will also be included in this project.

Project Estimates

Table 9 and Table 10 present the project estimates for the Salmon River Spillway Level 2 condition assessment and the Frazil Ice Forecasting System in Hinds Lake.

Table 9: Salmon River Spillway Level 2 Condition Assessment Project Estimate ($000)

Project Cost	2021	2022	Beyond	Total
Material Supply	5.0	0.0	0.0	**5.0**
Labour	146.2	0.0	0.0	**146.2**
Consultant	250.0	0.0	0.0	**250.0**
Contract Work	50.0	0.0	0.0	**50.0**
Other Direct Costs	28.7	0.0	0.0	**28.7**
Interest and Escalation	30.0	0.0	0.0	**30.0**
Contingency	46.9	0.0	0.0	**46.9**
Total	**556.8**	**0.0**	**0.0**	**556.8**

Table 10: Hinds Lake Replace Frazil Ice Forecasting System Project Estimate ($000)

Project Cost	2021	2022	Beyond	Total
Material Supply	12.7	3.9	0.0	**16.6**
Labour	50.9	69.1	0.0	**120.0**
Consultant	0.0	0.0	0.0	**0.0**
Contract Work	0.0	15.0	0.0	**15.0**
Other Direct Costs	0.3	13.1	0.0	**13.4**
Interest and Escalation	4.3	13.7	0.0	**18.0**
Contingency	6.4	10.1	0.0	**16.5**
Total	**74.6**	**124.9**	**0.0**	**199.5**

Project Schedule

The anticipated project schedule is shown in Table 11 and Table 12 for the Salmon River Spillway Level 2 condition assessment and the Frazil Ice Forecasting System in Hinds Lake.

Table 11: Project Schedule Salmon River Spillway Level 2 Condition Assessment

Activity	Start Date	End Date
Planning:		
Open work order and plan and develop detailed schedules	February 2021	March 2021
Procurement:		
Develop tender for consultants for the assessment	March 2021	April 2021
Condition Assessment:		
On site for condition assessment	May 2021	May 2021
Closeout:		
Close work order, complete all documentation, and complete lessons learned	November 2021	November 2021

Table 12: Project Schedule Hinds Lake Replace Frazil Ice Forecasting System

Activity	Start Date	End Date
Planning:		
Open work order and plan and develop detailed schedules	February 2021	March 2021
Pre-Engineering:		
Site visit, review CBP, and develop BOM	February 2021	March 2021
Engineering:		
Design system, order materials, contract for diving services, modify PLC logic	March 2021	November 2021
Construction:		
Install junction boxes, run cables, install devices and PLC modules	July 2022	July 2022
Commissioning:		
Confirm operation of system and all values appearing on EMS web page	August 2022	August 2022
Closeout:		
Close work order, complete all documentation and complete lessons learned	September 2022	October 2022

2.2.2 Penstock Level 2 Condition Assessment

Background

Due to its experience with Bay d'Espoir Penstocks 1 to 3, Hydro reviewed its penstock inspection practices as they relate to its entire portfolio. Referencing the ASCE Steel Penstocks, 2012 manual and

CEATI Penstock Inspection 2017 report, Hydro has an inspection interval of six years, including enhanced internal inspection activities and reviews. For further information on the equipment, refer to Appendix A in the Asset Management Overview, under the Hydraulic Structure section. Through this review, the Paradise River penstock/rock tunnel was identified as requiring an inspection.

Description of Equipment

The Paradise River penstock/rock tunnel was commissioned in 1989. It is a combination of rock tunnel and a steel section. The rock tunnel is approximately 4.4 m × 4.4 m with a length of 255 m. The rock tunnel transitions to a steel section, the penstock, which is approximately 45 m × 3 m in diameter.

Existing State

The last inspection of the Paradise River penstock/rock tunnel was completed in 2006 with no major issues noted at that time. However, as this inspection took place 14 years ago, Hydro believes that it is prudent to complete a level 2 condition assessment at this time to determine whether conditions have deteriorated. As most of the penstock is rock cut, it would be difficult or impossible to determine if there were issues from an external inspection.

Justification

Without knowledge of the overall condition of the penstock, refurbishment will not properly be scheduled. This would jeopardize the reliability of the connected units. To ensure the long-term reliability of Paradise River penstock/rock tunnel, a Level 2 condition assessment is required.

For safety purposes, the assessment will be completed via an underwater ROV.[6] This work will result in 3D mapping of the tunnel, with an accompanying report that documents any identified rock falls, significant cracks/fissures, rock trap build up, steel liner interfacing issues with the rock tunnel, etc. Hydro will use the results of the inspection to confirm the long-term reliability of the asset and plan required maintenance and/or upgrades.

Alternatives

Deferral of this project is not recommended as the penstock in Paradise River was last inspected in 2006 and the inspection is required to determine the condition of the asset and its ability to continue safe and

[6] Remotely-operated vehicle ("ROV").

reliable operation. Additionally, external inspection is not practical due to the nature of the infrastructure.

Project Description

This project is for a Level 2 condition assessment of the Paradise River penstock, which includes an inspection of the penstock and rock tunnel. For safety purposes, the assessment will be completed via an underwater ROV equipped with a specialized long range underwater camera. This camera will provide 3D mapping of rock falls, significant cracks/fissures, rock trap build up, steel liner interfacing with the rock tunnel, etc. The equipment will be operated by a specialized consultant that is experienced in the operation of remote underwater imaging equipment in tunnel environments. The consultant will identify anomalies during the inspection and produce a report, which is suitable for Hydro to use in planning for tunnel maintenance.

Project Estimate

The estimate for the Level 2 condition assessment of Paradise River penstock/rock tunnel is presented in Table 13.

Table 13: Level 2 Condition Assessment Project Estimate ($000)

Project Cost	2021	2022	Beyond	Total
Material Supply	1.5	0.0	0.0	**1.5**
Labour	86.5	0.0	0.0	**86.5**
Consultant	72.3	0.0	0.0	**72.3**
Contract Work	0.0	0.0	0.0	**0.0**
Other Direct Costs	8.1	0.0	0.0	**8.1**
Interest and Escalation	11.6	0.0	0.0	**11.6**
Contingency	16.8	0.0	0.0	**16.8**
Total	**196.8**	**0.0**	**0.0**	**196.8**

Project Schedule

Table 14 provides the anticipated project schedule for the Level 2 condition assessment of Paradise River penstock/rock tunnel.

Table 14: Level 2 Condition Assessment Project Schedule

Activity	Start Date	End Date
Planning:		
Project setup, develop scope statement, etc.	January 2021	February 2021
Procurement:		
Develop tender for consultants, tender, and award contract.	February 2021	March 2021
Construction:		
Level 2 condition assessment	July 2021	July 2021
Report:		
Review	August 2021	September 2021
Closeout:		
Project completion certificate and lessons learned	October 2021	December 2021

2.3 Reservoirs

Hydro is proposing to upgrade Public Safety Around Dams in 2021–2022.

2.3.1 Upgrade Public Safety Around Dams

Description of Equipment

Dams and waterways are critical assets for the hydraulic generation of electricity. A dam is a barrier that stops or restricts the flow of water, and waterways are structures that direct the flow of water. These assets require control measures to keep the public safe and informed of the impact these assets have on the surrounding area. Hydro undertakes the implementation of control and notification measures through its Public Safety Around Dams Program. For further information on the dams and waterways refer to Appendix A in the Asset Management Overview. Section 4.6.1 of the Asset Management Overview provides additional information related to the Public Safety Around Dams Program.

Over the past decade, an increase in noted public interactions with hydraulic generating structures, including access by recreational vehicles and boating near spilling gates, has prompted the development of this program in accordance with Canadian Dam Association Public Safety Around Dams Guidelines issued in 2011. The Canadian Dam Association's Public Safety Around Dams Guidelines are considered industry practice in Canada to increase Public Safety Around Dams and associated waterways.

Public safety risks are determined by completing risk assessments in accordance with the Canadian Dam Association's Dam Safety Guidelines. Appropriate control measures are installed to reduce the safety risk to the public. These measures include such items as signage, fencing, audible or visual alarms,

booms and buoys, operational changes, and public education. The dams and waterways included in this proposal are:

- Hinds Lake: reservoir consists of dams, control structure, and an intake structure; and
- Paradise River: reservoir consists of an arched dam, rock-filled dyke, and an intake structure.

Existing State

The Hinds Lake reservoir had a Public Safety Around Dams risk assessment completed in 2018 which outlines areas that need to be addressed. Year 1 recommendations were completed in 2020.

The Paradise River reservoir had a Public Safety Around Dams risk assessment completed in 2019 which outlines areas that need to be addressed.

Justification

This project is necessary to increase public safety for Hinds Lake and Paradise River dams and associated waterways.

Alternatives

Deferral of this project is not an acceptable solution as it is required for public safety. No other alternatives were considered.

Project Description

The project will be executed in 2021, with estimated costs of $436,300. Refer to Table 15 for the project estimate breakdown.

The scope of this project includes completion of:

- Hinds Lake Year 2 implementation. Year 2 for Hinds Lake will include the installation of fencing and signage; and
- Paradise River Year 1 implementation. Year 1 for Paradise River will include the installation of signage.

Project Estimate

The project estimate for the Upgrade Public Safety Around Dams project in 2021 is presented in Table 15.

Table 15: Upgrade Public Safety Around Dams Project Estimate ($000)

Project Cost	2021	2022	Beyond	Total
Material Supply	14.2	0.0	0.0	**14.2**
Labour	159.1	0.0	0.0	**159.1**
Consultant	25.2	0.0	0.0	**25.2**
Contract Work	128.3	0.0	0.0	**128.3**
Other Direct Costs	48.8	0.0	0.0	**48.8**
Interest and Escalation	24.9	0.0	0.0	**24.9**
Contingency	35.8	0.0	0.0	**35.8**
Total	**436.3**	**0.0**	**0.0**	**436.3**

Project Schedule

The anticipated project schedule for the Upgrade Public Safety Around Dams project in 2021 is presented in Table 16.

Table 16: Upgrade Public Safety Around Dams Project Schedule

Activity	Start Date	End Date
Planning:		
Project setup, develop scope statement, etc.	February 2021	May 2021
Procurement:		
Special material requirements	March 2021	June 2021
Construction:		
Installation of public safety devices	July 2021	October 2021
Closeout:		
Project completion certificate, lessons learned	October 2021	November 2021

2.4 Common Auxiliary Equipment

The following equipment upgrades and/or refurbishment for Common Auxiliary Equipment are proposed for 2021–2022:

- Replace Annunciators;
  - Bay d'Espoir Hydroelectric Generating Facility - Powerhouse 1; and
  - Hinds Lake Hydroelectric Generating Station.
- Replace diesel genset; and
  - Burnt Dam.

- Replace A/C Unit;
  - Bay d'Espoir - Powerhouse 1 Control Room.

2.4.1 Replace Annunciators

Description of Equipment

Bay d'Espoir

The Bay d'Espoir Powerhouse 1 Annunciation System consists of a CORE 2000 controller (Figure 8) and a PANALARM lamp style annunciator (Figure 9). The CORE 2000 continuously monitors discrete inputs from field devices to determine whether an alarm condition is present. If an alarm condition is present, it energizes its relay output for that alarm point, which causes the corresponding annunciator window to turn on and a signal to sound. Operators can acknowledge and reset alarms by pushing the corresponding button located at the bottom of the annunciator or on the operator control room desk. There is a third button at the bottom of the annunciator to verify that the annunciator lamps are functioning properly.



Figure 8: CORE 2000 Controller



Figure 9: PANALARM Annunciator

In addition to the control room annunciator there is a smaller lamp style annunciator panel (Figure 10) located in each of the auto-control cabinets for generating Units 1–6. These annunciators have turbine and generator field devices wired directly to them and display alarms based on inputs from these devices. There are buttons located on the auto-control annunciators to allow personnel to acknowledge, reset alarms and to test that the annunciator window lamps are functioning properly.



Figure 10: Unit 1 Bay d'Espoir Annunciator

Hinds Lake

The Hinds Lake annunciation system was manufactured by Federal Pioneer and is used to provide alarm status and acknowledge capabilities for operating personnel at the plant. The main portion of system is located within the control room and a separate portion is located within the station service equipment on the plant floor (Figure 11 and Figure 12). There are approximately 160 points of alarm in total that this system can monitor with a portion of the alarm circuits dedicated in the protection and control of the plant.

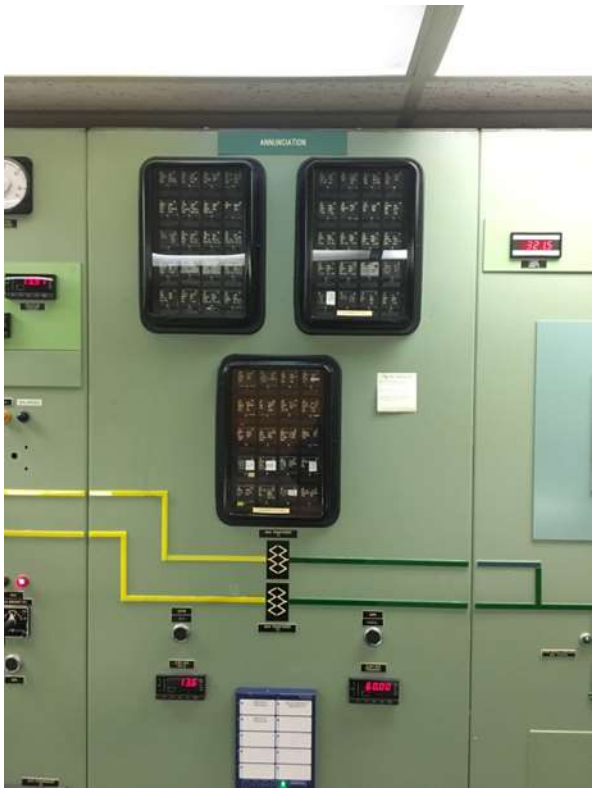

Figure 11: Control Room Annunciator



Figure 12: Station Service Annunciator

Existing State

Bay d'Espoir

The CORE 2000 controller, control room and auto control annunciators are over 20 years old. They are obsolete and no longer available from the manufacturer. The CORE 2000 controller has experienced issues with its relay contacts failing causing false alarms on the control room annunciator. To resolve these failures, the alarm is either blocked or the relay card has to be removed to have an electronic component replaced. Both the control room and auto control annunciators have experienced lamp driver problems, which resulted in missed alarms or delays in detecting alarms. If available, the spare parts for these annunciators are old, used and unreliable.

Hinds Lake

The Federal Pioneer annunciation system at Hinds Lake is original to the plant construction in 1980. After using this system for approximately 40 years, the system cannot be expanded anymore because all the spare expansion points have been used and there have been issues with the systems reliability due to failed parts. The system is no longer manufactured and the original manufacturer no longer provides technical support on the system or spare parts.

Justification

The early detection of alarm conditions and prompts decreases the likelihood of an outage due to missed or false alarms. For both Bay d'Espoir and Hinds Lake, the annunciation systems are obsolete and the original manufacturer no longer provides technical support or replacement parts. Both systems have experienced reliability issues and spare parts, if available, are old, used and unreliable. To continue to use obsolete annunciation systems would negatively impact the safe and reliable operation of the powerhouse and hydraulic generating units.

Alternatives

Deferral is not an option for this project as both systems are obsolete and at the end of their service life. Continuing to use obsolete annunciation systems at Bay d'Espoir and Hinds Lake may hinder the early detection of alarm conditions and prompt actions, which would increase the likelihood of unplanned outages. As such, deferring this work is not a viable option as it presents an unacceptable risk to Hydro's ability to safely and reliably meet customer needs. There are no other alternatives for activities identified within this project.

Project Description

Bay d'Espoir

The project to replace the control room and auto control annunciators will be split up into two phases. Phase one, spanning from 2021–2022, will start with the complete design of the whole system and then focus on the replacement of the control room equipment, including the CORE 2000 controller and control room annunciator. The CORE 2000 will be replaced with a remote input/output ("IO") rack located in the control room and will be controlled by the data acquisition PLC. The data acquisition workstation located on the operator desk will be modified to include alarming and two 32 inch monitors to allow multiple screens to be viewed at one time. The control room annunciator will be replaced with an operator interface terminal ("OIT") to allow acknowledgment and resetting of alarms from its location. Alarms will also be acknowledged and reset from the data acquisition workstation or from acknowledge and reset buttons on the operator desk.

Phase 2, spanning from 2023–2024, will replace the auto control annunciators on Units 1-6 with PLC racks and operator interface terminals. There will be a PLC and OIT located in each auto control cabinet. Each PLC will run independent and send alarms to its corresponding auto control OIT, the control room workstation and OIT. Alarms will be acknowledged or reset from either the auto control cabinet or control room. There will be an ethernet network connection over fiber between the auto control cabinet to the turbine generator cabinet where it will be connected back over the existing fiber to the managed ethernet switch. Phase 2 project estimate and schedule will be developed in 2022 for the 2023 CBA submission.

Hinds Lake

The Hinds Lake annunciator replacement project is a two year project, 2021–2022, to design and replace the annunciator system. This project involves the removal of the existing annunciation system and the installation of a new PLC, and all associated wiring to the new PLC. It also includes the installation of additional PLC cards in the PLC that exists in the station service panel. There will be two new human machine interface ("HMI") computer stations installed which will be handling the alarming and acknowledging of alarms. Additional communication wiring will be installed to allow Ethernet communication between the PLC and the HMI.

Project Estimates

The project estimates for the Bay d'Espoir and Hinds Lake annunciator replacement projects in 2021–2022 are presented in Table 17 and Table 18, respectively.

Table 17: Bay d'Espoir Annunciator Replacement Project Estimate ($000)

Project Cost	2021	2022	Beyond	Total
Material Supply	101.4	0.0	0.0	**101.4**
Labour	57.8	56.1	0.0	**113.9**
Consultant	0.0	0.0	0.0	**0.0**
Contract Work	0.0	0.0	0.0	**0.0**
Other Direct Costs	1.5	2.3	0.0	**3.8**
Interest and Escalation	10.7	15.0	0.0	**25.7**
Contingency	16.1	5.8	0.0	**21.9**
Total	**187.5**	**79.2**	**0.0**	**266.7**

Table 18: Hinds Lake Annunciator Replacement Project Estimate ($000)

Project Cost	2021	2022	Beyond	Total
Material Supply	77.6	6.2	0.0	**83.8**
Labour	82.6	114.7	0.0	**197.3**
Consultant	0.0	0.0	0.0	**0.0**
Contract Work	0.0	0.0	0.0	**0.0**
Other Direct Costs	1.5	24.4	0.0	**25.9**
Interest and Escalation	10.9	22.5	0.0	**33.4**
Contingency	16.2	14.5	0.0	**30.7**
Total	**188.8**	**182.3**	**0.0**	**371.1**

Project Schedule

The project schedule for the Bay d'Espoir and Hinds Lake annunciator replacement projects in 2021–2022 are presented in Table 19 and Table 20, respectively.

Table 19: Bay d'Espoir Annunciator Replacement Project Schedule

Activity	Start Date	End Date
Planning:		
Project setup, develop scope statement, etc.	February 2021	May 2021
Design:		
Full design of control room and auto control equipment	May 2021	December 2021
Procurement:		
Purchase all materials outlined in the design	January 2022	April 2022
Construction:		
Installation new system and commission	July 2022	November 2022
Closeout:		
Project completion certificate, lessons learned	November 2022	December 2022

Table 20: Hinds Lake Annunciator Replacement Project Schedule

Activity	Start Date	End Date
Planning:		
Project setup, develop scope statement, etc.	February 2021	May 2021
Design:		
Full design of control room and auto control equipment	May 2021	September 2021
Procurement:		
Purchase all materials outlined in the design	September 2021	October 2021
Construction:		
Installation new system and commission	April 2022	July 2022
Closeout:		
Project completion certificate, lessons learned	October 2022	November 2022

2.4.2 Replace Diesel Genset

Description of Equipment

The Burnt Dam Spillway Structure ("Burnt Spillway") consists of two steel gates that allow water from the Burnt Pond Reservoir, a small uncontrolled reservoir south of the Victoria Lake Reservoir, to be spilled in a controlled, non-destructive manner when needed for flood control. Water discharged from the Burnt Spillway is lost from the Bay d'Espoir reservoir system, and not available for production of electrical energy at Granite Canal, Upper Salmon and Bay d'Espoir. In addition to flood control, the gates at the Burnt Spillway provide fisheries compensation flow into the White Bear River to protect fish populations. The gates, on site accommodations, and all auxiliary equipment at Burnt Spillway are powered by three diesel generators ("gensets"). The gensets vary in capacity and are operated

depending on the equipment being powered and the time of the year the equipment is being used. Gensets on site include:

- A 75 kW genset dedicated to the operations of the gates;
- A 60 kW genset to supply the accommodation facilities and the heating system of the gates during winter; and
- A 25 kW genset for the accommodation facilities during the summer.

It is estimated that an average of two gate operations per month are performed at this site, with the majority of operations required for fisheries compensation. Each genset at the Burnt Spillway runs independent of each other and have no paralleling capabilities.

Existing State

The diesel units in Burnt Dam undergo regular PMs which include a documentation of current operating hours on the unit. As of November 2019, the total operating hours on each unit is as follows:

- Unit 1 - 60 kW: 46,717 hours;
- Unit 2 - 25 kW: 9,931 hours; and
- Unit 3 - 75 kW: 8,354 hours

Typical interval for replacement of a unit is 20,000 hours for 1,800 rpm units such as the three units at Burnt Dam. Therefore, Unit 1, the 60 kW unit is overdue for a replacement.

Justification

This project to replace Unit 1 Diesel is required to support the reliable operation of the Burnt Spillway. If this generator is not replaced, there is increased risk of failure. Without this 60 kW genset, it would not be possible to supply the gate heating system and the accommodation facilities at Burnt Dam through the winter operating period without running the 75 kW diesel.

Alternatives

Deferral of this project is not recommended as Unit 1, the 60 kW unit, is overdue for replacement. Deferral presents an unacceptable risk to Hydro's ability to safely and reliably maintain this critical asset.

Project Description

The project will be executed in 2021–2022, with an estimated cost of $1,161,800.

This project involves:

- Review of site load requirements;
- Determination of appropriate diesel genset size;
- Assessment of the current control logic for all three units; and
- Purchase and installation of a replacement diesel genset for Unit 1.

Project Estimate

The project estimate for the Replace Diesel Genset project in 2021–2022 is presented in Table 21.

Table 21: Replace Diesel Genset Project Estimate ($000)

Project Cost	2021	2022	Beyond	Total
Material Supply	0.0	170.0	0.0	**170.0**
Labour	215.1	370.4	0.0	**585.5**
Consultant	0.0	115.0	0.0	**115.0**
Contract Work	0.0	0.0	0.0	**0.0**
Other Direct Costs	0.0	104.7	0.0	**104.7**
Interest and Escalation	15.1	85.8	0.0	**100.9**
Contingency	16.0	69.7	0.0	**85.7**
Total	**246.2**	**915.6**	**0.0**	**1,161.8**

Project Schedule

The anticipated project schedule for the Replace Diesel Genset project in 2021–2022 is presented Table 22.

Table 22: Replace Diesel Genset Project Schedule

Activity	Start Date	End Date
Planning:		
Project setup, develop scope statement, etc.	January 2021	March 2021
Engineering:		
Site visit, load study, design/specification development for tender/procurement	May 2021	July 2021
Procurement:		
All the required material's- for genset and Protection & Control Upgrade	November 2021	April 2022
Construction & Commission:		
Remove old genset and Protection & Control Equipment. Run up the new genset and Protection & Control Equipment to confirm operation and release to operations	July 2022	August 2022
Closeout:		
Project completion certificate, lessons learned	September 2022	October 2022

2.4.3 Replace Air Conditioning Unit

Description of Equipment

The A/C unit located in the control room in powerhouse one at the Bay d'Espoir Generating Station is used to keep the temperature and humidity within the control room at required levels. Sensitive electronic equipment within the control room is used to run and monitor six generating units. The A/C unit is required to maintain room temperature and humidity levels between 30 to 50% relative humidity. If the humidity is too high, there is a risk of water damage. If the humidity too low, there is risk of electric static shock.

The control room A/C unit is an R-22 Lennox Packaged Rooftop air conditioning unit with a 10 ton cooling capacity. It includes two supply fans, an outdoor air economizer, a DX cooling coil, and compressor.

Existing State

The A/C unit has been in service for over 30 years and is at the end of its service life. The unit has had major component failures, such as compressors and condensers. These failures require replacement of the R-22 refrigerant, which is no longer permitted to be manufactured due to the damage it can cause to the environment. Internal components have deteriorated and corroded increasing the likelihood of

accidental releases of ozone depleting gas into the atmosphere. The unit is unreliable and requires corrective maintenance on a regular basis.

Justification

This project is justified based on environmental requirements and for reliability purposes. As of January 1, 2020, the production of R-22 refrigerant is no longer allowed. The only available supplies will be from sources which have been recovered and recycled and this gas will become unavailable within a short time frame. Additionally, due to the units age and previous repair requirements, the risk of accidentally releasing this gas to the environment is high if it continues to be used.

Alternatives

Deferral of this project is not appropriate as the A/C unit is unreliable, Hydro will soon be unable to obtain the R-22 refrigerant required to operate it, and operating it in its current condition presents a potential risk to the environment. There are no alternatives to replacement.

Project Description

The project will be executed in 2021, with an estimated cost of $162,900. The project estimate breakdown is provided in Table 23.

This project will involve the full replacement of the control room A/C unit, the replacement includes:

- Removal of the old unit;
- Recovery and storage of the R-22 refrigerant;
- Procurement of a new unit of the same capacity; and
- Installation and commissioning of the new air conditioning unit.

Project Estimate

The project estimate for the Replace Air Conditioning Unit project in 2021 is presented in Table 23.

Table 23: Replace Air Conditioning Unit Project Estimate ($000)

Project Cost	2021	2022	Beyond	Total
Material Supply	0.0	0.0	0.0	**0.0**
Labour	98.2	0.0	0.0	**98.2**
Consultant	0.0	0.0	0.0	**0.0**
Contract Work	35.0	0.0	0.0	**35.0**
Other Direct Costs	6.4	0.0	0.0	**6.4**
Interest and Escalation	9.3	0.0	0.0	**9.3**
Contingency	14.0	0.0	0.0	**14.0**
Total	**162.9**	**0.0**	**0.0**	**162.9**

Project Schedule

The anticipated project schedule for the Replace Air Conditioning Unit project in 2021 is presented Table 24.

Table 24: Replace Air Conditioning Unit Project Schedule

Activity	Start Date	End Date
Planning:		
Project setup, develop scope statement, etc.	January 2021	January 2021
Engineering:		
Site visit, specification for new A/C unit, tender/procurement	February 2021	April 2021
Procurement:		
Tender for supply & installation contract	June 2021	August 2021
Construction & Commission:		
Remove AC Unit, dispose R-22 and install new A/C unit. Run up the new A/C unit to confirm and release to operations	October 2021	November 2021
Closeout:		
Project completion certificate, lessons learned	November 2021	December 2021

3.0 Conclusion

This report provides information and justification related to the projects Hydro is proposing to undertake on its hydraulic generating units, structures, reservoirs, and common auxiliary equipment under its Hydraulic Generation Refurbishment and Modernization Program in 2021–2022.

3.1 Project Estimate

The overall project estimate total for all activities described in the Hydraulic Generation Refurbishment and Modernization (2021–2022) project is shown in Table 25.

Table 25: Hydraulic Generation Refurbishment and Modernization Project Estimate ($000)

Project Cost	2021	2022	Beyond	Total
Material Supply	326.9	335.1	0.0	**662.0**
Labour	1,369.2	1,362.8	0.0	**2,732.0**
Consultant	370.0	137.6	0.0	**507.6**
Contract Work	3,463.3	3,265.0	0.0	**6,728.3**
Other Direct Costs	147.8	184.3	0.0	**332.1**
Interest and Escalation	352.8	742.3	0.0	**1,095.1**
Contingency	539.6	478.4	0.0	**1,018.0**
Total	**6,569.6**	**6,505.5**	**0.0**	**13,075.1**

3.2 Project Schedule

Individual schedules for each activity are provided in Section 2.0 of this report. Typically, a high-level schedule for a multi-year project is as follows:

- Year 1: Planning, Design, and Procurement; and
- Year 2: Construction, Commissioning, and Closeout.

For one-year projects, all activities will be completed in one year. One-year projects typically have short material lead times and shorter construction requirements. Hydro anticipates all activities in this proposal to be completed before December 2022.

Attachment 1

2020 Capital Budget Application

Hydraulic Generation Asset Management Overview

newfoundland labrador hydro
a nalcor energy company



2020 Capital Budget Application
Hydraulic Generation Asset Management Overview

July 2019

newfoundland labrador hydro
a nalcor energy company

A report to the Board of Commissioners of Public Utilities

Executive Summary

Newfoundland and Labrador Hydro ("Hydro") has developed an ongoing capital program to replace or refurbish assets as they reach the end of their design life, or require attention due to obsolescence or anticipated failure.

Historically, Hydro's Hydraulic Generation projects could be divided into two categories; stand-alone, and programs. Programs include projects that are proposed year after year to address the need to upgrade or replace deteriorated equipment, such as control cables, and have similar justification each year. Stand-alone would include projects that do not meet the definition of a program. Hydro has had as many as 80 separate program-type projects in its capital budget applications over the past 5 years, with each stand-alone project tailored to a specific asset.

Starting with the 2018 Capital Budget Application ("CBA"), Hydro implemented a change to how the hydraulic generation programs are submitted for consideration by the Board of Commissioners of Public Utilities ("Board"). Hydro has consolidated the programs into the Hydraulic Generation Refurbishment and Modernization Project, thereby improving regulatory efficiency and easing the administrative effort for both the Board and Hydro. This change will also allow Hydro opportunities to realize efficiencies by improving the coordination of capital and maintenance work on the Hydraulic Generation assets.

With the 2020 CBA, Hydro submits this updated version of the Hydraulic Generation Asset Management Overview ("Asset Management Overview") to provide an updated overview of Hydro's hydraulic generation asset maintenance philosophies into one document. Annually, beginning with the 2018 CBA, Hydro will propose the required projects specific to each year, referencing the Asset Management Overview document.

Contents

Executive Summary i
1.0 Introduction 1
1.1 Changes in Version 3 2
2.0 Hydraulic Generation Background 2
2.1 Hydraulic Generating Stations 2
2.2 Infrastructure Classifications 4
3.0 Hydraulic Generation Capital Projects 4
3.1 Historical Hydraulic Generation Capital Projects 4
3.2 Hydro's Approach to Hydraulic Generation Capital Projects 5
3.3 Benefits of the New Approach 5
4.0 Asset Management Programs 6
4.1 Condition Assessment Practices 6
4.2 Program Types and Timing 7
4.3 Asset Classification Description 9
4.4 Hydraulic Generating Units Asset Classification 9
4.4.1 Turbine and Generator Six Year Overhauls Program 11
4.4.2 Turbine Major Refurbishment Program 11
4.4.3 Generator Refurbishment Program 12
4.4.4 Spherical Valve By-Pass Refurbishment Program 12
4.4.5 Exciter Replacement and Refurbishment Program 12
4.4.6 Automate Generator Deluge Systems Program 12
4.4.7 Refurbish Generator Bearings Program 12
4.4.8 Replace Auto Greasing Systems Program 12
4.4.9 Replace Unit Metering, Monitoring, Protection, SCADA and Control Assets Program 13
4.4.10 Other Sustaining Activities 14
4.5 Hydraulic Structures Asset Classification 14
4.5.1 Refurbishment and Replacement of Control Gates Infrastructure Program 17
4.5.2 Refurbish Surge Tanks Program 17
4.5.3 Penstock Inspection Program 17
4.5.4 Other Sustaining Activities 17

4.6 Reservoirs Asset Classification 17
4.6.1 Upgrade Public Safety around Dams and Waterways Program 20
4.6.2 Other Sustaining Activities 20
4.7 Site Buildings and Services Asset Classification 20
4.7.1 Access Road Refurbishment Program 22
4.7.2 Diesel Fuel Storage Refurbishment and Replacement Program 22
4.7.3 Draft Tube Deck Refurbishment Program 22
4.7.4 Other Sustaining Activities 22
4.8 Common Auxiliary Equipment Asset Classification 23
4.8.1 Station Service Refurbishment and Replacement Program 25
4.8.2 Service/Cooling Water Refurbishment and Replacement Program 25
4.8.3 Air Conditioning Refurbishment and Replacement Program 25
4.8.4 Standby Generator Refurbishment and Replacement Program 26
4.8.5 Ancillary AC/DC Electrical System Refurbishment and Replacement Program 26
4.8.6 Other Sustaining Activities - Common Auxiliary Equipment Program 26

List of Appendices

Appendix A: Full Asset Description

Appendix B: Operational Hour and Time Based Activity Background

Appendix C: Overhaul Timing Background

1.0 Introduction

Hydro has 10 hydraulic electric generating stations. There are over 3000 assets involved in the operation of these stations.

Hydro has an Asset Management Program which governs the life cycle of its hydraulic generation assets. This program monitors, maintains, refurbishes, replaces and disposes of assets with the objective of providing safe, reliable electrical power in an environmentally responsible manner at least cost. Within this program, assets are grouped at each location by five asset classifications, including hydraulic generating units, hydraulic structures, reservoirs, site buildings and services, and auxiliary equipment. This allows asset management personnel to establish, where possible, consistent practices as it applies to equipment specification, placement, maintenance, refurbishment, replacement and disposal. These practices ensure that monitoring, assessing, justifying for capital refurbishment, and replacing for asset sustaining purposes are consistently executed. Hydro has established programs which enact these practices for assets or sub-grouping of assets, for example, turbine overhauls are performed on each hydraulic generating unit.

Part of Hydro's Annual Capital Program is a sustained effort to ensure the safety and reliability of generation assets. Historically, the Board's approval for this effort has been requested by Hydro submitting either individual projects for particular assets, or programs for hydraulic generation sustaining work in its CBA. This approach has resulted in a segmented view of the expenditures to sustain generation assets. For example, in the 2017 CBA, there were 14 projects submitted. The expenditures detailed in the projects according to the Board's classifications are normal capital expenditures. Combining these projects into a Hydraulic Generation Asset Management Program provides an opportunity to increase regulatory efficiency and provide a more focused presentation of Hydro's sustaining efforts for hydraulic generation.

With the 2018 CBA, Hydro consolidated planned Hydraulic Generation sustaining work into a project called Hydraulic Generation Refurbishment and Modernization Project ("Project"). Additionally, in the 2018 CBA, Hydro submitted a project titled "Hydraulic Generation In-Service Failures", to cover the replacement or refurbishment of failed equipment, or incipient failures. Hydro is utilizing the Asset Management Overview as a reference for these projects to streamline and focus information submitted.

The Asset Management Overview provides supporting information which was, historically, presented annually for projects in a CBA. The remainder of this document provides information on the assets involved, a description of each asset, and how this document will be updated in the event of changes to Hydro's asset management philosophies.

Hydro will update the Asset Management Overview each year as it implements changes to its asset management practices appropriate for inclusion in the Asset Management Overview.

1.1 Changes in Version 3

This report is Version 3 of the Asset Management Overview, submitted with the 2020 CBA. All material changes in this version are shaded in grey, and are summarized below:

- Section 4.4.9: Replace Unit Metering, Monitoring, Protection, SCADA and Control Assets Program
- This section has been updated to include the Air Gap Monitoring Program and Partial Discharge Monitoring Replacement Program.
- Section 4.5.3: Penstock Inspection Program
- This section has been added to highlight the Penstock Inspection Program that began in Bay d'Espoir and is continuing at other locations.

Minor changes to syntax have been made to improve readability. These minor changes have not been highlighted.

2.0 Hydraulic Generation Background

2.1 Hydraulic Generating Stations

The location, number of generators at each location, and the total rated generating capacity of Hydro's ten generating stations is as follows:

1) Bay d'Espoir ("BDE"), seven units in two powerhouses outputting 613.4 MW;
2) Cat Arm ("CAT"), two units outputting 134 MW;
3) Upper Salmon ("USL"), one unit outputting 84 MW;
4) Hinds Lake ("HLK"), one unit outputting 75 MW;

5) Granite Canal ("GCL"), one unit outputting 40 MW;

6) Paradise River ("PRV"), one unit outputting 8 MW;

7) Snook's Arm ("SAM"), one unit outputting 560 kW

8) Venams Bight ("VBT"), one unit outputting 340 kW; and

9) Roddickton ("RMH"), one unit outputting 440 kW.

Table 1 provides the in-service dates for each turbine generating unit.

Table 1: Turbine Generating Unit In-Service Dates

#	Location	In-Service Date
1	Paradise River	February 26, 1989
2	Bay d'Espoir Powerhouse 1	Unit 1: March 1967 Unit 2: June 1967 Unit 3: October 1967 Unit 4: September 1968 Unit 5: February 1970 Unit 6: March 1970
3	Bay d'Espoir Powerhouse 2	Unit 7: December 1977
4	Upper Salmon	January 1983
5	Granite Canal	August 2003
6	Snook's Arm	September 1957 (Acquired in 1968)
7	Venams Bight	April 1957 (Acquired in 1968)
8	Hinds Lake	December 1980
9	Cat Arm	Unit 1: February 1985 Unit 2: February 1985
10	Roddickton	December 1980

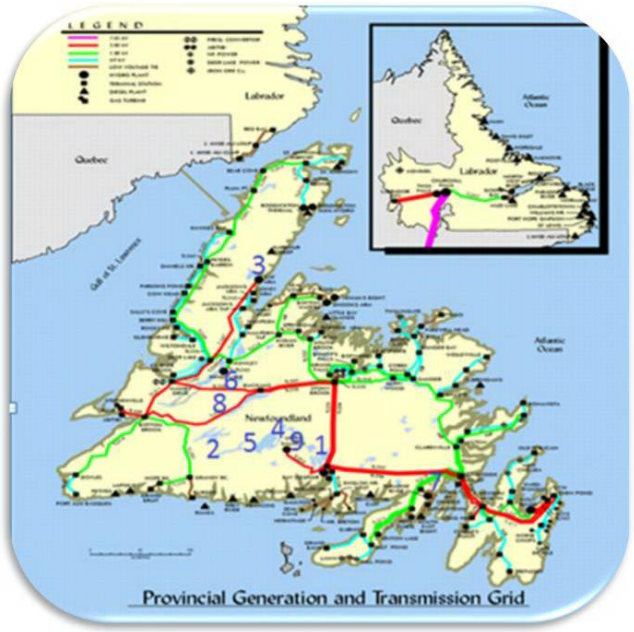

1. Bay d'Espoir – Powerhouses #1 & #2
2. Burnt Dam – Spillway Structure
3. Cat Arm - Powerhouse
4. Ebbegunbaeg – Control Structure
5. Granite Canal – Powerhouse
6. Hinds Lake - Powerhouse
7. Paradise River - Powerhouse
8. Star Lake - Powerhouse
9. Upper Salmon - Powerhouse

Figure 1: Hydraulic Generation and Structures Locations

2.2 Infrastructure Classifications

The approximately 3000 hydraulic generating assets are functionally grouped into hydraulic generating units (Section 4.4), hydraulic structures (Section 4.5), reservoirs (Section 4.6), site buildings and services (Section 4.7), and auxiliary equipment classifications (Section 4.8). A functional description and further sub-classification of the infrastructure, equipment and systems within these five asset classifications is provided in Appendix A: Full Asset Description.

3.0 Hydraulic Generation Capital Projects

3.1 Historical Hydraulic Generation Capital Projects

In the 2017 CBA, there were 14 individual Hydraulic Generation projects, which accounted for $13.1 Million, or 5 percent of the Capital Budget. Historically, Hydro's generating station projects were divided into two categories; stand-alone, and programs. Programs include projects that are proposed year after year to address the required refurbishment or replacement of assets, such as control cables, and have similar justification presented each year. Of the 14 individual Hydraulic Generation projects proposed in 2017, two were program- related and the 12 stand-alone projects were similar to projects submitted in previous CBAs and as such were continuing efforts to sustain hydraulic generating assets.

3.2 Hydro's Approach to Hydraulic Generation Capital Projects

The programs now included in the Project are:

- Hydraulic Generating Units Program;
- Hydraulic Structures Program;
- Reservoirs Program;
- Site Buildings and Services Program; and
- Common Auxiliary Equipment Program.

Items which will be excluded from the Hydraulic Generation Refurbishment and Modernization Project and be proposed separately include:

- Activities which cannot be scheduled for inclusion in the annual CBA. As these projects will be submitted as either a supplementary application or executed in the Hydraulic Generating Stations In-Service Failures Project.
- Activities in response to additional load or reliability requirements. As these projects generally have unique justifications, the projects will be proposed separately.
- Activities in response to significant isolated issues in a particular station, such as a replacement of a damaged turbine. As these projects generally have unique justification, the projects will be proposed separately.

Hydro will continue to maintain individual records with regards to asset capital, maintenance and retirement expenditures and performance, to support the development of the annual capital plan.

3.3 Benefits of the New Approach

Supporting information such as asset descriptions change infrequently. Referencing the Asset Management Overview in the Project documentation will eliminate the preparation and review of repetitious information. Hydro estimates that this approach could save up to $130,000[1] annually, not including time and costs for review by the Board and Intervenors.

[1] If the work to be undertaken in the 2018 Hydraulic Generation Refurbishment and Modernization Project had been submitted as 13 individual projects, its estimated preparation cost would be approximately $10,000 per project.

Hydro has a proactive Asset Management Program to anticipate future failures so that refurbishment or replacement can be incorporated into a CBA. However, there are situations were immediate refurbishment or replacement, which has not been included in a CBA, has to be undertaken due to the occurrence of an unanticipated failure or the recognition of an incipient failure. This is necessary to maintain the delivery of safe, reliable electricity at least cost. These situations seldom include extenuating or abnormal circumstances and costs. With aging assets, unanticipated failures are expected to increase. This increase will require additional future efforts to provide and review regulatory documentation. By introducing a Hydraulic Generation In-Service Failures project, there will be a reduced need for that documentation and change management processes. Each year, Hydro will provide a concise summary of the previous year's work.

Hydro expects the Hydraulic Generation Refurbishment and Modernization Project will provide opportunities whereby Hydro can further optimize the coordination of opportunities to optimize capital and maintenance work to minimize outages on equipment as personnel look to further coordinate work by location.

4.0 Asset Management Programs

4.1 Condition Assessment Practices

Hydraulic generation asset management personnel primarily obtain information to assess the condition of hydraulic generation assets through calendar-based or equipment operating time-based activities. Calendar-based activities include, but are not limited to, daily, weekly, monthly, quarterly, annual and three-year preventive maintenance procedures. Operating time-based activities include 500, 1000 or 2000-hour preventive maintenance procedures. More information on calendar based or equipment operating time based activities is presented in Appendix B: Operational Hour and Time Based Activity Background.

Capital overhauls and refurbishments are conducted on differing timeframes depending upon the asset, but range from approximately 6 to 25-year time frames. The actual timing of this work is determined by asset management personnel after considering various factors such as reliability, safety, frequency of operation, asset criticality, condition, operating constraints and geographic location. More information on how timing is determined is presented in Appendix C: Overhaul Timing Background.

The more frequent calendar-based and equipment operating time-based maintenance procedures consist of visual inspection of the equipment to look for abnormalities, such as noticeable cracks, rust, corrosion, electrical tracking, and component malfunction, as well as minor maintenance such as oil and filter changes, as required. The remaining preventive maintenance procedures and capital program activities require outages to the equipment and entail progressive levels of disassembly, checking, testing and adjustments of systems and components allowing for the identification of abnormalities which cannot otherwise be identified. These activities require greater or complete disassembly, specialized inspections and testing of equipment and, if required based upon condition assessment, unforeseen refurbishment or replacement activities completed within the approved budget for the program.

The condition assessment information, documented by the personnel executing these activities, is reviewed by Long Term Asset Planning personnel who determine if corrective action, either expensed as operating or included as capital, is required.

Additionally, Long Term Asset Planning personnel may initiate condition assessments of existing equipment and determine whether corrective action is required when information is obtained through different sources than those outlined above. These sources may include operating personnel, vendors, industry related groups and literature. This information may relate to such situations as changes to safety practices, reports of performance indicating that an asset is approaching end of service life, industry experience identifying new equipment issues, and manufacturers withdrawing product support (obsolete equipment) resulting in Hydro being unable to obtain spare parts and obtain technical expertise to maintain the equipment . Corrective actions may be required immediately, or may be executed at a future time. Condition assessment and practices specific to an asset classification are outlined in the corresponding program described later in the Asset Management Overview.

4.2 Program Types and Timing

The programs in the Asset Management Overview are primarily focused on the capital overhauls and the execution of corrective actions required by each asset classification. As the implementation of corrective action increases or is projected to increase, a program will be added to the Asset Management Overview. Due to the volume and complexity of hydraulic generation assets, capital corrective actions are required that do not warrant the establishment of a long-term capital program.

For each asset classification, these activities are captured under the section titled "Other Sustaining Activities". Capital corrective actions that are aligned with the Asset Management Overview philosophies and practises as well as capital work which will result in economic savings, but do not reside within an established capital program, will be included in this program. Examples of capital work that could be included under Other Sustaining Activities are:

1) Deteriorated systems, equipment, components or material approaching the end of their service life;
2) Systems, equipment, and components for which manufacturers have withdrawn product support or industry experience has identified new performance issues;
3) Changes to safety practices on existing infrastructure; and
4) Replacement of existing assets with economically justified replacements.

In the Hydraulic Generation Refurbishment and Modernization Project submitted with each CBA, the "Other Sustaining Activities" items, with associated costs and a brief explanation of the work, will be provided for the Board's review.

The timing of capital overhauls is determined by Long Term Asset Planning personnel after considering various factors including asset performance, safety concerns, frequency of operation, criticality, condition, corrective actions required, operating constraints and geographic location. More information on how timing is determined is presented in Appendix C. Execution of capital corrective actions which align with philosophies and practises outlined in the Asset Management Overview will be included in the "Hydraulic Generation Refurbishment and Modernization Project" or in the "Hydraulic Generation In-service Failures Project". Immediate corrective actions stemming from an approved Hydraulic Generation Refurbishment and Modernization Project which can be accomplished within the project scope and budget may proceed within that project.[2] Future corrective actions would be included in the "Hydraulic Generation Refurbishment and Modernization Project" submitted in a future Capital Budget Application.

[2] Immediate action which cannot be accomplished within the scope and approved budget of an approved Hydraulic Generation Refurbishment and Modernization Project would be addressed either through the Hydraulic Generation In-Service Failures Project or through a Supplementary Capital Budget Application.

4.3 Asset Classification Description

Each asset classification section includes a high level functional description of the group's assets. More information about the infrastructure, systems, equipment, and components in an asset classification is provided in Appendix A: Full Asset Description.

4.4 Hydraulic Generating Units Asset Classification

Hydro's Hydraulic Generating Units Asset Classification consists of:

- Generators;
- Governors;
- Isolated Phase Buses;
- Spherical Valves;
- Turbines;
- Exciters; and
- Metering, Monitoring, SCADA, Protection and Control Equipment.

Figure 2 is a cross-section of a Hydraulic Generating Unit.

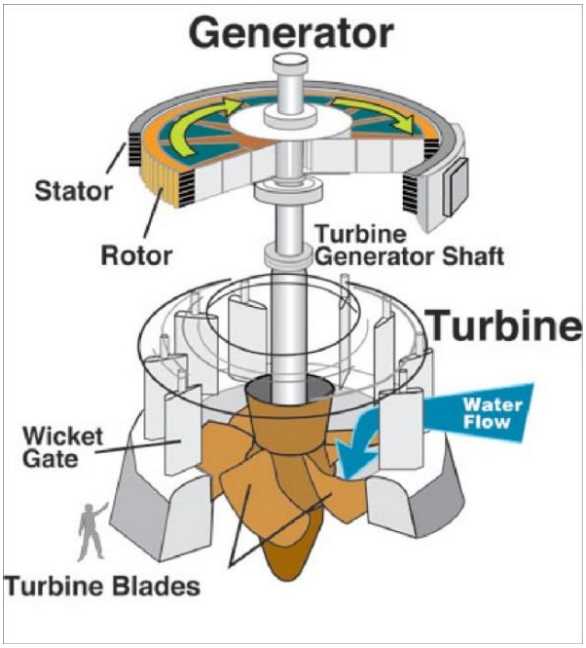

Figure 2: Hydraulic Generating Unit

Flowing water is directed from a penstock through a main inlet valve (where equipped) and into a spiral case, which encircles the turbine runner. The wicket gates direct water from the spiral case into the turbine runner (noted as turbine blades in Figure 2). The water turns the turbine runner and then flows into the draft tube attached to the turbine. The water passes through the draft tube and on to the tailrace to exit the generating station. A shaft connects the turbine runner and the generator rotor. Turning the runner causes the rotor to turn. Electrical interaction, created by the unit exciter system, between the stator and the moving rotor produces electricity for transmission to customers. A unit governor system controls the flow of water, by way of the wicket gates, to ensure an appropriate amount of water is passing through the turbine so as to supply the electrical power required from the generator. The electricity is passed from the generator to the electrical transmission system outside the hydraulic generation station through an electrical isolated phase bus system. Rotating equipment requires lubrication, so the unit has an automatic greasing system. Hydraulic generating units have protection, control, instrumentation, condition monitoring, SCADA[3] and metering equipment to ensure safe, reliable operation and asset management data for the unit.

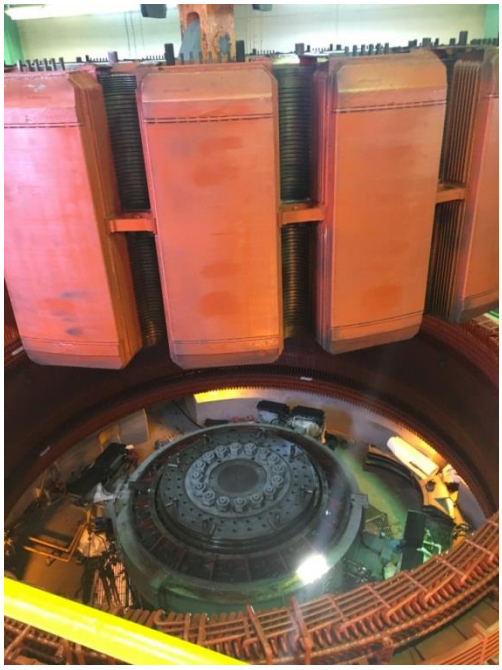

Figure 3: Dismantled Generator

[3] Supervisory Control and Data Acquisition ("SCADA") systems gather information from the field, transfer the information back to a central site, alert the central site of abnormal system conditions, perform necessary analysis and control, and display information to operators. Operators interface with the SCADA which connects to equipment in the field.

4.4.1 Turbine and Generator Six Year Overhauls Program

The Six-Year Overhaul involves a partial dismantling of the turbine and generator to inspect, test, clean, refurbish the units. This may entail replacing defective components and, as required, undertaking corrective refurbishment or replacement action. The generator activities involve activities such as cleaning and inspection of rotor and stator assembly, electrical testing on rotor/stator assembly and calibration and testing of turbine and generator protection devices. The turbine activities involve such activities as verification of bearing and seal clearances and testing and calibration of turbine protection, control and monitoring devices. During these overhauls, due to the dewatering of the unit, the draft tube and penstock are also inspected.

4.4.2 Turbine Major Refurbishment Program

The Turbine Major Refurbishment occurs on approximately a 15 to 25-year cycle and involves completely disassembling, inspecting, testing, assessing the turbine mechanical components and, as required, carrying out corrective work to refurbish or replace components to maintain the turbine performance until the next major refurbishment. As the unit is dismantled for the turbine major refurbishment, this offers an opportunity to carry out, if required, other sustaining work on the unit, including:

- Inspection and replacement, as required, of the head cover and bottom ring bushings;
- Inspection and, as required, replacement of the operating ring bearing;
- Replacement of wicket gate V packing;
- Replacement of various gaskets and seals;
- Refurbishment of runner due to cavitation damage;
- Machining of other unit surfaces as required based on condition assessments; and
- Testing and calibration of turbine protection, control and monitoring devices.

In the past, concrete growth in the turbine foundation and the resulting erosion caused movement of the turbine lower primary stationary seal. This could cause contact between the stationary and rotating seals and require a full dismantling of the unit to correct. Therefore, as required, grouting and machining of the upper and lower primary seals is also included in the Major Turbine Refurbishment.

4.4.3 Generator Refurbishment Program

Hydro's generator stator windings have an anticipated service life of 40 years. As a unit approaches the end of its expected service life, a condition assessment is carried out. These assessments reveal signs of electrical deterioration such as seeping asphalt or cracked insulation, or mechanical deterioration such as shifting windings as a unit approaches the end of its useful life. At this point, Hydro takes action to replace the windings. Hydro undertook work to replace generator stator windings due to stator mechanical and electrical deterioration from 2009 to 2014. Future work of a similar nature will be completed within this program.

4.4.4 Spherical Valve By-Pass Refurbishment Program

Since 2013, Hydro has completed five spherical valve by-pass refurbishment projects due to deterioration and poor operating performance of the by-pass valve and control system. As the spherical valve by-pass reach the end of their service life, the valves begin to malfunction and become prone to failures due to seized internal components. Future work of this nature will be undertaken within this Program.

4.4.5 Exciter Replacement and Refurbishment Program

Hydro has undertaken ten exciter replacements due to a withdrawal of manufacturer product support. Future work to replace or refurbish existing exciters will be completed within this program.

4.4.6 Automate Generator Deluge Systems Program

Since 2013, Hydro has been automating the deluge systems at Bay d'Espoir. Future work to automate the remaining systems will be completed under this program.

4.4.7 Refurbish Generator Bearings Program

Since 2013, Hydro has been refurbishing the generator bearings and housings to eliminate oil loss from the bearing housing. Future work of this nature will occur under this program.

4.4.8 Replace Auto Greasing Systems Program

As the auto-greasing system on a generating unit ages, it becomes prone to issues such as solenoid failures, damaged timers and switches, and leaking tubing. On older units, the unavailability of replacement components makes maintenance of the systems difficult. Since 2013, Hydro has replaced six automatic greasing systems due to deterioration, incompatibility with new controllers, and on-going maintenance issues. This program will be used to undertake future work of this nature.

4.4.9 Replace Unit Metering, Monitoring, Protection, SCADA and Control Assets Program

In 2016, the Bay d'Espoir Unit 7 vibration monitoring system was replaced to improve condition monitoring of Unit 7. The previously installed vibration monitoring system was unreliable. The new monitor has increased the diagnostic information available to asset management and maintenance personnel. Hydro plans additional work starting in 2018 to replace the other monitors on Bay d'Espoir Units 1 to 5 because the monitors are obsolete. The new monitors will allow long-term trending of data. Hydro will replace protective relays, annunciators, human-machine interfaces, other metering, monitoring, protection, and control equipment as it becomes obsolete, fails or operate unreliably, to ensure reliable operation of protective devices.

In 2017, a multi-year project to install a new Asset Health Monitor system, for Upper Salmon, started. The new Asset Health Monitor system will gather diagnostic data from the generating unit and provide trending analysis for asset management and maintenance personnel. Hydro plans additional work starting in 2018 to replace obsolete monitoring devices on Bay d'Espoir Units 1 to 5.
In 2017, Hydro identified control cables in its Hydraulic Generating Station are leaking oil, which is contaminated with PCB's. In 2018, Hydro will start a five year effort to replace the cables and, if required, associated infrastructure.

Air Gap Monitoring measures the gap between the rotor and the stator on a Hydroelectric Generating Unit. Changes in air gap can be influenced by operating conditions such as shaft oscillation, vibration, magnetic and hydraulic forces. Starting in 2009 and continuing to 2014 units 1-4 in Bay d'Espoir have had the stators rewound, see section 4.4.3 of this report. During this work air gap monitors were added to the units for online real time monitoring of the air gaps. Online monitoring of the air gap between the rotor and stator can provide significant and timely information about its physical condition as it changes over time and with different operating conditions.

In 2020, Hydro has proposed to rewind Unit 5 in Bay d'Espoir and add air gap monitoring to this unit. This monitoring device requires a partial dismantle of Unit 5 and is done during the rewind for labour efficiencies associated with unit dismantling. This program will be used to undertake future work of this nature.

In 2020, also combined with the Unit 5 Stator Rewind Project, Partial Discharge ("PD") Monitoring will be upgraded on Unit 5. PD analysis is used to determine the rate and level of degradation of stator insulation. PD Monitoring along with Air Gap Monitoring upgrades are done with this rewind project for labour efficiencies associated with unit dismantling. This program will be used to undertake future work of this nature.

Hydro expects additional replacement of metering, monitoring, protection, and control equipment assets, including wiring, panels and other supporting materials and devices, due to deterioration and obsolescence; and to provide more functional equipment. Work of this nature will be covered by this program.

4.4.10 Other Sustaining Activities

As described in Section 4.2 Program Types and Timing.

4.5 Hydraulic Structures Asset Classification

Hydro's Hydraulic Structures Asset Classification consists of:

- Control Gates;
- Penstocks;
- Surge tanks; and
- Remote Water Level Systems.

Figure 4 is a cross-section of a hydroelectric installation showing the intake gate.

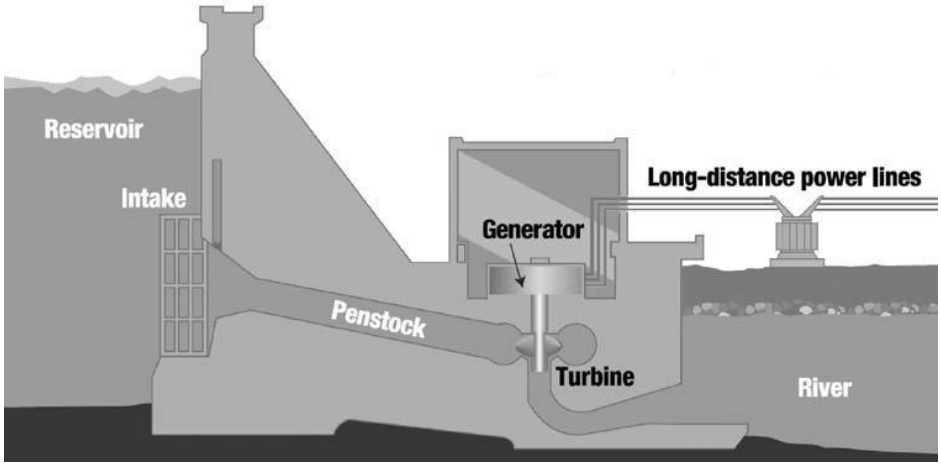

Figure 4: Cross-Section of Intake

Hydro uses hydraulic control structures to control the flow of water from reservoirs. Structures associated with a powerhouse intake control the flow of water from the reservoir into penstocks which transport water to a hydraulic generating unit (shown as a turbine and a generator in Figure 4) to produce electricity. Structures associated with a spillway control the flow of water from the reservoir into a spillway ("Spilling"). Spilling, when required, is done to avoid damage to the reservoir dams or dykes caused by excessive water in the reservoir. Hydro's control structures consist of structural, mechanical, and electrical systems. The water flows through the concrete structures and the mechanical systems incorporated into the concrete structure. The mechanical systems controlling the flow of water include vertical sliding gate, a gate hoist, gate rollers, seals, and embedded steel parts in the concrete to allow movement of the gate by the hoist. Electrical systems include heaters to prevent icing of the mechanical systems in the concrete structure, power supply systems and control systems for the gate equipment. The stoplogs are mechanical systems of wood or steel members placed by lifting devices between control structures and the reservoirs so as to stop water from flowing through the concrete structures when the mechanical gate systems are being worked upon. Hydro has 21 hydraulic control structures, which incorporate 40 gates.



Figure 5: West Salmon Spillway Control Structure

A penstock is a large pipe, most commonly constructed of welded steel, which conveys water from a reservoir to turbine. Serving the hydraulic units Hydro has eight steel and one wood stave penstock and three arrangements with penstock/power tunnel combinations.

Some hydraulic generating stations, with high head designs, have surge tanks are connected to penstocks to neutralize the impact of sudden changes in pressure on the penstock caused by operation of the station. Water flows into the tank when the penstock water pressure increases and out of the tank when penstock pressure decreases, thus mitigating the effects of water hammer on a penstock. Hydro has four surge tanks in two hydraulic generating stations.



Figure 6: Surge Tanks at the Bay d'Espoir Hydraulic Generation Station

The primary preventive maintenance procedure for Hydraulic Structures is a yearly inspection. Based upon condition, overhauls are performed on a 10-15 year frequency.

4.5.1 Refurbishment and Replacement of Control Gates Infrastructure Program

Failure of subcomponents of control structures can result in safety hazards, equipment damage, or the inability to operate gates as required. The failure of the gate control system has resulted in the filling of the penstock too quickly, creating hazardous conditions; the failure of gate heaters can result in mechanical components freezing, resulting in their failure to operate. Since 2009, Hydro has undertaken control gate refurbishments in Hinds Lake, Upper Salmon, and Bay d'Espoir for intake structures and at Salmon River, Victoria and Burnt Dam for spillway structures. This work has included structural, mechanical, electrical and control system work. Future refurbishment work will be executed through this program.

4.5.2 Refurbish Surge Tanks Program

Hydro carries out progressive inspections monthly and annually on surge tanks, and a major inspection every six years. Based on these inspections, Hydro determines whether corrective action is required. Over time, protective coatings degrade, resulting in increased corrosion which, if left unmitigated, may result in leaks or structural failure of the tanks. Failure of the cathodic protection and protective coating of the surge tanks resulted in corrosion on the Bay d'Espoir assets. In 2014, 2015, and 2016, Hydro completed projects to refurbish the surge tanks. Future refurbishment work on any surge tanks will be covered by this program.

4.5.3 Penstock Inspection Program

Issues experienced with Bay d'Espoir Penstocks 1-3 in 2016 and 2017 have compelled Hydro to make significant changes to its inspection frequency and scope for all hydraulic unit penstocks. Gaps were found in penstock inspection frequency for all Hydro's penstocks. Penstock inspection frequency was determined with assistance from ASCE Steel Penstocks, 2012 manual as well as CEATI Penstock Inspection 2017 report. Using criteria set out by both of these organizations for comprehensive internal inspections, Hydro has set up a framework to carry out internal inspections for all penstocks.

4.5.4 Other Sustaining Activities

As described in Section 4.2 Program Types and Timing.

4.6 Reservoirs Asset Classification

Hydro's Hydraulic Reservoirs Asset Classification consists of:

- Dams;

- Dykes;
- Power canals;
- Spillways;
- Control weirs;
- Fuse plugs;
- Tunnels;
- Instrumentation; and
- Public safety control measures.

Figure 7 is a general cross-section of an embankment type dam.

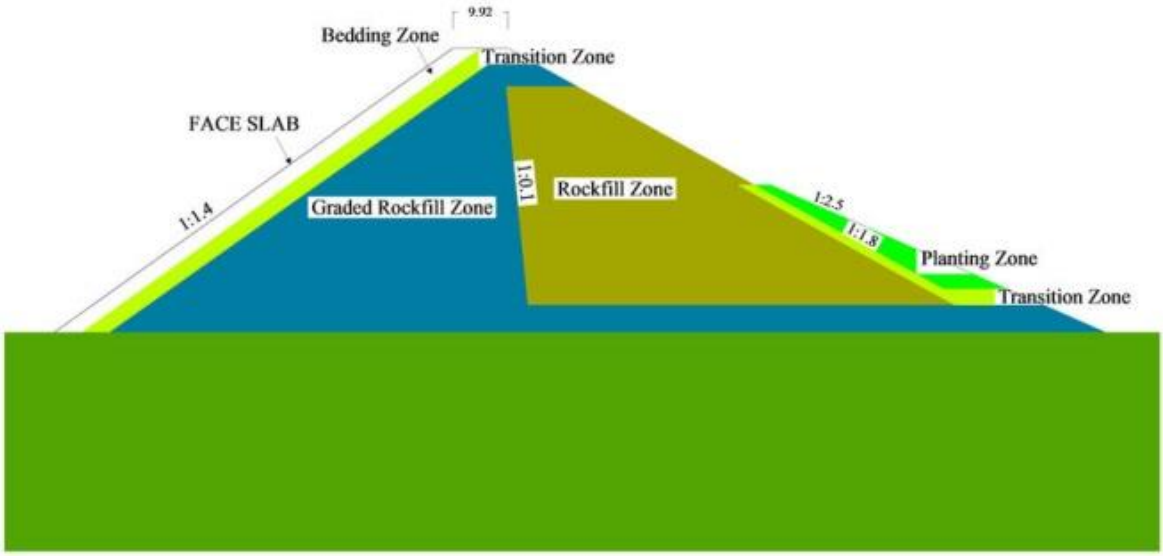

Figure 7: Dam Cross-Section

Dams and dykes are constructed to increase the storage capacity of the reservoir. The majority of Hydro's dams are embankment type structures. The largest structure is 63m high. Power canals are typically a dyke lined canal developed to convey water between reservoirs, or from a reservoir to an intake structure. Passive overflow spillways are dams that are built to spill water from a reservoir at a specific elevation. Overflow spillways in Hydro's system are constructed of rock fill with steel sheet pile cores, concrete or timber crib. Control Weirs are low head concrete overflow spillways that maintain the water elevation upstream of the weir to within a specified range. Fuse plugs are sections of dams that

are constructed of earth materials and designed to fail in a controlled manner without damaging adjacent larger, more critical dams. Power tunnels convey water, through rock, from a reservoir to an intake structure. Diversion tunnels divert water around the work site. Dam instrumentation provides measurements for comparison to the dams design criteria.



Figure 8: Hinds Lake Power Canal

Hydro has approximately 80 dykes and major structures in this classification. Hydro carries out preventive maintenance activities at various frequencies for different asset types. For instance, dam-type assets are visually inspected biweekly and undergo semi-annual engineering inspections.



Figure 9: Safety Boom and Signage

4.6.1 Upgrade Public Safety around Dams and Waterways Program

Public safety risks are determined by completing risk assessments in accordance with the Canadian Dam Association's Dam Safety Guidelines, 2007 that includes guidelines for public safety and security around dams. Appropriate control measures are then installed to reduce the safety risk to the public. These measures include such items as signage, fencing, audible or visual alarms, booms and buoys (as shown in Figure 9), operational changes and public education. Hydro has conducted seven public safety projects since 2011. Future work to further enhance public safety around Hydro dams and waterways will be undertaken through this program.

4.6.2 Other Sustaining Activities

As described in Section 4.2 Program Types and Timing

4.7 Site Buildings and Services Asset Classification

Hydro's Site Buildings and Services Asset Classification consists of:

- Water distribution systems;
- Fuel storage and distribution systems;
- Powerhouse buildings;
- Service buildings;
- Helicopter Pads;
- Site fencing and gate controls;
- Parking lots;
- Stairways; and
- Site access roads.



Figure 10: Paradise River Generating Station

Water distribution systems collect, transmit, treat, store, and distribute domestic water. Fuel storage and distribution systems handle diesel, helicopter, and gasoline fuels. Powerhouse buildings contain the hydraulic generating unit and the unit auxiliary mechanical and electrical equipment. Service buildings are other building required for a hydraulic generating station, which includes warehouses, maintenance buildings, training facilities, site accommodations, and security offices. Helicopter pads allow helicopters to use relatively flat, clearly marked hard surfaces away from obstacles to land and take off safely. All sites have fencing and/or gates with controls to maintain site security and public safety. The parking lots and stairways provide vehicle parking and safe access to facilities. Site and access roads allow access to hydraulic generation locations, such as generating stations and dams.

Site Buildings and Services assets are inspected and, where applicable, tested annually.

4.7.1 Access Road Refurbishment Program

Since 2010, Hydro has undertaken four projects to refurbish access roads to its hydraulic generating stations to maintain safe access to Hydro sites. Refurbishment was necessary due to deterioration caused by insufficient drainage, washouts, or the need for additional road topping material. Hydro expects to undertake similar work in the future and will execute it within this program.

4.7.2 Diesel Fuel Storage Refurbishment and Replacement Program

Hydro has 19 diesel fuel storage tanks at its hydroelectric generating stations. These are subject to deterioration, such as reduced wall thickness and corrosion discovered during routine tank inspections. Tanks are also subject changing government regulations. Hydro will use this program to refurbish or replace tanks when deteriorated and to comply with Government regulations. Hydro has tanks in remote locations and since 2007 has installed remote monitoring on some of those tanks. If required to add remote monitoring to other tanks, Hydro will undertake this work within this program.

4.7.3 Draft Tube Deck Refurbishment Program

A draft tube deck is a common feature in a hydroelectric plant. The draft tube is where the exhausted water from the hydro unit exits and is directed to the tailrace. The draft tube deck is a reference to the full structure including the substructure, exit water channels, and the deck above that can be driven over or has walk access to install draft tube gates. Draft tube gates are used to isolate the hydro unit by preventing tailrace water from coming back up through the unit. For Example: The draft tube deck in Bay d'Espoir is 97 meters long, and is made up of reinforced concrete columns, pre-cast deck beams and pre-cast deck slabs, topped with a six inch concrete distribution slab and finished with 50 mm of asphalt. The structure allows for vehicles to access Powerhouse 2 on site and the substructure of the deck channels water from the draft tube of the hydro unit to the tailrace.

Over time concrete degrades and the structure experiences wear due to weather and water erosion. Once this damage occurs, refurbishment of the structures is required to ensure the reliable operation of the hydro units. Future refurbishment work on any Draft Tube Deck will be covered by this program.

4.7.4 Other Sustaining Activities

As described in Section 4.2 Program Types and Timing

4.8 Common Auxiliary Equipment Asset Classification

Hydro's Common Auxiliary Equipment Asset Classification consists of:

- Station service;
- Ancillary AC/DC electrical system;
- Standby diesel generators;
- Cranes;
- Fire protection and detection systems;
- Powerhouse public address systems;
- Compressed air systems;
- Service/cooling water systems;
- Domestic water systems;
- Drainage/unwatering systems;
- Water level systems;
- Heating, ventilation, and air conditioning systems;
- Waste oil storage tanks; and
- Lube oil storage.

Figure 11 is a picture of the Bay d'Espoir Station Service Transformers. This is one of many examples of auxiliary equipment required for Hydro's daily operations.



Figure 11: Bay D'Espoir– Station Service Transformers

Station service system uses transformers and other equipment to convert AC electricity to a voltage acceptable for use in the ancillary AC/DC electrical system which distributes electricity to ancillary equipment needed in the operation of the hydraulic generating station. Standby diesel generators are installed at locations that require electricity for operations, for use if the primary power supply is interrupted. Cranes are used during maintenance and capital work. Fire protection and detection systems are installed to protect people, buildings, power transformers, generators, and other equipment. Powerhouse public address systems allow communication within a noise working environment. Compressed air systems provide pressurized air to equipment that requires pressurized air to operate, such as governors, and spherical valves. Service/cooling water systems are used to remove heat from turbines and generators, particularly bearings and generator stators. Domestic water systems supply water where water is needed. Drainage/Unwatering Systems remove water from the hydraulic generating unit to allow access to the turbine. Water level systems provide water level monitoring in streams, lakes or reservoirs. Air conditioners control the temperature for personnel and equipment.

Heating, ventilation and air conditioning ("HVAC") systems also provide humidity control for humidity-sensitive electrical equipment. Ventilation systems remove waste heat generated by generating units, and circulate fresh air using ducts and fans. Waste oil storage tanks hold used oil for disposal. Lube oil storage are laydown areas for the 200 litre drums of lube oil that are located at most generating stations.

There is a mixture of time based preventive maintenance procedures ranging from weekly to yearly, and a mixture of operational hour preventive maintenance procedures ranging from 500 to 2000 hour checks used to assess and maintain these assets.

4.8.1 Station Service Refurbishment and Replacement Program

Station service systems in Hydraulic Generating Stations are complex systems comprised of a number of subsystems. Devices such as reclosers and circuit breakers require replacement as they become obsolete, resulting in the unavailability of replacement parts required to maintain equipment or operate unreliably. Equipment may require replacement to reduce fault levels, and arc-flash levels, or improve protection coordination, either of which may result in safety hazards or equipment damage if left unmitigated. Electrical equipment, such as transformers, is prone to insulation breakdown and other deterioration as it reaches the end of useful service life and require refurbishment or replacement. In 2015, 2016 and 2017, station service electrical equipment was replaced at Cat Arm and Bay d'Espoir due to operational failures, deterioration, and weak protective coordination between devices. Hydro expects work like this will occur in the future and will undertake that work under this program.

4.8.2 Service/Cooling Water Refurbishment and Replacement Program

Over time, cooling water pipes can become clogged with organic slime and hardened organics that attach themselves to the pipe walls causing the cooling water flows to decrease significantly. Additionally, older cooling water pipes are constructed of mild steel, which is prone to corrosion over time. Since 2009, Hydro has undertaken 11 projects to replace cooling systems and piping, pump, and instrumentation components due to pipe fouling from material build up and corrosion. Future capital work on service/cooling water systems will be undertaken within this program.

4.8.3 Air Conditioning Refurbishment and Replacement Program

Hydro has refurbished or replaced air conditioning systems and improved ventilation in four projects due to obsolescence, resulting in the unavailability of replacement components require to maintain

units. Air conditioning systems are also replaced or upgraded due to increased cooling requirements. Future capital work for this will be executed through this program.

4.8.4 Standby Generator Refurbishment and Replacement Program

Since 2009, Hydro has replaced three standby generators at Bay d'Espoir due to poor performance and the inability to reliably supply station service power in an emergency. Primary power diesel generators have been replaced at the Burnt Dam and Victoria Control Structure locations. Diesel generators require an engine overhaul based on operating hours and operating performance. Typically, standby diesels rarely require this refurbishment and primary power diesel generators require this refurbishment about every five years. Future replacement and refurbishments of diesel generators will be completed under this program.

4.8.5 Ancillary AC/DC Electrical System Refurbishment and Replacement Program

In 2011 and 2013, Automatic Transfer Switches were replaced at Bay d'Espoir and Hinds Lake due to operational failures. In 2015, Hydro started the installation of Infrared Inspection Viewports in electrical equipment at various hydraulic generating stations to allow safe inspection of the equipment while energized. Installations of the viewports will occur under this Program. In addition, Hydro expects that the replacement and refurbishment of ancillary AC/DC electrical assets will continue to maintain a reliable supply of electricity. In the future, this work will occur under this program.

4.8.6 Other Sustaining Activities - Common Auxiliary Equipment Program

As described in Section 4.2 Program Types and Timing

Appendix A

Full Asset Description

newfoundland labrador hydro
a nalcor energy company

Hydraulic Generating Units

Generator

A generator is an electric rotating machine that transforms mechanical power from a hydraulic turbine into electric power.

Stator Assembly

A stator consists of a core and a frame; it is the stationary part of a machine that serves as both a magnetic circuit and a supporting member. The core is made up of sheets of electrical steel; the sheets, which are 0.35–0.5 mm thick and insulated with varnish, are formed into stacks and fastened in the cast or welded frame. Stator windings fit into slots made in the core. The stator is cooled with surface air coolers, which are heat exchangers that have cooling water flowing through which cool the hot air blown around the stator.

Rotor Assembly

The rotor consists of a fabricated spider, laminated rim, field poles and windings, a brake ring and collector rings.

Thrust and Guide Bearing

The thrust and guide bearing combination on the generator sustains axial and lateral loading and prevents axial and lateral movement. The bearing consists of a segmented guide bearing, thrust block, rotating ring, segmented spring-supported thrust bearing, base ring, oil reservoir, cooling coils, alarm devises, and a high pressure oil injection system for start-up (if equipped).

Cooling Water System

The cooling water system supplies water to the thrust and guide bearing cooling coil to cool the oil reservoir. The cooling water also supplies the surface air coolers in the generator to cool the stator and rotor by air circulation within the generator.

Governor

The governor serves to keep the speed of the hydro unit constant in order to maintain the systems frequency of 60 hertz. Any change in load or other operational disturbances will cause the governor to open or close the wicket gates to allow more or less water to maintain the constant speed of the Hydro Unit.

Governor Speed Generators

Speed control is one of the primary functions of a governor. On Mechanical governors, a set of rotating flyballs, opposed by a spring, controls the position of a valve. The valve controls the flow of oil to a servomotor that controls the wicket gates. Any change in speed will cause the valve to be moved off its centered position, making the gates open or close, and changing the unit's speed. Modern electronic governors control the gates by monitoring electronic signals from speed sensors.

Governor Pump

The pump used by the governor to port oil through the governing system.

Governor Piping System

The network of pipes required to deliver the governor oil to the desired location.

Accumulator Tank

An accumulator tank stores oil for the governor system and is pressurized by air.

Servomotor Assembly

The servomotors are hydraulically actuated pistons, controlled by the governor, that move the linkages connected to the wicket gates to allow water regulation to the hydraulic generating unit to maintain a constant speed.

Isolated Phase Bus

Isolated phase bus is the current carrying conductors used to transmit large currents. For Hydro's generation sites, it is the means used to carry the current from the generators to the step-up transformers. The conductors are individually contained within housings to provide electrical and physical protection and to minimize the possibility of faults.

Disconnect Switch

Disconnect switches are used to electrically isolate the isolated phase bus either for maintenance activities or troubleshooting. Proper operation of these switches is essential for the establishment of a safe work environment and for reliable and secure system operation.

Grounding Switch

Grounding switches are used to provide a safe and secure electrical connection between a piece of equipment and ground. Proper grounding of equipment is essential for the establishment of a safe work environment.

Buswork

Buswork is the current carrying conductors which provide connections for the electrical circuits.

Main Inlet Valve

Main Inlet Valves are mainly employed in power plants with more than one generating unit sharing a common penstock. When one penstock is used to supply two or more generating units these valves are installed on each unit to provide isolation from the penstock water supply. This allows the operation of one unit while the other unit is down for maintenance or in stand-by. Most of Hydro's Main Inlet Valves are of the spherical valve type.

Turbine

A turbine is a rotary machine that converts kinetic energy and potential energy of water into mechanical work. Components of the turbine include:

Runner

Flowing water is directed on to the blades of a turbine runner, creating a force on the blades. Since the runner is spinning, the force acts through a distance, which is the definition of work. In this way, energy is transferred from the water flow to the turbine.

Draft Tube

In power turbines a diffuser tube is installed at the exit of the runner, known as draft tube.

Guide Bearing

The guide bearing on the turbine sustains lateral loading and prevents lateral movement. The bearing consists of a segmented guide bearing, oil reservoir, cooling coils, and instrumentation to monitor bearing temperature and oil levels within acceptable ranges.

Auto-greasing System

The auto-greasing system delivers controlled amounts of lubricant to multiple locations on a hydraulic generating unit while the machine is in operation.

Turbine Shaft and Coupling

The turbine shaft is the portion of the hydraulic units' shaft that is connected to the turbine. The shaft coupling joins the generator shaft to the turbine shaft.

Scroll Case

A spiral-shaped steel intake guiding the flow into the wicket gates located just prior to the turbine.

Headcover Assembly

The headcover is the top stationary part of a hydraulic turbine that encloses the system.

Wicket Gates and Linkages

Adjustable elements that control the flow of water from the scroll case into the turbine passage by the linkages connected to the servomotors.

Excitation

Excitation Transformer

The excitation transformer is a part of the excitation system. It is used to convert the generator terminal voltage to a lower voltage which supplies the rectifier. The excitation system creates the DC energy for the rotating magnetic field in the generator to enable conversion of mechanical energy into electrical energy. Without an excitation transformer, a generating unit is not able to produce electricity.

Field Breaker

The field breaker is a circuit breaker used to isolate the power supply between the excitation system and the generator rotor. The field breaker performs switching actions to complete, maintain, and interrupt current flow under normal or fault conditions. The reliable operation of the field breaker through its fast response and complete interruption of current flow is essential for the protection of the excitation system.

Metering, Monitoring, Protection, SCADA and Control

Ground Cubicle

Minimizes fault damage incurred by generators, and maintains sufficient fault detection to improve power system reliability.

Auto Control Panel

The auto control panels are where control or monitoring instruments are displayed. This is where operators interface with the generating unit.

Synchronizing Panel

Synchronization panels are mainly designed and used to meet power system requirements. These panels function both manually and with an automatic synchronizing function for one or more generators or breakers. They are widely used in synchronizing generators.

Temperature and Frequency Control Panel

This panel displays the temperature and frequency of the hydro unit.

Time and Frequency Clock

Highly sensitive equipment used to measure the time and frequency of the unit.

Oscillogragh

An Oscillogragh is a device for recording oscillations, especially those of an electric current.

Voltage and Megawatt Panel

This panel displays the voltage and megawatt output from the hydro unit.

Recorder

The recorder records the voltage and megawatt readings of the unit.

Control Cables and Junction Boxes

Control cables connect various circuits for the operation of each generator. Junction boxes are also located along cable paths where it is practical to terminate cables from various sources.

Vibration Monitoring System

Hydro Unit systems

For Hydro Units vibration sensors are mounted on the critical bearings and wired to the plants computer system or to a dedicated vibration monitoring system. Two alarm levels (soft and trip) are then set to alert the operator that maintenance attention is needed or in the case of a Trip Alarm to shut the machine down to prevent failure.

Handheld Units

Handheld vibration units use magnetic vibration sensors that are directly connected to the equipment to monitor vibration and record data. This data can then be downloaded to a computer for analysis.

Data Acquisition System

This system measures an electrical or physical phenomenon such as voltage, current, temperature, pressure, or sound with a computer. The system consists of sensors, measurement hardware, and a computer with programmable software.

Hydraulic Structure

Substructure

The substructure is the underlying or supporting structure, such as the concrete foundation.

Superstructure

The superstructure is the components of a hydraulic structure that are on top of the substructure. This includes components such as the structural steel, hoists and motors for the gates.

Gates

The structure gates are designed to hold back water. In a spillway the water is on one side and the other side is typically dry when the gates are closed. Depending on the function of the particular structure, the gates are opened to move water from one reservoir to another, or to spill water from the reservoir when the water level exceeds the maximum safe level.

Stoplogs/Master logs

The stoplogs are a set of wooden or steel logs that are put in place by a crane or hoist with the help of a lifting device called the master log. The stop logs act as a temporary measure to isolate the water side of the gate for maintenance.

Gate Hoist

A gate hoist is a device used for lifting or lowering a gate by means of a drum or lift-wheel around which a wire rope or chain wraps.

Gate Rollers, seals, and embedded parts

The gate rollers are attached to the gate and roll along the embedded steel in the gains.

Heating Systems

There are three heating systems that can be used in a structure; the first is a gain heater that heats the roller path on the side of the structure and ensures the roller path is free of ice during the winter.. Sill heaters heat the bottom of the gate where it sits on the concrete substructure so that the gate does not

freeze to the bottom during winter. The other heating system is on the gate itself and is called gate heaters. Gate heaters are used to ensure that ice does not form inside the gate and that water side of the gate is free of ice during the winter.

Control Systems

Control systems are typically computer systems designed to control gate systems remotely. Some older technology electronic controllers are used for specific simple control features.

De-icing Systems

In conjunction with the heating systems pother systems are strategically employed to combat ice around gates. Water up lifters are used to agitate the water close to the surface of the gate to inhibit the formation of ice. Bubbler systems use compressed air to lift warmer water at lower levels in the reservoir to prevent the formation of ice cover or to remove ice build-up on trash racks.

Penstock

A penstock is a channel for conveying water to a turbine, commonly constructed of steel, wood, or rock.

Surge Tank

A surge tank is a tank connected to a penstock carrying reservoir water. It is intended to neutralize sudden changes of pressure in the flow by filling when the pressure increases and emptying when it drops to minimize the effects of water hammer in a penstock.

Heating Systems

The surge tank heating system prevents the stagnant water in the surge tank from freezing in the winter. If surge tank water freezes, water can't flow freely to avoid water hammer.

Relief Valves

Relief values are an alternative to Surge Tanks to minimize the effects of water hammer in a penstock. The use of a Surge Tank or a relief valve is determined during the design stage of a new unit and it is typically not possible to change the design after initial construction.

Coating Systems

Metal penstocks are coated to protect the steel and welds from corrosion due to the water inside and the elements outside of the penstock or Surge Tank.

Drainage Systems

Drain pipes are installed under the penstocks in the bedding material to collect any leakage from the penstocks as well as surface water and any leakage from the intakes/dams.

Water Level Systems

Water level systems are located at hydraulic structures to provide information to operations to make informed decisions about water management and other operating conditions.

Reservoirs

Dams and Dykes

Hydro currently operates more than 100 dams, dykes and hydraulic structures on the island of Newfoundland. Hydro dams are constructed to hold back water and raise its level in order to contain water for electricity generation. The majority of Hydro's dams are embankment type structures with our highest structure being 63m high.

Power canals

Power canals are typically a dyke lined canal developed to convey water from one reservoir to another or form a reservoir to an intake structure.

Passive Overflow Spillways

Passive overflow spillways are dams which are built to spill water from a reservoir at a specific elevation. Overflow spillways in our Hydro system are constructed of rock fill with steel sheet pile cores, concrete or timber crib.

Control Weirs

Control Weirs are low head concrete overflow spillways which maintain the water elevation upstream of the weir to within a specified range.

Fuse Plugs

Fuse plugs are sections of dams that are constructed of earth materials and designed to fail in a controlled manner without damaging adjacent larger more critical dams.

Power Tunnels

Power tunnels convey water, through rock, from an intake structure to a generating station.

Diversion Tunnels

Diversion tunnels divert water around the work site.

Dam Instrumentation

This instrumentation monitors the dam design criteria. Examples of dam instrumentation include piezometers, inclinometers, survey monuments and anemometers. This condition monitoring instrumentation is used to measure movement of the dam structure and water content in the dam.

Public Safety Around Dams Control Measures

Public safety risks are determined by completing risk assessment in accordance with Canadian Dam Association ("CDA") guidelines for Public Safety Around Dams. Control measures are then recommended to reduce the risk to the public. These measures include such items as signage, fencing, audible or visual alarms, booms, buoys, operational changes and public education.

Site Buildings and Services

Water Distribution System

A water distribution system is a system for the collection, transmission, treatment, storage and distribution of water from source to site locations.

Piping

The network of pipes required to deliver the site water to the site facilities.

Pumps

The driver of the water from the source is by pumps.

Storage Tanks

Storage tanks hold water to provide a consistent water pressure at site facilities and a volume of water that can be used for firefighting.

Filters

To remove sediment and fine particles from the water filtration systems are used.

Fuel Storage and Distribution System

Fuel Storage and Distribution System are site specific systems to have fuel and distribution methods on site.

Diesel Fuel Tank

Tanks that house diesel fuel only.

Gasoline Fuel Tank

Tanks that house gasoline fuel only.

Jet Fuel Tank

Tanks that house jet fuel only.

Fuel Dispenser and Pumps

Apparatus used to dispense and meter the fuel.

Powerhouse Building

Buildings used to house hydraulic generating units and the auxiliary mechanical and electrical equipment required for the generation of electricity.

Vertical Lift Equipment Doors

Vertical Lift Doors are large doors that allow access to the powerhouse building for large material and equipment. The doors are operated manually or electrically by a counter weight arrangement.

Roof

The roof is the structure forming the upper covering of a powerhouse building.

Substructure

The substructure is the underlying concrete support of the powerhouse.

Superstructure

The superstructure is the building that is placed upon the substructure. This includes the concrete and steel that make up the walls of the building.

Service Buildings

Service buildings are any other building on site that supports Hydro's generation of electricity. This includes warehouses, maintenance buildings, training facilities, site accommodations, and security facilities.

Substructure

The substructure is the underlying concrete support of the service building.

Superstructure

The superstructure is the building that is placed upon the substructure.

Septic System

A septic system stores and distributes sewage. This includes a septic tank, septic field and all associated distribution piping.

Garage Doors

A garage doors is a large door on a service building that opens either manually or by an electric motor. These are typically overhead doors similar to automotive garages or residential attached garages.

Exhaust Systems (Welding)

Wielding exhaust systems are ventilation systems, in maintenance buildings, that specifically circulate fresh air using ducts and fans in the area to ensure worker safety.

Ventilation Systems

Ventilation systems circulate fresh air using ducts and fans.

Security Systems

A security system detects and issues an alarm due to an intrusion or unauthorized entry. Security systems are also used to prevent unauthorized access to Hydro facilities.

Helicopter Pad ("Helipad")

A helipad is a landing area or platform for helicopters and powered lift aircraft. While helicopters and powered lift aircraft are able to operate on a variety of relatively flat surfaces, a fabricated helipad provides a clearly marked hard surface away from obstacles where such aircraft can land safely.

Site Fencing and Gate Controls

All sites have fencing and or gates with control to maintain site security and public safety.

Parking Lots and Stairways

The parking lots and stairways are areas for staff, contractors and the general public to park vehicles for safe access to Hydro's facilities.

Site and Access Roads

Site and Access Roads are used to allow access to specific locations, such as generating stations, terminal station, hydroelectric dam, and all Hydro locations.

Drainage

Drainage is the sloping of land to divert water away from a specific area.

Culverts

Culverts allow the passage of water through/under a road.

Bridge

Bridges are structures used to span sections of site roads over a stream, river, valley, canal, or any obstacle preventing access to the site location.

Common Auxiliary Equipment

Station Service

A station service switchboard is an electrical panel used to supply low voltage power to the critical and auxiliary electrical equipment necessary for the operation of the generating units. The protective devices included within the station service switchboards are required to monitor the flow of electricity and to interrupt this flow, in a selective and timely manner, in the event of an electrical fault.

Station Service Transformers

Station Service Transformers convert electricity from higher voltages to voltages used in the ancillary AC/DC Electrical system.

Circuit Breakers

Circuit breakers perform switching actions to complete, maintain, and interrupt current flow under normal or fault conditions. The reliable operation of circuit breakers is essential for the protection of the critical and auxiliary equipment supplied by the station service switchboard.

Disconnects and Switches

Disconnects and switches are used to electrically isolate equipment for maintenance activities or troubleshooting. Proper operation of these switches is essential for the establishment of a safe work environment and for reliable and secure system operation. Faulty and/or malfunctioning disconnects or switches that do not operate properly create a safety hazard.

Grounding Transformers

Grounding transformers are used to provide a ground path for the station service systems. This ground path ensures that the system's neutral is at or near ground potential. The establishment of a suitable

ground enables safe operation of a grounded electrical system, and allows protective devices (like relays or low voltage circuit breakers) to detect and isolate line-to-ground faults.

Instrumentation Transformers

Instrument transformers are used to provide inputs to protection, control and metering equipment required for protection of the electrical equipment supplied from the station service system.

Surge Arrestors

Surge arresters provide overvoltage protection of electrical equipment from lightning and switching surges.

Power Cables and Junction Boxes

Cables to connect station service to switchgear and electrical panels and ancillary equipment. Junction boxes are also located along cable paths where it is practical to terminate cables from various sources.

Ancillary AC/DC electrical system

Switchgear and Panels

Switchgear and Panels are devices which are used to distribute electricity to cables. This equipment protects the cables and equipment from overload and short circuits.

Power Cables and Junction Boxes

Distributes electricity to equipment

Battery Banks and Chargers

Provides DC electricity for DC powered equipment.

Diesel Standby Generator

A diesel generator is the combination of a diesel engine with an electric to generate electrical energy. Prime-power diesels provide power to sites that are not connected to an interconnected distribution system. Emergency diesels are on stand-by at various locations within Hydro's system to ensure system reliability.

Engine

This is the diesel engine used to drive the genset.

Generator

The generator converts mechanical energy from the engine to electricity.

Enclosure

Some diesels are located outside and require an enclosure to house the unit away from the weather.

Cranes

Cranes are machines used for moving heavy objects, typically by suspending them from a projecting arm or beam.

Overhead

An overhead crane consists of parallel runways with a traveling bridge spanning the gap. A hoist, the lifting component of a crane, travels along the bridge.

Monorail

A traveling crane suspended from a single rail.

Gantry

Gantry cranes are a type of crane built atop a gantry, which is a structure used to straddle an object or workspace

Wire Rope

Wire rope is a length of rope made from wires twisted together as strands.

Fire Protection and Detection System

A fire alarm system has a number of devices working together to detect and warn people through visual and audio devices when smoke, fire, carbon monoxide or other emergencies are present.

Transformer Deluge System

A transformer deluge fire sprinkler system is an automated water spray system where the water distribution piping is equipped with open spray nozzles for discharging over a transformer. Deluge systems are connected to a water supply through a deluge valve that is opened by the operation of a smoke or heat detection system.

Fire Panels

A Fire Alarm Control Panel, or Fire Alarm Control Unit, is the controlling component of a Fire Alarm System.

Generator Deluge System

A generator deluge fire sprinkler system is an automated water spray system where the water distribution piping is equipped with open spray nozzles for discharging within the generator. Deluge systems are connected to a water supply through a deluge valve that is opened by the operation of a smoke or heat detection system.

Inergen System

Inergen agent is a mixture of three naturally occurring gases: nitrogen, argon, and carbon dioxide. This system releases the Inergen agent when the system is activated and floods the contained room with the agent to extinguish the fire by decreasing the oxygen concentration below levels required to sustain combustion.

Office Sprinkler System

An office space sprinkler system is a system for protecting a building against fire by means of overhead pipes which convey water to heat-activated outlets.

Passive Fire Protection

Passive fire protection is an integral component of the three components of structural fire protection and fire safety in a building. This protection is used to contain fires or slow the spread of fires.

Powerhouse Public Address System

A public address system is an electronic sound amplification and distribution system with a microphone, amplifier and loudspeakers, used to allow a communication within a loud powerhouse.

Compressed Air System

Compressed air is air kept under a pressure that is greater than atmospheric pressure.

Air Receiver Tank

This is the tank for where the pressurized air is stored until it is required.

Air Dryer

An air dryer is used for removing water vapor from compressed air. The process of air compression concentrates atmospheric contaminants, including water vapor. This raises the dew point of the compressed air relative to free atmospheric air and leads to condensation within pipes as the compressed air cools downstream of the compressor.

Excessive water in compressed air, in either the liquid or vapor phase, can cause a variety of operational problems for equipment using the compressed air. These include freezing of outdoor air lines, corrosion in piping and equipment, malfunctioning of pneumatic process control instruments, fouling of processes and products, and more.

Compressors

A machine used to supply air at increased pressure.

Service/Cooling Water System

Service or Cooling water is the water removing heat from a machine or system.

Pumps

Cooling water pumps distribute the water from the source to the system.

Basket Strainers

Cooling water is sourced from the tailrace or other unfiltered sources and the basket strainer is a closed vessel with cleanable screen element designed to remove and retain foreign particles down to 0.001 inch diameter from various flowing fluids

Piping, valves, and controls

The piping, valves and controls are required components of the cooling water system.

Domestic Water System

Domestic water use is water used for indoor and outdoor site purposes such as washrooms, and kitchens.

Drainage/Unwatering System

This system handles the removal of water from the hydraulic generating unit draft tube for maintenance.

Sump Pumps

The pumping system required to remove the water.

Water Level System

Water level or gauge height or stage is the elevation water in a reservoir.

Air Conditioners

Air conditioners control the temperature in many locations for personnel and equipment. The units also provide humidity control in rooms with sensitive electrical equipment like communication rooms.

Ventilation System

Ventilation systems circulate fresh air using ducts and fans.

PCB Waste Oil and Waste Oil Tanks

These are specifically marked oil tanks that only contain waste oil, once the tanks are full a waste disposal company will come to site to empty the tank. PCB waste oil has to be disposed of properly outside of the province this is why there are two types of waste oil storage.

Lube Oil Storage

Lubrication oil storage includes laydown areas for the 200 litre drums that are located at most generating stations, carrying devices for these drums, and smaller storage containers that are used for top-ups when required. The proper storage for lube oil is important to equipment health because a proper container will limit any air borne particulates or any moisture from contaminating the oil.

Appendix B

Operational Hour and Time Based Activity Background

newfoundland labrador hydro
a nalcor energy company

Time Based Activities

Time based maintenance is maintenance performed on equipment based on a calendar schedule that is planned in advance. Hydro's Time Based PM includes:

- Daily operational checks – running maintenance
- PM 1: Weekly Checks
- PM 2: Bi-Weekly Checks
- PM 3: Monthly Checks
- PM 4: Quarterly Checks
- 120 Day Transformer Inspection
- PM 5: Semi-Annual Checks
- PM 6: Yearly Checks
- PM 8: 3 Year Checks
- PM 9: 6 Year Checks

Note: All the PM checks except for the PM 9 are operating expenditures.

Operational Hour Activities

Operational Hour Preventative Maintenance is performed based on the actual usage time of the piece of equipment. This applies to auxiliary equipment such as compressors that have operational time checks at:

- 500 Hour PM
- 1000 Hour PM
- 2000 Hour PM

Note: All the time based PMs are operating expenditures.

For each Time Based and Operational Hour activity listed specific check sheets has been developed for each asset classification, such as mechanical, electrical, and P&C. On each check sheet, there are specific

checks and duties that have to be completed. If abnormalities, such as unexpected wear on a runner, are found, then they are reported to the Long Term Asset Planning group who assessed the condition and, if required, determine the corrective action and timing. This work may or may not require capital expenditures.

Appendix C

Overhaul Timing Background

newfoundland labrador hydro
a nalcor energy company

Major Equipment and Structural Overhauls

Major Equipment and Structural Overhauls are required on assets to ensure safe reliable operation. For Major Equipment and Structural Overhauls the timing is nominally between 6 and 25 year frequency. Some examples are:

- Generating Unit Major Overhauls, approximately every 6 years
- Generating Unit Turbine Refurbishments, approximately every 15 - 25 years
- Control Structure Major Overhauls, approximately every 10 years
- Intakes, Spillways, and Bypasses Major Overhauls, approximately every 15 years

To determine the timing and the tasks in each overhaul, information such as the following is reviewed:

1) Timing
    - Is the unit overhaul required at this time (based on equipment condition)?;
    - Is there sufficient generation is available on the electrical system to allow the outage?; and
    - Will any spilling of reservoir water occur during the time the outage is required?
2) Condition

    There are two types of assessments that LTAP use to determine the condition of an asset, Class 1 or Class 2 assessments:

    - Class 1 Assessments

      These assessments are completed using information from condition monitoring or during maintenance procedures.

    - Class 2 Assessments

      These assessments are completed using information from detailed, extensive asset inspection or testing. The information is obtained through overhauls conducted and investigations completed by people with specialized expertise. The activities required can involve advanced testing and or disassembly of equipment to perform a inspections and testing.

3) Asset Criticality

Asset management personnel have ranked hydraulic generation assets criticality. This ranking is used in determining the priority of work in a given year.

4) Frequency of Operation

An asset that is used more frequently will require more maintenance, both preventative and corrective, therefore a unit that is used more will have overhauls scheduled more frequently.

5) Safety

Projects that have safety justifications are given high priority.

6) Reliability

Overhauls can be performed earlier for the units that exhibit poor reliability.

7) Geographical Location

The maintenance center for Hydro Generation is located in Bay d'Espoir. When work is required at stations or structures outside the Bay d'Espoir area plans are developed to pool many activities together to increase efficiency.

3. Refurbish Ebbegunbaeg Control Structure

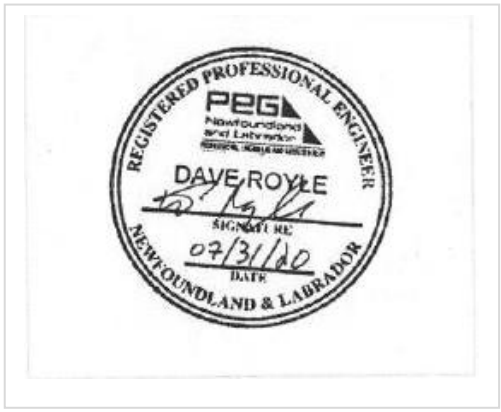

2021 Capital Budget Application

Refurbish Ebbegunbaeg Control Structure

July 2020

A report to the Board of Commissioners of Public Utilities

newfoundland labrador hydro
a nalcor energy company

Executive Summary

This project is for the refurbishment of the Ebbegunbaeg Control Structure. This control structure allows for the movement of water between the Meelpaeg Reservoir and Crooked Lake to supply the Upper Salmon and Bay d'Espoir powerhouses. It is a part of the original infrastructure of the Bay d'Espoir hydroelectric project.

Previously, a two-year project was approved in Newfoundland and Labrador Hydro's ("Hydro") 2019 Capital Budget Application ("CBA") for the refurbishment of the Ebbegunbaeg Control Structure. However, due to the then-unknown condition of the stoplog monorail hoist system and an omission in the original project scope, Hydro decided to cancel the original project and submit a new proposal for a four-year program that encompasses the complete scope of the required refurbishment in its 2021 CBA.[1]

Condition assessments performed by a consultant in 2017 and 2019 identified issues with the substructure, superstructure, and the gates on the structure. Although there were no alternatives identified for the refurbishments required for the structure, there are three alternative approaches to the refurbishment of the stoplog monorail hoist system. Hydro completed a cost-benefit analysis on the three approaches and selected the least-cost alternative which then formed part of the overall project.

To support the reliable operation of this structure, Hydro recommends the complete refurbishment of the Ebbegunbaeg Control Structure. This project is expected to take four years to complete and the estimated cost of the project is $13,619,900.

[1] Hydro advised the Board of Commissioners of Public Utilities of its decision to cancel the Ebbegunbaeg Control Structure Refurbishment project in correspondence dated April 17, 2020.

Contents

Executive Summary i
1.0 Introduction 1
2.0 Background 1
2.1 Existing System 2
2.2 Operating Experience 4
3.0 Justification 5
4.0 Analysis 6
4.1 Identification of Alternatives 6
4.2 Evaluation of Alternatives 6
4.2.1 Alternative 1: Refurbish Existing Equipment 6
4.2.2 Alternative 2: New Monorail for Stoplogs 6
4.2.3 Alternative 3: New Monorail for Stoplogs and Gates 7
4.3 Recommended Alternative 7
5.0 Project Description 8
6.0 Conclusion 9

List of Attachments

Attachment 1: Stoplog Monorail Alternatives

1.0 Introduction

This project is for the refurbishment of the Ebbegunbaeg Control Structure. A control structure allows water to flow from one side to the other through a series of gates under the structure. The Ebbegunbaeg Control Structure was constructed in 1967 and is critical to Hydro's ability to optimize water management within its system and maximize value for customers. The Ebbegunbaeg Control Structure has been identified as the next hydraulic structure to be refurbished on the Island Interconnected System. The proposed refurbishment includes components on the substructure, superstructure, and control gates.

2.0 Background

In 2018, a portion of this project was proposed in Newfoundland and Labrador Hydro's ("Hydro") 2019 Capital Budget Application ("CBA") for execution within the Hydraulic Generation Refurbishment and Modernization project.[2] However, in 2019, detailed assessments of the stoplog monorail hoist system revealed structural safety concerns that needed to be addressed. While some degree of refurbishment was expected for the hoist system, the extent of the work identified in the detailed assessment was materially higher than originally estimated.

Early in 2020, while Hydro was assessing the next steps, an omission in the original project scope was identified. The project scope did not clearly state that the two-year project, as described in the 2019 CBA, was specific to one of the three gates at the Ebbegunbaeg Control Structure, Gate 3. Therefore, it was not clear in the original application that the cost estimate reflected the refurbishment of Gate 3 only. Gates 1 and 2 were included in future years as part of the 5-year plan under the Control Structure Refurbishment projects.

Given the extent of the work required on the stoplog monorail hoist system and the clarification required on the original project scope, Hydro decided to cancel the original 2019-2020 project and to resubmit a four-year program separate from the Hydraulic Generation Refurbishment and Modernization project for the refurbishment of the Ebbegunbaeg Control Structure. Hydro communicated its decision to the Board of Commissioners of Public Utilities in correspondence dated April 17, 2020.

[2] The 2019–2020 Hydraulic Generation Refurbishment and Modernization project was approved within Board Order No. P.U. 46(2018).

2.1 Existing System

The Ebbegunbaeg Control Structure was built in 1967 as a part of the Bay d'Espoir hydroelectric project. The structure is a critical component of the Bay d'Espoir system as it controls water from the Meelpaeg Reservoir and discharges into Crooked Lake and eventually through the Upper Salmon and Bay d'Espoir powerhouses. Figure 1 provides an image of the Meelpaeg Reservoir and Crooked Lake, including the location of the Ebbegunbaeg Control Structure.

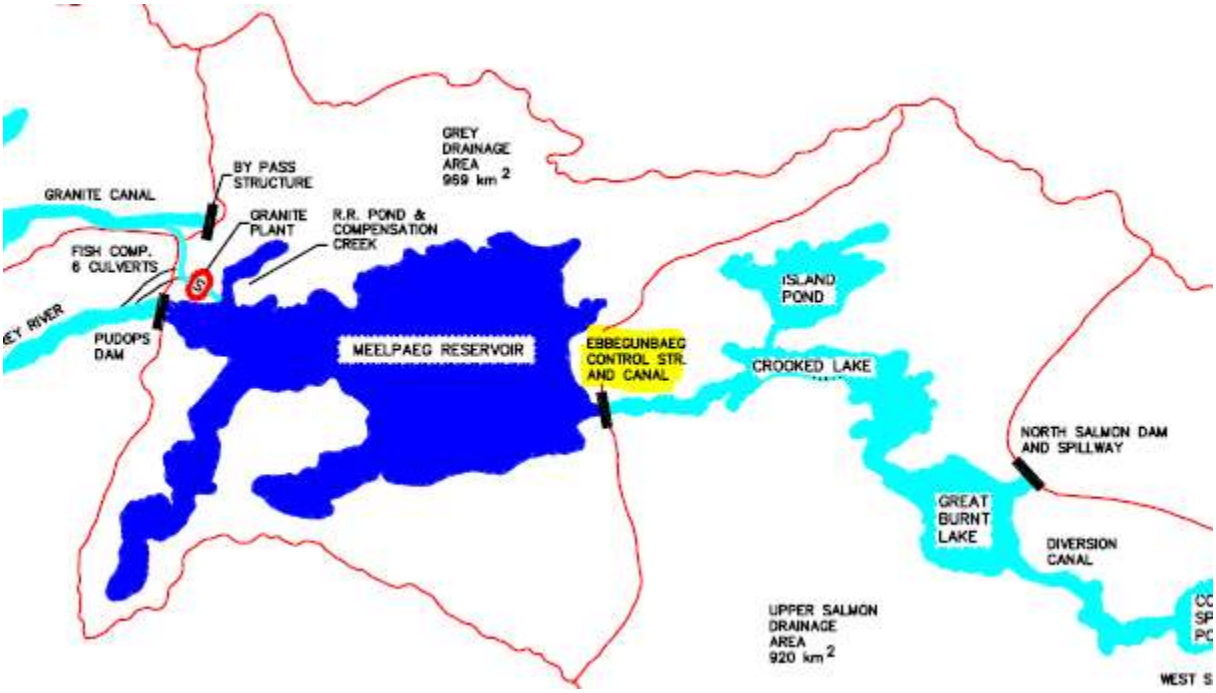

Figure 1: Map of Meelpaeg Reservoir and Crooked Lake

The Ebbegunbaeg Control Structure, as shown in Figure 2, consists of three remotely operated gates, two screw hoists, and one wire rope hoist, with a total flow discharge capacity of 338 cubic meters per second.

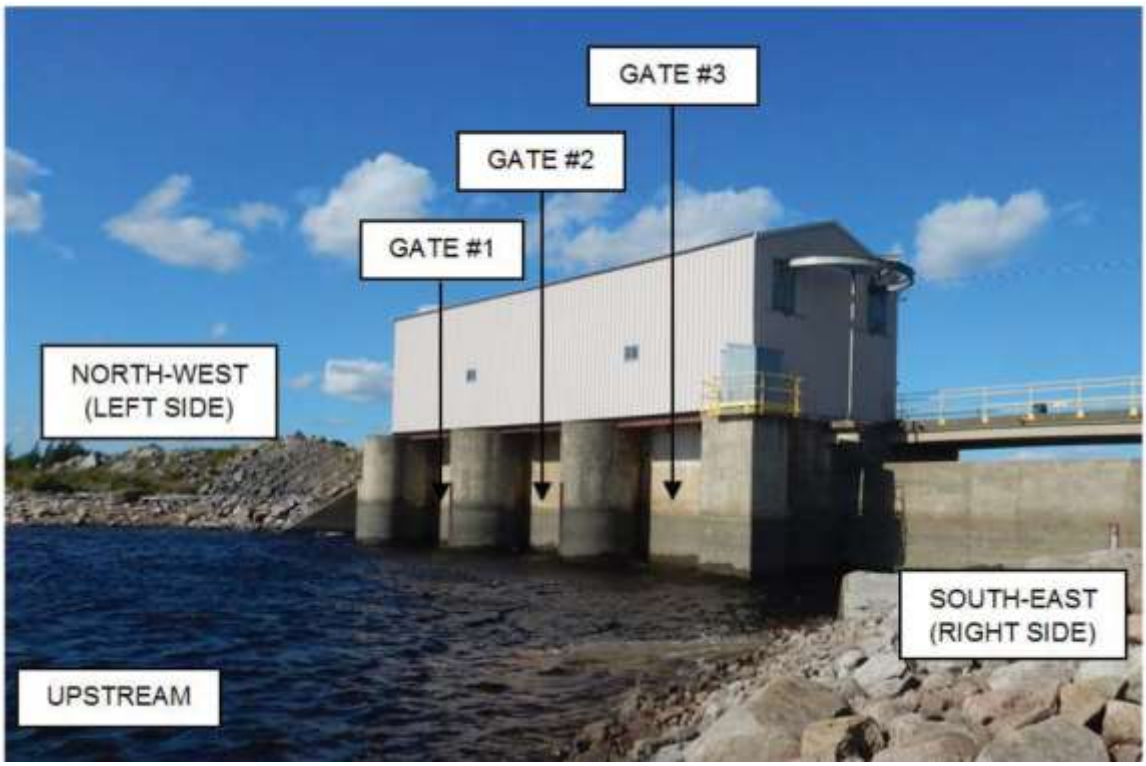

Figure 2: Ebbegunbaeg Control Structure

Major components of a control structure include:

- Substructure: the underlying or supporting structure, such as the concrete foundation;
- Superstructure: the components of a hydraulic structure that are on top of the substructure. This includes components such as the building, structural steel, hoists, and motors for the gates;
- Gates: these are designed to control the movement of water from one side of the control structure to the other. Depending on the function of the particular structure, the gates are opened to move water from one reservoir to another, or to spill water from the reservoir when the water level exceeds the maximum safe level. The gates have other components that include:
  - Stoplogs/master Logs;
  - Gate hoist;
  - Gate rollers, seals, and embedded parts;
  - Heating systems;

- Control systems; and
- De-icing systems.

2.2 Operating Experience

In 2017, Hydro engaged R'D Energie ("RDE")[3] to assess the condition of the Ebbegunbaeg Control Structure and make recommendations for refurbishment, including capital cost estimates. The assessment revealed operational issues with the gates, including damage to the main rollers, embedded parts and lifting systems. The assessment also identified concrete deterioration on the piers, decking, and around the embedded parts. Figure 3, Figure 4, and Figure 5 show some of the deteriorated conditions.



Figure 3: Roller Corrosion - Ebbegunbaeg



Figure 4: Seized Side Roller - Ebbegunbaeg

[3] RDE is a consulting firm specializing in hydraulic control structure condition assessments and preparing refurbishment plans.



Figure 5: Concrete Deterioration - Ebbegunbaeg

In 2019, RDE completed the detailed assessment of the existing monorail hoist system and while the physical condition is good, structural analysis and examination of the existing safety mechanisms caused concerns and RDE concluded that the existing system was unsafe for use.[4] The existing system is old and does not meet current safety standards. RDE completed a further study on refurbishment and replacement options for the stoplog monorail system, including revised cost estimates, early in 2020.

3.0 Justification

This project is required to maintain the reliable operation of the Ebbegunbaeg Control Structure and includes addressing existing safety limitations of the stoplog hoist system.

The deterioration of the gates, main rollers, embedded parts, and lifting systems heavily impacts the reliable operation of this structure. If left unmitigated, the deficiencies identified will continue to deteriorate and will lead to gate failures. Without properly functioning gates, it will be difficult to control the water being released from the Meelpaeg reservoir. This could lead to spilling or potential dam-related issues, such as overtopping.[5]

[4] If emergency maintenance is required that necessitates the use of the stoplog hoist prior to the upgrades being completed, Hydro will utilize a specific working procedure to mitigate any risk as much as possible.
[5] Overtopping occurs when water flows over the top of a dam. The embankment dams on either side of the Ebbegunbaeg Control Structure would be subject to erosion and potential failure should overtopping occur.

4.0 Analysis

4.1 Identification of Alternatives

There are no alternatives to the refurbishment of the Ebbegunbaeg Control Structure. This project was originally proposed in the 2019 CBA but was later cancelled after Hydro became aware of the additional work required on the stoplog monorail hoist and an omission in the scope of the original project proposal. As a result of these delays and the critical importance of this structure, Hydro does not recommend deferring this project.

However, there are three alternatives for the approach to the refurbishment of the stoplog monorail hoist system outlined below. A cost benefit analysis was completed with respect to these three alternatives:

- Alternative 1: Refurbish Existing Equipment;
- Alternative 2: New Monorail for Stoplogs; and
- Alternative 3: New Monorail for Stoplogs and Gates.

4.2 Evaluation of Alternatives

4.2.1 Alternative 1: Refurbish Existing Equipment

In this alternative, the existing monorail structure would be refurbished to safely handle upstream and downstream stoplogs. The existing monorail structure would be left in place and only modified as required to make it safe to use and compliant with applicable codes and good practice standards. Gates and other components would need to be removed from the existing building through the roof using a heavy-service crane. The estimated cost of this alternative is $1,519,500.

4.2.2 Alternative 2: New Monorail for Stoplogs

In this alternative, the existing monorail structure would be replaced with a new structure that is capable of safely handling the upstream and downstream stoplogs.

Replacement improves the quality and service life of the structure. Similar to refurbishing the existing equipment, the gates and other components would still need to be removed from the existing building through the roof using a heavy-service crane. The new structure would be designed with strategically bolted connections to ease dismantling in subsequent years to allow for removal of gates and other components. The estimated cost of this alternative is $1,507,000.

4.2.3 Alternative 3: New Monorail for Stoplogs and Gates

In this alternative, the existing monorail structure would be replaced with a new structure that is capable of safely moving the gates and other components (e.g., hoists, stoplogs) in and out of the building. The new structure would permit gate removal through the south end of the building (past Bay 3) without removing the roof and would require a lighter crane than the other alternatives. This would also improve the maintenance work space inside the building. The estimated cost of this alternative is $1,929,500.

Cost Benefit Analysis

A cost-benefit analysis was performed on all three stoplog monorail alternatives over the four-year period of this project. The results are presented in Table 1.

Table 1: Cost-Benefit Analysis Results

Alternatives	Cumulative Net Present Value to the year 2020	Cumulative Net Present Value Between Recommended Alternative and Least-Cost Alternative
3: New Monorail for Stoplogs and Gates	$1,091,260	-
2: New Monorail for Stoplogs	$1,277,377	$186,117
1: Refurbish Existing Equipment	$1,361,325	$270,064

4.3 Recommended Alternative

Hydro recommends Alternative 3, replacing the existing monorail structure with a new structure that is capable of safely moving the gates and other components (e.g., hoists, stoplogs) in and out of the building to correct the stoplog monorail deficiencies at the Ebbegunbaeg Control Structure. This alternative is the least-cost option. Although this alternative has the highest up-front cost in the first year of this project, the savings expected to be achieved on the overall project over the remaining three years, as a result of not having to remove the roof multiple times, makes this the recommended option.

This alternative also provides future savings which are not reflected in the cost-benefit analysis. The new design will make future corrective and preventive maintenance more efficient and cost-effective to execute. Attachment 1 provides further details on each of the three alternatives.

5.0 Project Description

This project is for the refurbishment of the Ebbegunbaeg Control Structure, including the work related to the stoplog monorail hoist system, as described below.

- Year 1:
  - Replacement of the stop log monorail hoist system;
  - Completion of a constructability analysis to determine the optimal approach to take for the required refurbishment; and
  - Minor building improvements to facilitate project execution (e.g. lighting and communications).
- Years 2–4:
  - Gate refurbishments, including:
    - Refurbishment of major embedded parts;
    - Replacement of main rollers/side rollers/springs;
    - Replacement of seals; and
    - Refurbishment of screw hoist;
  - Refurbishment of second stage concrete; and
  - Replacement of wire rope.

The work is proposed to take place over four years (2021–2024) for an estimated cost of $13,619,900. Table 2 provides the project estimate.

Table 2: Project Estimate ($000)

Project Cost	2021	2022	2023	2024	Total
Material Supply	1,107.0	81.7	81.7	81.6	**1,352.0**
Labour	283.9	530.6	533.1	533.5	**1,881.1**
Consultant	120.0	90.0	90.0	90.0	**390.0**
Contract Work	1,238.0	1,829.0	1,825.5	1,825.5	**6,718.0**
Other Direct Costs	29.8	46.9	42.1	42.1	**160.9**
Interest and Escalation	180.2	402.3	640.5	844.7	**2,067.7**
Contingency	277.9	257.8	257.2	257.3	**1,050.2**
Total	**3,236.8**	**3,238.3**	**3,470.1**	**3,674.7**	**13,619.9**

The anticipated project schedule is shown in Table 3.

Table 3: Project Schedule

Activity	Start Date	End Date
Planning:		
Detail plan for the refurbishment and stoplog monorail hoist and structure including consultant.	February 2021	March 2021
Design:		
Consultant to perform constructability analysis and design for stoplog monorail hoist.	March 2021	May 2021
Procurement:		
Special material requirements, structural steel and new stoplog monorail hoist.	April 2021	May 2021
Construction:		
FEED and stoplog monorail refurb -2021	June 2021	October 2021
Gate refurbishment - 2022	June 2022	October 2022
Gate refurbishment - 2023	June 2023	October 2023
Gate refurbishment - 2024	June 2024	October 2024
Commissioning:		
Commission 2021	September 2021	November 2021
Commission 2022	September 2022	November 2022
Commission 2023	September 2023	November 2023
Commission 2024	September 2024	November 2024
Closeout:		
Project closeout	November 2024	December 2024

6.0 Conclusion

The Ebbegunbaeg Control Structure was constructed during the original development of the Bay d'Espoir hydroelectric project and was commissioned in 1967. The structure requires refurbishment to support its future reliability.

Attachment 1

Stoplog Monorail Alternatives

newfoundland labrador hydro
a nalcor energy company

RDE Ref.: 190425-NLH

Monorail Structure Refurbishment

Ebbegunbaeg Control Structure

Alternatives Review Memorandum

Written by :

Michael Beaudoin, P. Eng Date

Verified by :

Olivier Longpré, P. Eng Date

Rev.	Date	Description
0	2019-11-19	For Comments, 80%
1	2019-11-22	For Approval

DISCLAIMER

This Report was prepared solely for internal purposes. All parties other than NL Hydro are third parties. RD Énergie does not represent, guarantee or warrant to any third party, either expressly or by implication:

(a) The accuracy, completeness or usefulness of,

(b) The intellectual or other property rights of any person or party in, or

(c) The merchantability, safety or fitness for purpose of, any information, product or process disclosed, described or recommended in this Report.

RD Énergie does not accept any liability of any kind arising in any way out of the use by a third party of any information, product or process disclosed, described or recommended in this Report, nor does NL Hydro accept any liability arising out of reliance by a third party upon any information, statements or recommendations contained in this Report. Should third parties use or rely on any information, product or process disclosed, described or recommended in this Report, they do so entirely at their own risk.

Table of Contents

Executive Summary 1
1. Alternative #1: Existing Monorail Refurbishment 4
1.1 Description 4
1.2 Impacts on overall Ebbegunbaeg Control Structure refurbishment program 6
1.3 Pros/Cons 7
1.4 Risks 7
1.5 Opportunities 8
1.6 Estimate 8
2. Alternative #2: New Monorail for Stoplogs 9
2.1 Description 9
2.2 Impacts on overall Ebbegunbaeg Control Structure refurbishment program 10
2.3 Pros/Cons 13
2.4 Risks 13
2.5 Opportunities 14
2.6 Estimate 14
3. Alternative #3: New Monorail for Gates and Stoplogs 15
3.1 Description 15
3.2 Impacts on overall Ebbegunbaeg Control Structure refurbishment program 16
3.3 Pros/Cons 18
3.4 Risks 18
3.5 Opportunities 19
3.6 Estimate 20

List of Figures

Figure 1: Overloaded existing monorail (Extracted from «Structural Evaluation of the Monorail Superstructure of the Ebbegunbaeg Control Structure» (2019, RD Énergie)) 4
Figure 2: Electrical equipment mounted on the south wall upstream door 5
Figure 3: Alternative #1 inside existing building 6
Figure 4: Alternative #2 inside existing building 10
Figure 5: Gate lifting through building roof 11
Figure 6: Alternative #3 inside existing building 16
Figure 7: Gate lifing at Bay #4 17

List of Tables

Table 1: Assessment of each Alternative for the Overall Project 2
Table 2: Monorail Rehabilitation Cost Estimate / Future savings 2
Table 3: Risk Assessment for the Overall Project 3
Table 4: Opportunity/Benefits Assessment for the Overall Project 3
Table 5: Alternative #1 Pros/Cons 7
Table 6: Alternative #2 Pros/Cons 13
Table 7: Alternative #3 Pros/Cons 18

Appendices

Appendix A: Detailed costs and savings estimate
Appendix B: Monorail alternatives #1, #2 and #3 drawings

Executive Summary

RD Énergie completed a detailed assessment of the Ebbegunbaeg Control Structure (Ebbe) in 2017. As a result, a multi-year rehabilitation program of all three of the Ebbe control gates and associated equipment was developed to restore reliable operation of this facility built in 1967.

NL Hydro retained RD Énergie in 2019 to prepare tender documents for the first phase of rehabilitation which will include the refurbishment of #3 gate, hoist and embedded parts, and #2 embedded parts. All equipment is housed in a building with limited work space. A bridge crosses the dam, immediately downstream of the building.

The building would require major dismantling and heavy crane equipment on the bridge deck to handle old and new equipment, in and out of the building. The monorail structure would also require dismantling to leave room for gate liftings through the roof.

In addition, deficiencies on the monorail structure were identified in 2017. Part of the current mandate included a theoretical assessment of the monorail structure load capacity. RD Énergie determined that the existing structure does not meet current norms for its basic purpose of stoplog handling upstream and downstream of the control gates[1].

Therefore, this report summarizes refurbishment options of the monorail structure from the perspective of optimizing construction costs for the duration of the entire rehabilitation program and improving maintenance.

The three alternatives considered are:

> **Alternative #1:** Refurbish the Existing Monorail Structure to safely handle upstream and downstream stoplogs.
>
> The existing monorail structure is left in place and only modified as required to make its use safe and suitable to applicable codes and good practice standards. Gates and other components must be removed from existing building through the roof with heavy-service crane.
>
> **Alternative #2:** Replace the Existing Monorail Structure with a new structure capable of safely handle upstream and downstream stoplogs.
>
> Replacement improves quality and service life of the structure. However, like Alternative #1, gates and other components must be removed from the existing building through the roof with a heavy-service crane. The new structure would be

[1] RD Énergie report 190425-NLH-SSTR-EVAL-R3. October 10, 2019. Structural Evaluation of the Monorail Superstructure of Ebbegunbaeg Control Structure.

designed with strategical bolted connections to ease dismantling in subsequent years to allow removal of gates and other components.

Alternative #3: Replace the Existing Monorail Structure with a new structure capable of safely moving the gates and other components (hoists, stoplogs) in and out of the building.

The new structure permits gate removal through the south end of the building (past Bay 3) without removing the roof, using a lighter crane and improves maintenance work space inside the building.

As result, Alternative #3 presents the best option for the overall Control Structure Refurbishment project (Table 1). The term 'best' in the following tables means the lowest cost, best risk mitigation, or best functionality/quality or cost savings opportunity.

Table 1: Assessment of each Alternative for the Overall Project

Criteria	Alternative #1	Alternative #2	Alternative #3
Monorail Rehabilitation Cost	Best	Better	Worst
Overall Project Cost	Better	Worst	Best
Durability (Service Life)	Worst	Best	Best
Risks	Worst	Better	Best
Opportunities	Worst	Better	Best

The monorail rehabilitation work is assumed to be completed in Year 1 and the subsequent refurbishment work of gates, hoists and embedded parts will be conducted during years 2 to 4.

Table 2 shows that while Alternative #3 is the most expensive alternative for year 1, associated savings in years 2 to 4 make this alternative the most cost effective. Savings from avoiding building and monorail dismantling in year 2, 3 and 4, are detailed in Appendix A.

Table 2: Monorail Rehabilitation Cost Estimate / Future savings

Description	Alternative #1	Alternative #2	Alternative #3
Direct construction and fabrication costs	569 500 $	612 000 $	827 750 $
Contingency 50%	284 750 $	306 000 $	413 875 $
Total (Year 1)	854 250 $	918 000 $	1 241 625 $
Estimated savings in Years 2 to 4 (With 50% contingency)	0 $	50 497 $	534 805 $
Net Monorail Rehab. Cost after Year 2 to 4 savings	854 250 $	867 503 $	706 820 $

In addition, Table 3 and Table 4 present potential risks and opportunities associated to the four year project. These risks and opportunities could have a financial impact but were not quantified or considered in Table 2 because they required detailed analysis which is out of scope for this mandate.

In Table 3, each risk was evaluated and compared between alternatives and rated "Best to Worst". The term 'best' in the table means least chance of occurring or the lowest extra cost.

Table 4 presents a list of potential opportunities to save money or to improve maintenance operations.

Table 3: Risk Assessment for the Overall Project			
Criteria	**Alternative #1**	**Alternative #2**	**Alternative #3**
Crane Mobilization/Demobilisation issues	Worst	Worst	Best
Crane Availability	Worst	Worst	Best
Control Structure Bridge Reinforcement	Worst	Worst	Best
Roads and Dikes Reinforcement	Worst	Worst	Best
Potential Building Damage	Worst	Worst	Best
Asbestos Control (if present in building insulation)	Worst	Worst	Best
South end building wall structure Reinforcement	Worst	Worst	Best
Lead Paint Control (probably present)	Worst	Better	Better

Table 4: Opportunity/Benefits Assessment for the Overall Project			
Opportunity	**Alternative #1**	**Alternative #2**	**Alternative #3**
Eliminate need for heavier cranes (45 or 90 ton) and associated road, dike and bridge reinforcements.	No	No	Yes
Easier gate maintenance inside the building	No	No	Yes

1. Alternative #1: Existing Monorail Refurbishment

1.1 Description

Alternative #1 consists of keeping the refurbishing the monorail structure to correct all safety issues for its original purpose of handling upstream and downstream stoplogs. This alternative is presented on drawing "190425-MONOALT1-D001" in Appendix B.

Based on «Structural Evaluation of the Monorail Superstructure of the Ebbegunbaeg Control Structure» (2019, RD Énergie), many different structural members and connections require reinforcement. Figure 1, extracted from Appendix 3 of the "Structural Evaluation" shows overloaded members.

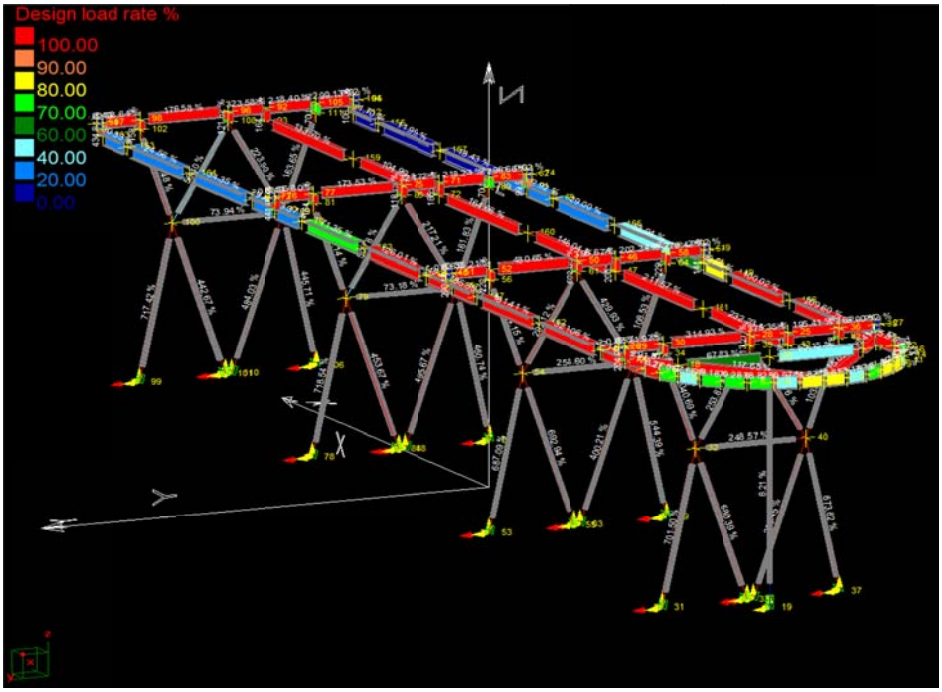

Figure 1: Overloaded existing monorail (Extracted from «Structural Evaluation of the Monorail Superstructure of the Ebbegunbaeg Control Structure» (2019, RD Énergie))

To fix the structural issues:

- New posts would be added downstream and upstream the existing towers. Those posts would support the tower top beams to reduce compression loads transmitted to towers. New posts would be anchored with new base plates added beside the existing tower anchors and bolted to the top beam.
- New structural channels would be welded above the existing tower top beams. Those channels would help to reduce bending stress of the top beam.
- New structural channels would be welded above the existing monorail beams. Those channels would help to reduce bending stress of the rails.

- New bracing would be added to the structure to improve lateral stability.
- All existing monorail connections (spliced, welded or bolted), existing base plates and anchors must be inspected and analysed in detail and modified as required.

Another major issue found with the monorail structure is the impossibility for the Masterlog to be transferred between upstream and downstream. Due to the lack of information about "U" outside loop, it was impossible to verify the capacity of the loop.

In addition, electrical equipment mounted on the south wall upstream door restricts opening of the door (Figure 3).



Figure 2: Electrical equipment mounted on the south wall upstream door

To solve this issue, the «U» outside loop would be completely removed and replace by an inside rail at bay #2. This rail would be used to transfer the Masterlog, with a new chain hoist and a central lifting point, between upstream and downstream. The central lifting point would allow the Masterlog to rotate to accommodate both upstream and downstream stop logs.

The Figure 3 illustrates the Alternative #1 potential result.

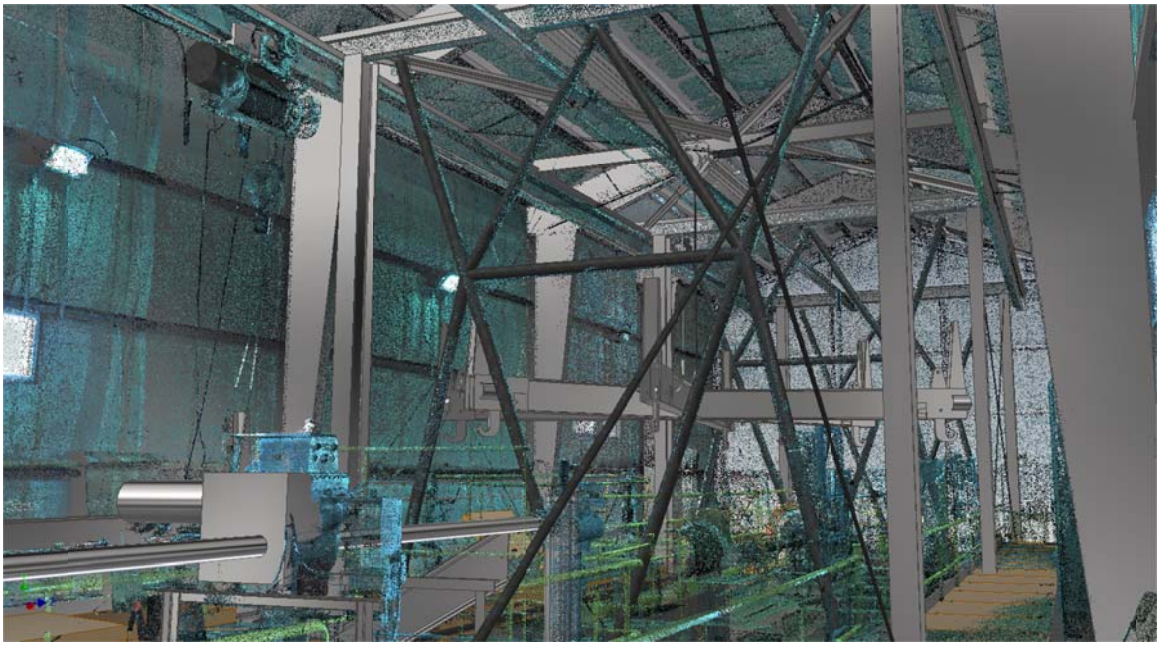

Figure 3: Alternative #1 inside existing building

1.2 Impacts on overall Ebbegunbaeg Control Structure refurbishment program

With Alternative #1, gates and other components must be removed from the building through the roof using a crane. The same issue applies to Alternative #2. See Section 2.2 for details regarding removing a gate through the building roof.

1.3 Pros/Cons

Table 5: Alternative #1 Pros/Cons	
Pros	Cons
	New structural monorail elements will be welded on site. On site welding is more expensive, required more management and results in lower quality.
	New structural monorail elements will be painted on site. On site painting is more expensive, required more management, required more safety and environmental considerations and results in lower quality. Surface preparation will also be done on site.
	A detailed inspection during on site work will be required to inspect each bolt, weld, anchor, etc. Expected, but also unexpected, part replacements and repairs will be required.
	The existing swing stage rail will need to be moved above the new Masterlog rotating rail to let room for Masterlog hoist movement.
	New structural components (posts and bracing) will significantly reduce walking areas and complicate the handling of downstream stoplog gain covers.

1.4 Risks

With Alternative #1, all new components must be installed around or beside the existing monorail structure. This means there is a risk of interference with existing elements present inside the building. With a new structure, this risk is nearly absent due to the fact that new members would take the place of the older structural elements and remain inside the overall dimensions of the existing structure.

To now, potential interference has already been detected. New downstream bracings may interfere with downstream stoplog covers and downstream cable trays running left/right. New downstream posts may interfere with the downstream stoplog covers over the pillars, may interfere with compressor pipes and may interfere with new stoplog hoists.

Existing monorail structure painting is also a risk in this project. Since there is on site welding and surfaces preparation with existing unknown paint, special cares and precautions could be required to prevent safety or environmental hazards (lead paint).

Other major risks associated to Alternative #1 are related to the gates removal by the roof. Since this removal steps are identical to Alternative #2, see Section 2.4 for complete list of risks also involved in Alternative #1.

1.5 Opportunities

- Manufacturing a second Masterlog would eliminate the rotating Masterlog rail requirement. Without this rail, the modification of the swingstage rail would not be required anymore. However, the new Masterlog will need to be stored somewhere, potentially inside the last available downstream stoplog gain.
- An opportunity concerning the building replacement is possible with alternative #1 and #2; see Section 0 for more details.

1.6 Estimate

See Appendix A for a detailed cost estimate per alternative.

2. Alternative #2: New Monorail for Stoplogs

2.1 Description

Alternative #2 consists of replacing the existing monorail structure to safely handle stoplogs upstream and downstream (original purpose). This alternative is presented on drawing "190425-MONOALT2-D001" in Appendix B.

By removing the existing monorail structure, all issues discussed in Section 1 would be solved at same time. The replacement structure would be designed to suite applicable codes and good practice standards for stoplog operations (considering lateral loads).

The existing pillar centered tower would be replaced by a more common structural frame, braced in upstream/downstream direction. The vertical main beam webs (strong axis) would be in left/right direction and would be anchored to pillar with moment-stiff bases, centered on old tower bases. With those moment-stiff bases, left/right bracing between pillars would not be required, eliminating the risk of interference with existing components as stoplog covers. In addition, a horizontal bracing between top beams at Bay #2 would be present in addition to stoplog upstream and downstream monorails.

Like alternative #1, the existing outside "U" loop would be removed and replaced by a rail at bay #2 to transfer and rotate the Masterlog, using a new central chain hoist. Since the swing stage is still required with alternative #2, its new rail would be directly installed above the new tower top beams and above the Masterlog rotating rail, leaving enough room for Masterlog hoist movements.

The Figure 4 shows the Alternative #2 potential result inside the existing building.

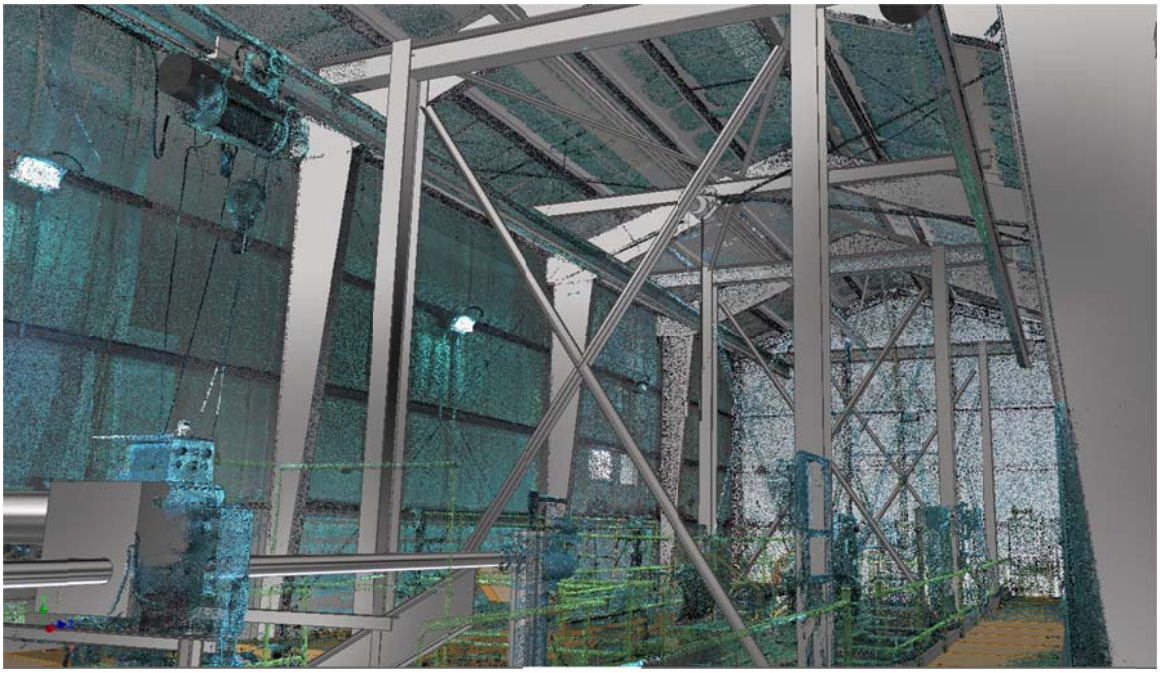

Figure 4: Alternative #2 inside existing building

2.2 Impacts on overall Ebbegunbaeg Control Structure refurbishment program

Like Alternative #1, the major impact of Alternative #2 on the overall project is many components to be refurbished in shop must be removed from the building through the roof. Since the monorail structure cannot move heavier equipment than a stop log, it cannot be used to bring heavy equipment to south wall doors. Therefore, for a proper evaluation and comparison of monorail alternatives, costs and associated risks for lifting operations must be considered, particularly because the Ebbegunbaeg Control Structure refurbishment program will require monorail structure sections and building roof dismantling in all three bays.

Since the gates are the most complex items to lift, required modifications and implications are described below to illustrate the challenges.

Considering the gates weight, the required lifting radius and the available space on the bridge for crane outriggers, a preliminary analysis determined than at least a 90 ton mobile crane would be required (see Figure 5 for a visual approximation). This means the existing bridge sections would require inspections, analysis and reinforcement. Currently available information states the bridge was originally design for “Dead weight of the bridge plus live load of a 25 ton mobile crane carrying a 12.5 ton gate” (dwg. F-122-C-27), which is significantly insufficient. The most probable reason between the original crane requirement and today’s crane requirement is the building itself. Since it overlaps onto the bridge, the building reduces available space for crane outriggers and also

significantly increases the lifting height. For original gate installations, it seems that the building was not there, facilitating a lot the gate lifting and installation.

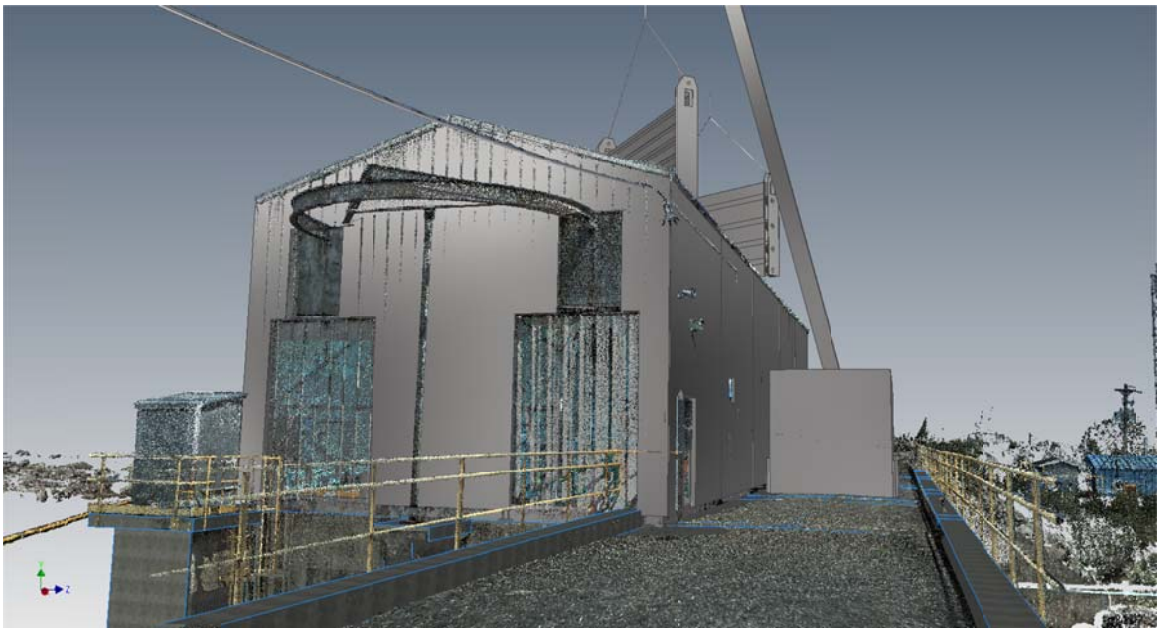

Figure 5: Gate lifting through building roof

Thus, due to existing main roof beam positions, gates cannot be removed "in line" with their embedded parts. The gates must be rotated to be lifted between the building main roof beams using a new custom spreader beam to avoid interference with riggings. Both upstream and downstream sides of the roof will have to be removed to permit such gate rotations. Swing stage rail sections, Masterlog rotation rail and downstream monorail sections will have to be removed. In addition, hoists and hoists bases must be removed to allow gate exits from their embedded parts. Since hoists and hoist bases have their own refurbishment program, a good planning is required to synchronize both projects.

In other words, removing the three gates through the roof involves:

Year #1, "Gate #3 refurbishment"

- 90 ton crane mobilisation
- Both sides of roof dismantling
- Monorail elements dismantling
- Hoists and hoist base #3 removal
- Gate #3 removal
- Temporary sheltering
- 90 ton crane demobilisation
- Components refurbishment
- Second 90 ton crane mobilisation
- Gate #3 and other refurbished component installations

- Roof reinstallation
- 90tons crane demobilisation

Year #2, "Gate #2 refurbishment"

- 90tons crane mobilisation
- Both sides of roof dismantling
- Monorail elements dismantling
- Hoists and hoist base #2 removal
- Gate #2 removal
- Temporary sheltering
- 90 ton crane demobilisation
- Components refurbishment
- Second 90tons crane mobilisation
- Gate #3 and other refurbished component installations
- Roof reinstallation
- 90 ton crane demobilisation

Year #3, "Gate #1 refurbishment"

- 90 ton crane mobilisation
- Both sides of roof dismantling
- Monorail elements dismantling
- Hoists and hoist base #1 removal
- Gate #1 removal
- Temporary sheltering
- 90 ton crane demobilisation
- Components refurbishment
- Second 90 ton crane mobilisation
- Gate #3 and other refurbished component installations
- Roof reinstallation
- 90 ton crane demobilisation

2.3 Pros/Cons

Table 6: Alternative #2 Pros/Cons	
Pros	Cons
No on site welding will be required. Bolted connections will be design to ease field installation.	
All new monorail structure will be hot dip galvanised before installation. (No onsite painting)	
All connection designs and bolts will be new, eliminating on site surprise.	
New structural tower design will facilitate walking upstream/downstream between hoists.	

2.4 Risks

Risks associated with Alternative #2 are mostly related to components removal through the roof with a crane (those risks are also associated to Alternative #1).

As a major risk, the 90ton crane availability for multiple operations at Ebbegunbaeg can easily add delays and extra cost to the project. The road to Ebbegunbaeg and the available space on dam bridges can require unusual type or size of crane.

The road to Ebbegunbaeg itself can be a risk of extra costs. By using heavy cranes, road bridges and dikes structural capacities will have to be analysed to ensure they are safe for crane displacements. Repairs or reinforcements could be required.

The north and south wall structural capacity of the building could require extra reinforcements. The both upstream and downstream roof side removals could affect the wall integrity. Analysis would be required prior to roof removal.

Other costs could be added to the project relative to the roof composition and manipulations. The roof isolation could contain asbestos and require special handling procedures. Damages could also occur to roof itself and to inside building components with wrong manipulations as roof sections dropping.

2.5 Opportunities

- Manufacturing a second Masterlog would eliminate the rotating Masterlog rail requirement. However, the new Masterlog will need to be stored somewhere, potentially inside the last available downstream stoplog gains.
- Another opportunity that could be considered would be to remove the existing building and to replace it by a new one designed to facilitate gates and other components removal. This opportunity could be considered due to the fact that about 70-80% of the roof would be removed and reinstalled with Alternative #2 (and alternative #1). This is not studied or estimates in this report.

2.6 Estimate

See Appendix A for a detailed cost estimate per alternative.

3. Alternative #3: New Monorail for Gates and Stoplogs

3.1 Description

Alternative #3 consists of replacing the existing monorail structure with a new structure capable of safely handle and bring gates (and other components as stoplogs) outside the building at Bay #4, ready for shipment. This alternative is presented on drawing "190425-MONOALT3-D001" in Appendix B.

Like Alternative #2, the replacement structure would be designed to suite applicable codes and good practice standards for stoplog operations (considering lateral loads), but also for gate manipulations.

The preliminary design of Alternative #3 structure is similar to the Alternative #2 structure. With different beam section dimensions, the towers, the bracings and the moment-stiff structural post bases are using the same principles. The main differences are:

- Two transfer beams per bays would be added over the upstream and downstream monorail, in upstream/downstream direction. These transfer beams allow transferring components, including gates, between upstream and downstream monorail.
- The downstream monorail would extend to Bay #4 through south wall downstream existing door to allow gates and other components removal.
- There are two horizontal bracings over the two new towers each side of Bay #2 instead of one centered with Bay #2.
- There is no swing stage beam anymore since the transfer beams could be used to hook the swing stage.

As Alternative #1 and #2, the Masterlog transfer and rotation would use a central chain hoist and rail centered with Bay #2.

The Figure 6 shows the Alternative #3 potential result inside the existing building.



Figure 6: Alternative #3 inside existing building

3.2 Impacts on overall Ebbegunbaeg Control Structure refurbishment program

The greatest benefit of Alternative #3 is that the gate would be removed by the existing south wall door instead of the roof. Precise manipulations would still be required but the roof and the monorail structure wouldn't be removed or dismantled.

The gates and other components would be picked by two low-head chain hoists installed on transfer beams and transferred to two other low head chain hoists installed to downstream monorail. Next, components could be transferred outside of building and grabbed by a crane. Available space between downstream monorail extension and the bridge required the gate to be lifted up from the upstream side of the rail. To execute this lift, the required crane is preliminary estimated to be a compact mobile 45 ton crane, which is smaller than the crane used in Alternative #2 and #1 for gate removal through roof. See Figure 7 for a visual approximation of the gate lifting. Existing bridge sections would still require inspections, analysis and reinforcement. It is important to note that all three gate lifts for this alternative would be on bridge section number #4 only.

Current available information states the bridge was originally design for "Dead weight of the bridge plus live load of a 25ton mobile crane carrying a 12.5ton gate" (dwg. F-122-C-27).

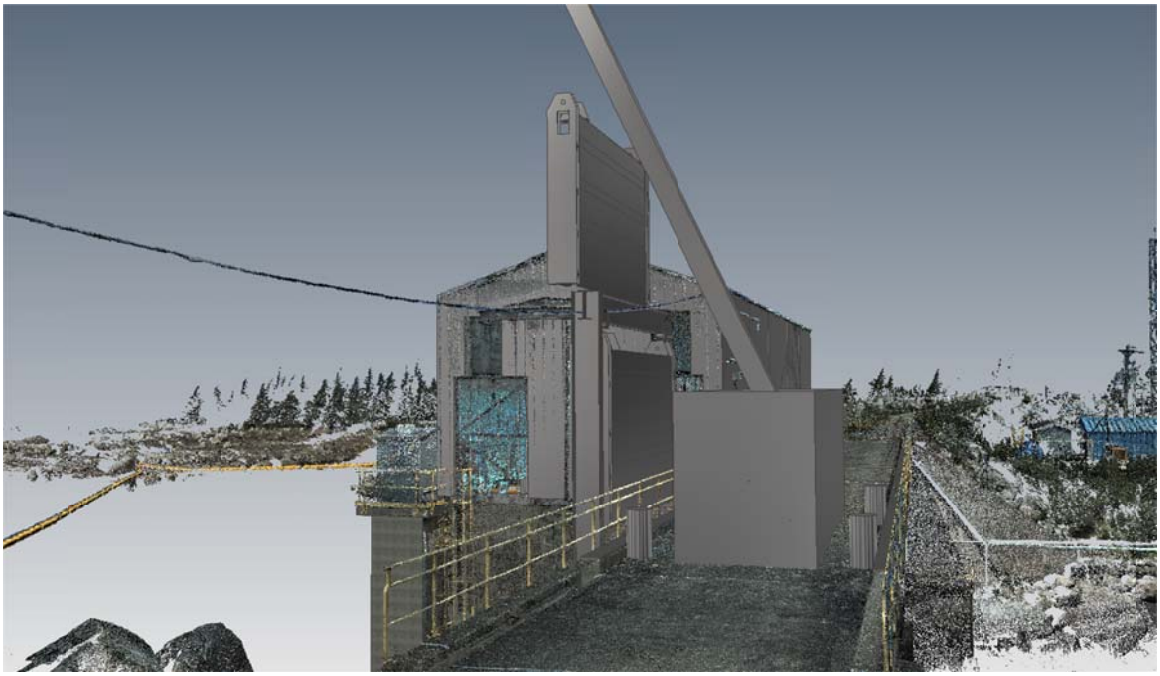

Figure 7: Gate lifing at Bay #4

Note that hoists and hoists bases must be removed to allow gate exits from their embedded parts and transfers to downstream monorail. Since hoists and hoist bases have their own refurbishment program, a good planning is required to synchronize both projects.

Also note that for gate #1 removal, the stoplog hoist sharing the rail with low head gate hoist will be in the way. Dismantling of one or the other hoist and/or temporary gate storing on transfer beams at Bay #2 for switching will be required.

As other impact on overall project is that new transfer beams could be used to carry/lower tools and stuff inside the building and inside the embedded parts to sill facilitating many work steps.

3.3 Pros/Cons

Table 7: Alternative #3 Pros/Cons	
Pros	Cons
No on site welding will be required. Bolted connections will be design to ease field installation.	
All new monorail structure will be hot dip galvanised before installation.	
All connection designs and bolts will be new, eliminating on site connection inspections.	
New structural tower design will facilitate walking upstream/downstream between hoists.	
Since the roof is not dismantled, all work occurring inside the building would be protected from weather.	

3.4 Risks

Even if the 45ton crane is smaller than the 90ton crane required Alternative #2 and #1, there is still a significant risk concerning crane availability for multiple operations at Ebbegunbaeg. Delays and extra costs could result from crane mobilisation problems. In addition, the road to Ebbegunbaeg and available space on dam bridges can require unusual specific crane type or even a bigger one.

Road to Ebbegunbaeg itself can be a risk of extra costs. By using important cranes, road bridges and dikes structural capacities will have to be analysed to ensure they are safe for crane displacements. Repairs or reinforcements could be required.

With gates and others components manipulations at Bay #4, there is a risk of interference with the existing power line connected to the building. This line would need to be secured or moved prior work. For Alternative #1 and #2, work discussed in this report only concerned components passing through building roof, however there is a good chance that south wall door would need to be used for other required tasks on overall Ebbegunbaeg project. Power lines would probably need to be secured or moved with all monorail alternatives.

3.5 Opportunities

- Transfer beams could be used as gate dogging system at any gate elevations. The existing lever dogging system, embedded in gains, requiring refurbishment would be dismantled and not replaced. In addition, existing chain hoists rolling under the main hoist base would not be required anymore since the low head hoist on transfer beams would be able to transfer the gate between current maintenance position and "extracting position". This opportunity only requires that the main hoist shaft not be in line with the lifting screws or in line with the gate "gravity/lifting plan".
- The transfer beams could be used to raise gates above building floor, to perform short term periodic maintenance. However, current hoist motors #1 and #3 prevent gate from being raised above the floor from the "extraction position". This problem could be solved with a new main hoist design having the motor in another position (vertical or going downstream). Hoist #2 design already seems to be suitable for gate lifting into its "new maintenance position".
- With both previous opportunities applied and a hoist design capable of raising gates to just below its hoist base without removable "extension" (as a cable hoist could easily do), connection between transfer beams hoist hooks and gate lifting points could be done directly from the hoist base floor. This manipulation would eliminate the swing stage requirement. Gate would be lifted directly from the sill to the hoist base in one movement. Then, gate would be hooked with transfer beams hoists by an operator standing on the hoist base and transferred to the "extraction position". Finally, gate would be raise above the building floor for maintenance. All steps without using the swingstage. However, it is important to note that with a hoist design having long enough rigid lifting elements (screws) to raise the gate in one movement, there is a risk of interference between the existing building main roof beams at Bay #2. Existing building main roof beam and existing gate lifting points are currently aligned.
- By providing four more low head chain hoists, all six transfer beams would be equipped with their own hoist, eliminating the requirement of displacing hoists from one bay to the other to execute maintenance or removal operations on a different gate.
- A small deviation of the downstream monorail extension to upstream could allow gates to be picked from the downstream side of the monorail beam extension. This manipulation would significantly reduce the gate lifting elevation and could simultaneously reduce required crane size. This could potentially eliminate dam bridges and dikes reinforcement.
- With a "new bridge transfer beam" installed above the Bay #4 bridge and the previous opportunity applied, gates could be directly be unloaded on a flatbed without using a crane. This bridge transfer beam would seat on the downstream monorail extension and on a post installed on the downstream side of the bridge.

- Manufacturing a second Masterlog would eliminate the rotating Masterlog rail requirement. However, the new Masterlog will need to be stored somewhere, potentially inside the last available downstream stoplog gains.

3.6 Estimate

See Appendix A for a detailed cost estimate per alternative.

Appendix A

1 *Detailed costs and savings estimate*

Estimated costs and savings

	Alternative #1	Alternative #2	Alternative #3
Year 1 - Monorail work and preparation for next years			
Engineering			
Technical specification and drawings	50 000 $	50 000 $	50 000 $
Fabrication			
Steel supply for structure	32 500 $	50 000 $	100 000 $
Machining	32 500 $	32 500 $	65 000 $
Welding	0 $	32 500 $	48 750 $
Field work			
Mobilisation / Démobilisation	96 000 $	96 000 $	96 000 $
Heavy equipment mobilisation/Demobilisation (25ton Crane, skytrack,etc.)	20 000 $	20 000 $	20 000 $
Shipping	6 500 $	10 000 $	20 000 $
Old structure removal	0 $	115 500 $	115 500 $
Old structure detailled inspection	16 500 $	0 $	0 $
Cables trays, logs covers, compressors pipes modification	11 000 $	0 $	0 $
Installation at bay #4 (Scaffolding, etc.)	0 $	0 $	38 500 $
Installation Bay#1 to #3 (Scaffolding, etc.)	115 500 $	115 500 $	154 000 $
Field welding/inspection	33 000 $	0 $	0 $
Field surface preparation / coating removal	33 000 $	0 $	0 $
Field painting	33 000 $	0 $	0 $
New monorail hoist (2x)	50 000 $	50 000 $	50 000 $
New masterlog rotation hoist	10 000 $	10 000 $	10 000 $
New 10TM low head hoist	0 $	0 $	40 000 $
Field preparation for futur work			
Gate spreader beam manufacturing	10 000 $	10 000 $	0 $
Bridge capacities analysis	20 000 $	20 000 $	20 000 $
Subtotal	569 500 $	612 000 $	827 750 $
Contingency 50%	284 750 $	306 000 $	413 875 $
Year 1 - Estimated cost	854 250 $	918 000 $	1 241 625 $

Year 2 - Bay #3 Refurbishment			
Gate referbishment			
Roof building opening	0 $	0 $	16 500 $
Hoist and hoist base dismantling	0 $	0 $	0 $
Monorail sections dismantling for gate lifting	0 $	5 500 $	11 000 $
Crane mobilisation/demob (45/90 tons)	0 $	0 $	15 000 $
Hoist removal	0 $	0 $	1 500 $
Gate removal	0 $	0 $	1 500 $
Temporary shelter over roof	0 $	0 $	5 000 $
Gate shipping/modification	0 $	0 $	0 $
Crane mobilisation/demob (45/90 tons)	0 $	0 $	15 000 $
Gate entry	0 $	0 $	1 500 $
Roof building closing	0 $	0 $	38 500 $
Monorail sections re-installation	0 $	5 500 $	11 000 $
Year 2 - Estimated saving	0 $	11 000 $	116 500 $

Year 3 - Estimated saving	0 $	11 220 $	118 830 $
Year 4 - Estimated saving	0 $	11 444 $	121 207 $

Subtotal	0 $	33 664 $	356 537 $
Contingency 50%	0 $	16 832 $	178 268 $
Estimated saving of 3 last years	0 $	50 497 $	534 805 $

Year 1 - Net cost after year 2 to 4 savings	854 250 $	867 503 $	706 820 $

Appendix B

Monorail alternatives #1, #2 and #3 drawings

PRELIMINARY DOCUMENT

THIS DOCUMENT SHALL NOT BE USED FOR CONSTRUCTION, FABRICATION OR INSTALLATION.

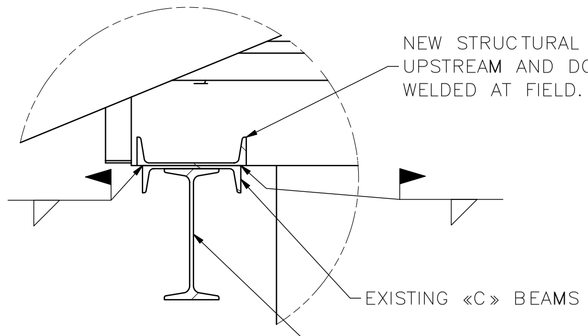

DETAIL C
SCALE: 1:10

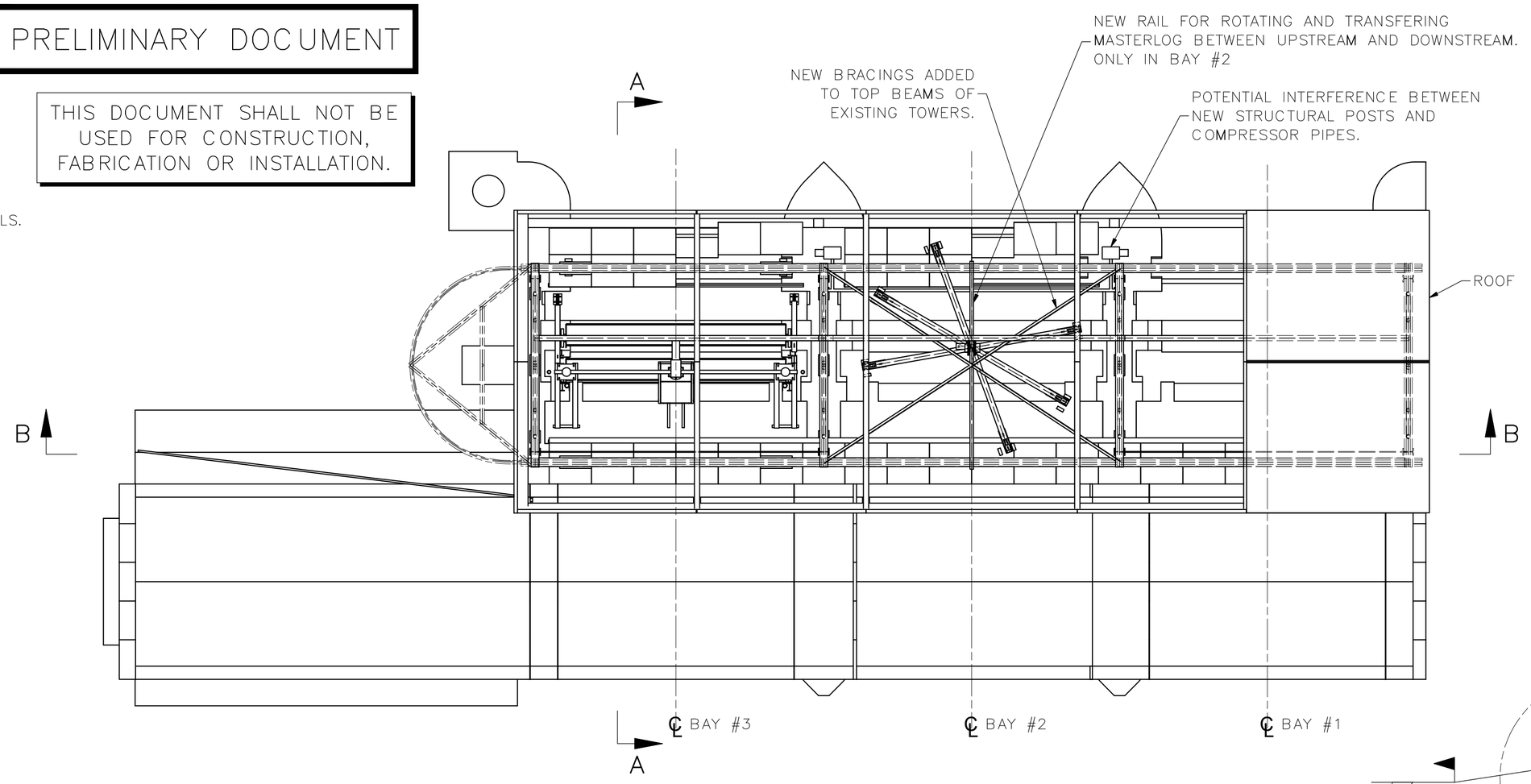

MONORAIL ALTERNATIVE #1 – EXISTING MONORAIL REFURBISHMENT
SCALE: 1:100

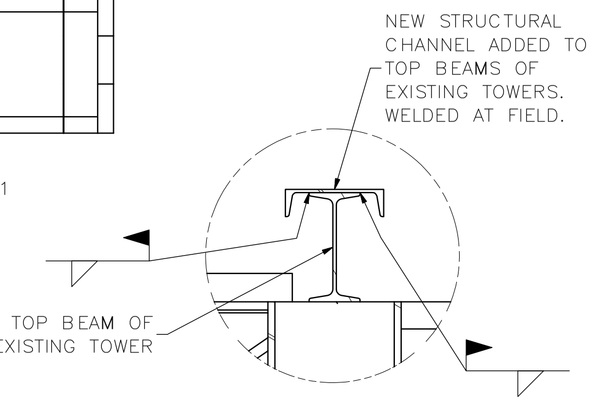

DETAIL D
SCALE: 1:10

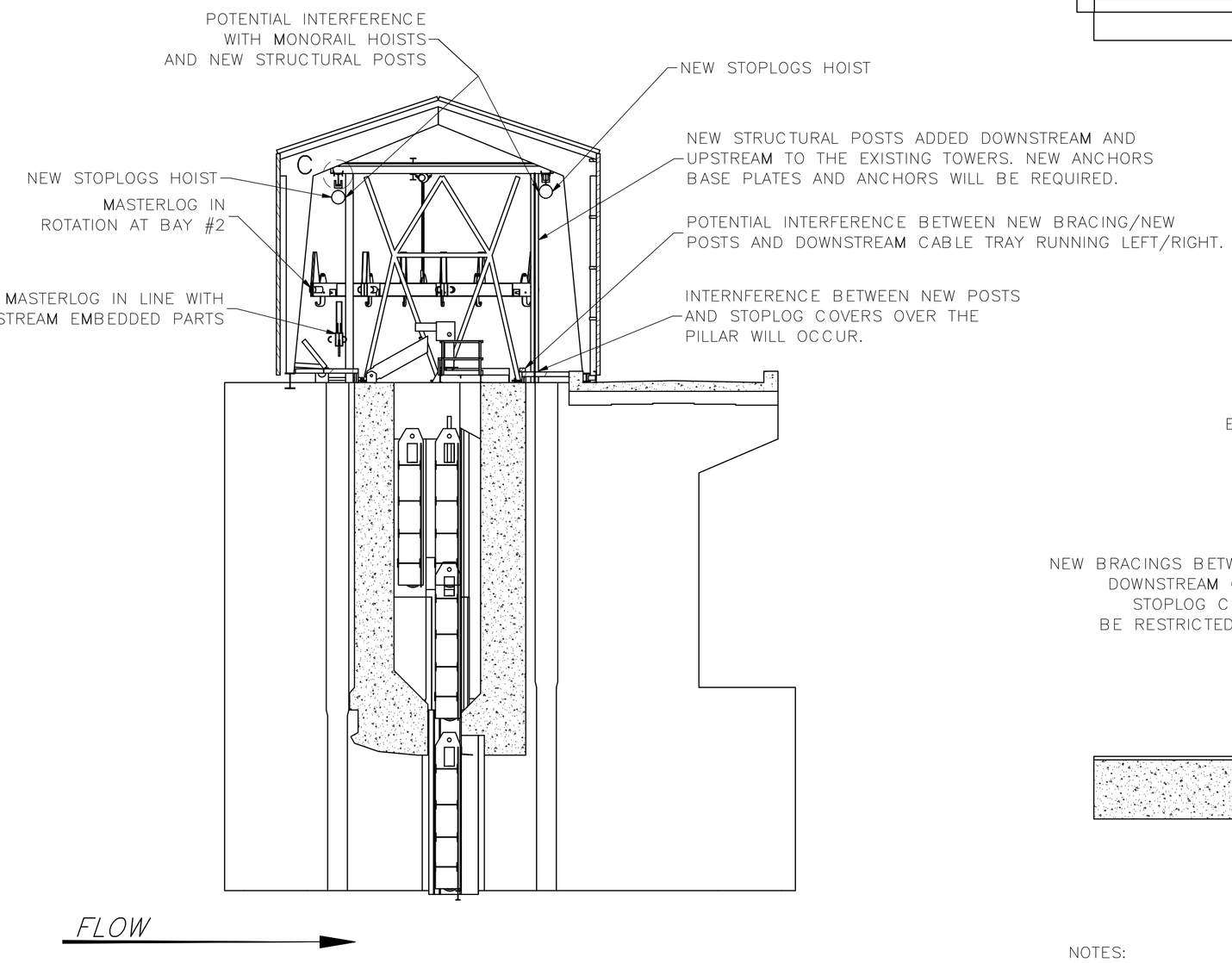

SECTION A
SCALE: 1:100

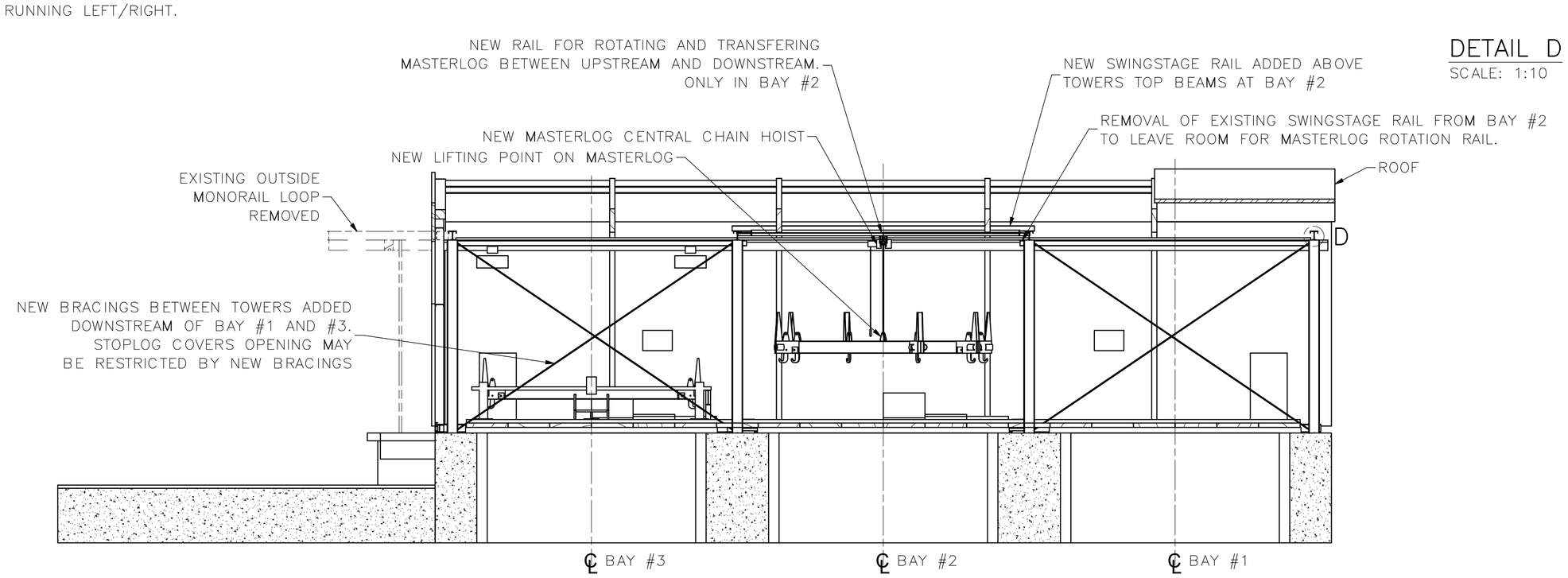

SECTION B
SCALE: 1:100

NOTES:
1. WITH MONORAIL ALTERNATIVE #1 AND #2, GATES MUST BE REMOVED THROUGH THE ROOF. SEE 190425-MONOALT2-D001 FOR LIFTING DETAILS.
2. ALL MONORAIL CONNEXIONS (SPLICED CONNEXIONS AND CONNECTIONS TO TOWER TOP BEAMS), BASE PLATES AND ANCHORS MUST BE INSPECTED IN DETAIL AND MODIFIED AS REQUIRED (FIELD).
3. SEE THE REFURBISHED MONORAIL STRUCTURE ALONE ON PAGE #2.

RD ÉNERGIE
NO.: 190425-NLH

This Drawing contains intellectual property of Nalcor Energy and shall not be copied or distributed in whole or in part without prior written consent from Nalcor Energy. Use of the drawing shall be restricted to purposes of prosecution of a contract with Nalcor Energy.

nalcor energy

NEWFOUNDLAND AND LABRADOR HYDRO
EBBEGUNBAEG CONTROL STRUCTURE

EBBEGUNBAEG MAJOR REFURBISHMENT PROGRAM
MONORAIL ALTERNATIVE #1 – EXISTING MONORAIL REFURBISHMENT

REFERENCE DRAWINGS		REVISIONS					
DWG.NO.	TITLE	NO.	DATE	DESCRIPTION	DWN.	DESIGN.	CHK.	APP'D
		6						
		5						
		4						
		3						
		2						
		1						
		0	2019-11-14	FOR COMMENTS, 80%	M.B.	M.B.	F.L.	

ELECT.	
CIVIL	
TRANS.	
MECH.	
P&C	
TELC.	

SCALE: AS NOTED
DESIGNED: M. BEAUDOIN, P.ENG
DRAWN: M. BEAUDOIN, P.ENG.
DATE: 2019-11-08
CHECKED: O. LONGPRÉ, P.ENG.
APPROVED: N/A

W.O. NO.

DWG. NO. A1 – 190425-MONOALT1-D001

PAGE 1 OF 2

REV. 0

C.A.D.

2021 Capital Projects over $500,000
Refurbish Ebbegunbaeg Control Structure, Attachment 1

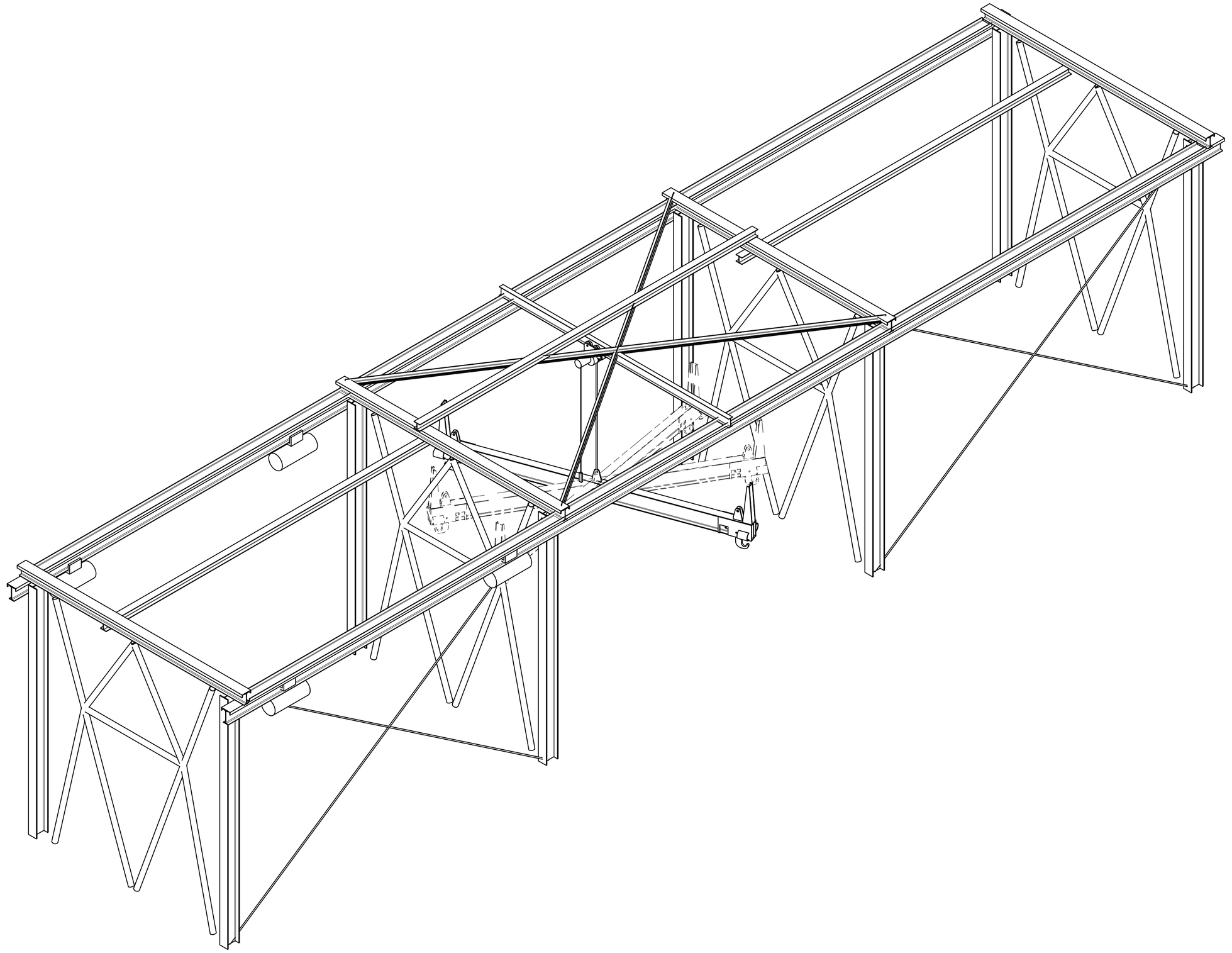

MONORAIL ALTERNATIVE #1 – EXISTING MONORAIL REFURBISHED
SCALE: 1:50

PRELIMINARY DOCUMENT

THIS DOCUMENT SHALL NOT BE USED FOR CONSTRUCTION, FABRICATION OR INSTALLATION.

RD ÉNERGIE
NO.: 190425–NLH

This Drawing contains intellectual property of Nalcor Energy and shall not be copied or distributed in whole or in part without prior written consent from Nalcor Energy. Use of the drawing shall be restricted to purposes of prosecution of a contract with Nalcor Energy.

nalcor energy

NEWFOUNDLAND AND LABRADOR HYDRO
EBBEGUNBAEG CONTROL STRUCTURE

EBBEGUNBAEG MAJOR REFURBISHMENT PROGRAM
MONORAIL ALTERNATIVE #1 – EXISTING MONORAIL REFURBISHMENT

REFERENCE DRAWINGS		REVISIONS					
DWG.NO.	TITLE	NO.	DATE	DESCRIPTION	DWN.	DESIGN.	CHK.	APP'D
		6						
		5						
		4						
		3						
		2						
		1						
		0	2019–11–14	FOR COMMENTS, 80%	M.B.	M.B.	F.L.	

ELECT.	SCALE: AS NOTED
CIVIL	DESIGNED: M. BEAUDOIN, P.ENG
TRANS.	DRAWN: M. BEAUDOIN, P.ENG.
MECH.	DATE: 2019–11–08
P&C	CHECKED: O. LONGPRÉ, P.ENG.
TELC.	APPROVED: N/A

W.O. NO.

DWG. NO. A1–190425–MONOALT1–D001 PAGE 2 OF 2

REV. 0

C.A.D.

PRELIMINARY DOCUMENT

THIS DOCUMENT SHALL NOT BE USED FOR CONSTRUCTION, FABRICATION OR INSTALLATION.

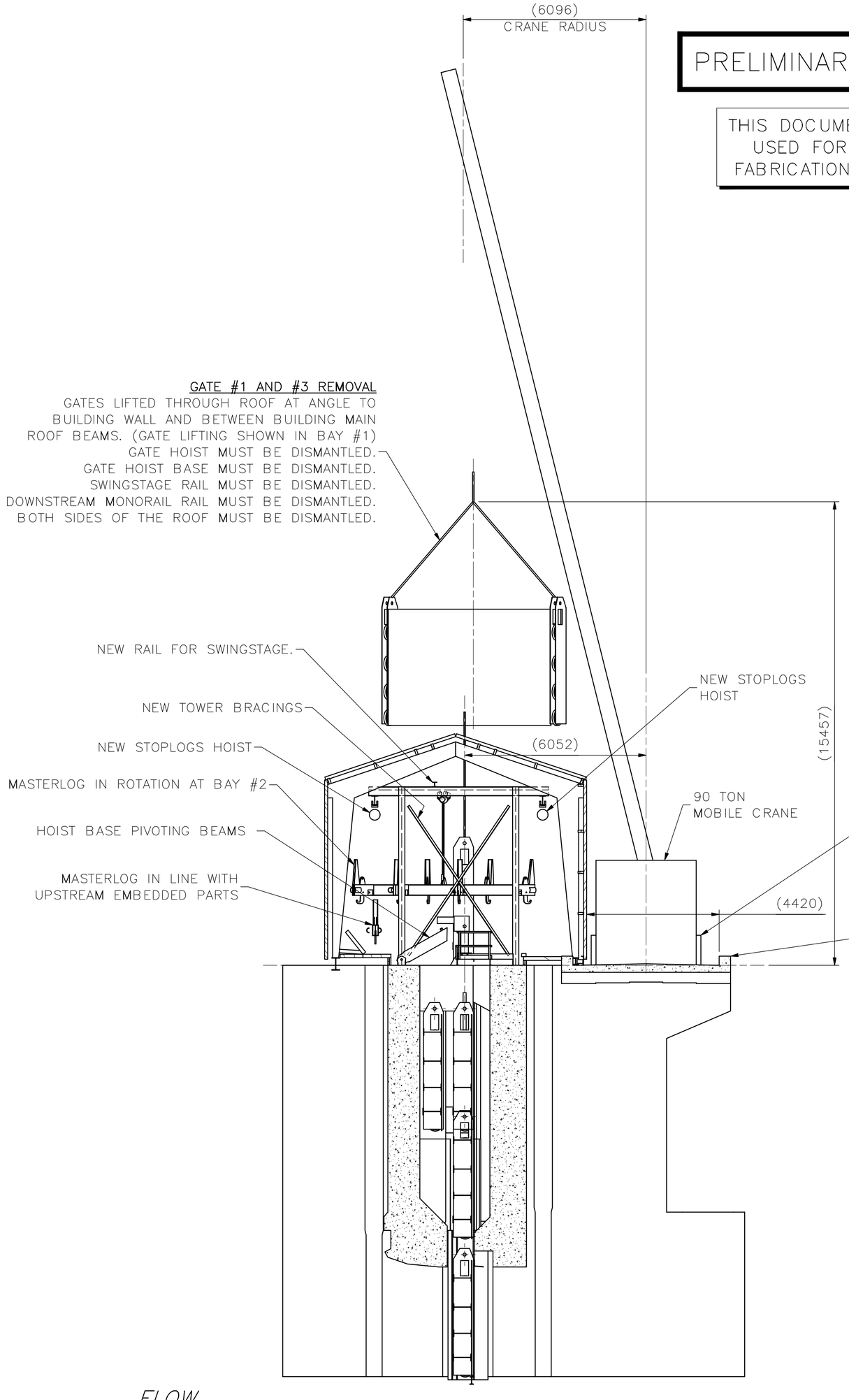

SECTION A
SCALE: 1:100

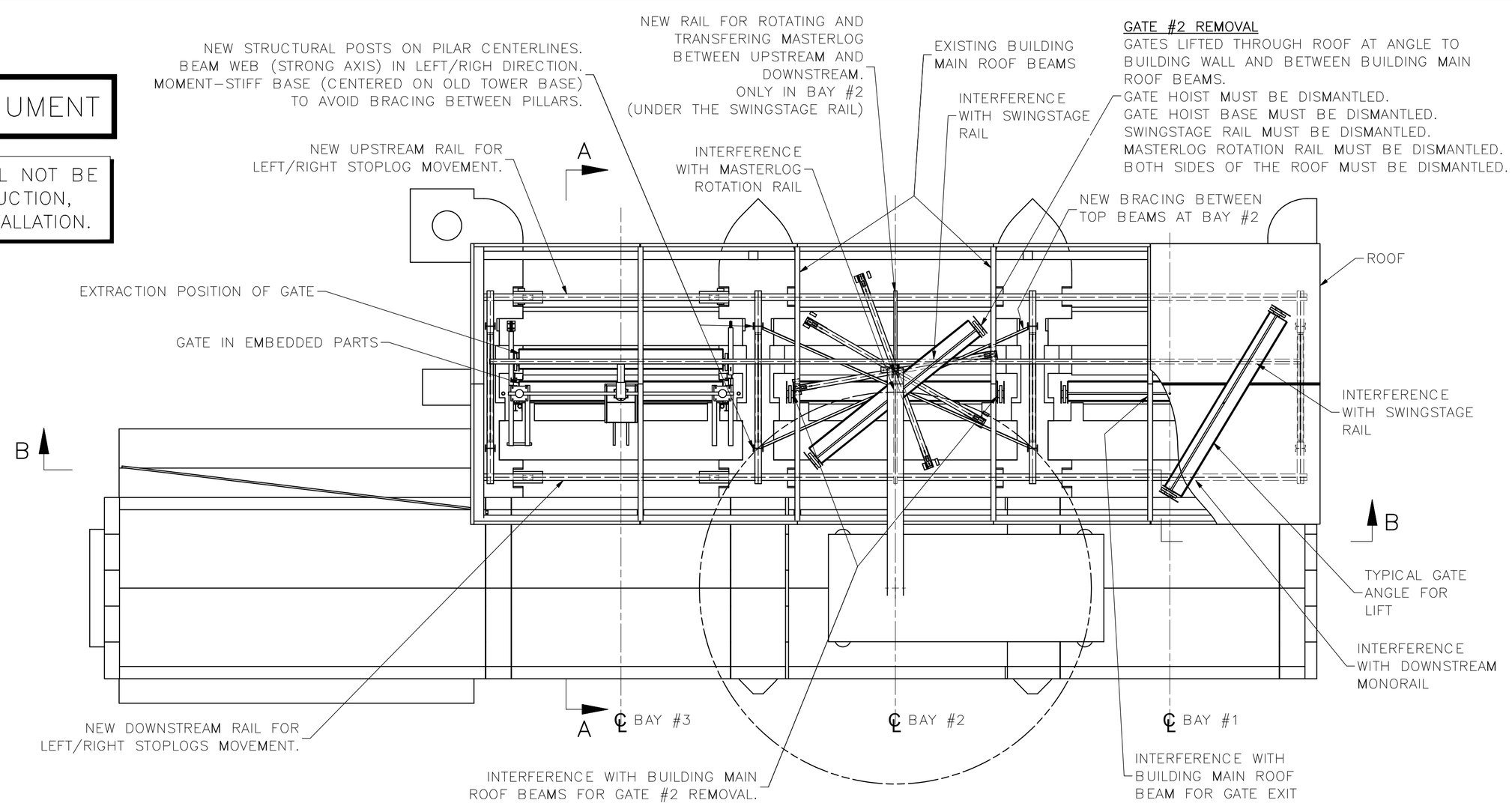

MONORAIL ALTERNATIVE #2 – NEW MONORAIL FOR STOPLOGS

SCALE: 1:100

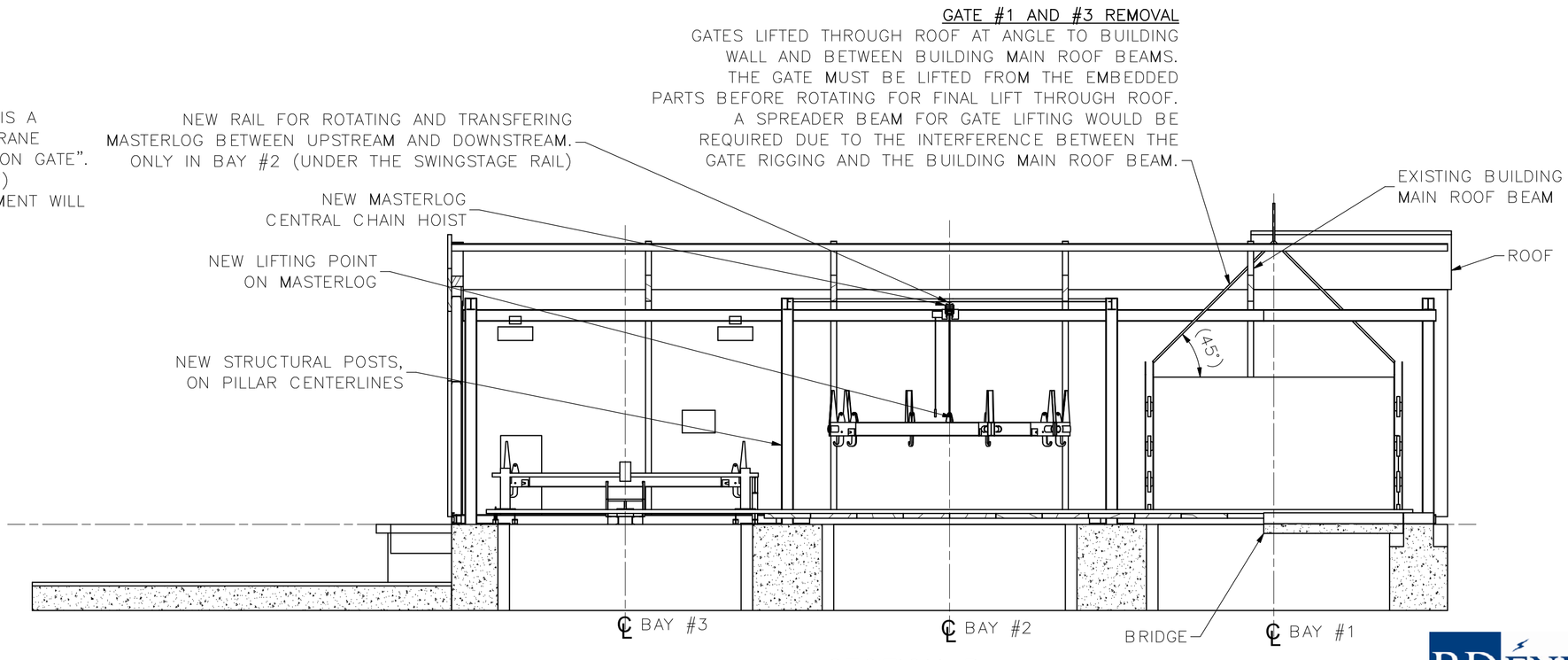

SECTION B
SCALE: 1:100

RD ÉNERGIE
NO.: 190425-NLH

NOTES:
1. SEE THE NEW MONORAIL STRUCTURE ALONE ON PAGE #2.

DWG.NO.	TITLE
REFERENCE DRAWINGS	

NO.	DATE	DESCRIPTION	DWN.	DESIGN.	CHK.	APP'D
6						
5						
4						
3						
2						
1						
0	2019-11-14	FOR COMMENTS, 80%	M.B.	M.B.	F.L.	

REVISIONS

This Drawing contains intellectual property of Nalcor Energy and shall not be copied or distributed in whole or in part without prior written consent from Nalcor Energy. Use of the drawing shall be restricted to purposes of prosecution of a contract with Nalcor Energy.

nalcor energy

NEWFOUNDLAND AND LABRADOR HYDRO
EBBEGUNBAEG CONTROL STRUCTURE

ELECT.	SCALE: AS NOTED
CIVIL	DESIGNED: M. BEAUDOIN, P.ENG
TRANS.	DRAWN: M. BEAUDOIN, P.ENG.
MECH.	DATE: 2019-11-08
P&C	CHECKED: O. LONGPRÉ, P.ENG.
TELC.	APPROVED: N/A

EBBEGUNBAEG MAJOR REFURBISHMENT PROGRAM

MONORAIL ALTERNATIVE #2 – NEW MONORAIL FOR STOPLOGS

W.O. NO.

DWG. NO. A1-190425-MONOALT2-D001 PAGE 1 OF 2

REV. 0

C.A.D.

2021 Capital Projects over $500,000
Refurbish Ebbegunbaeg Control Structure, Attachment 1

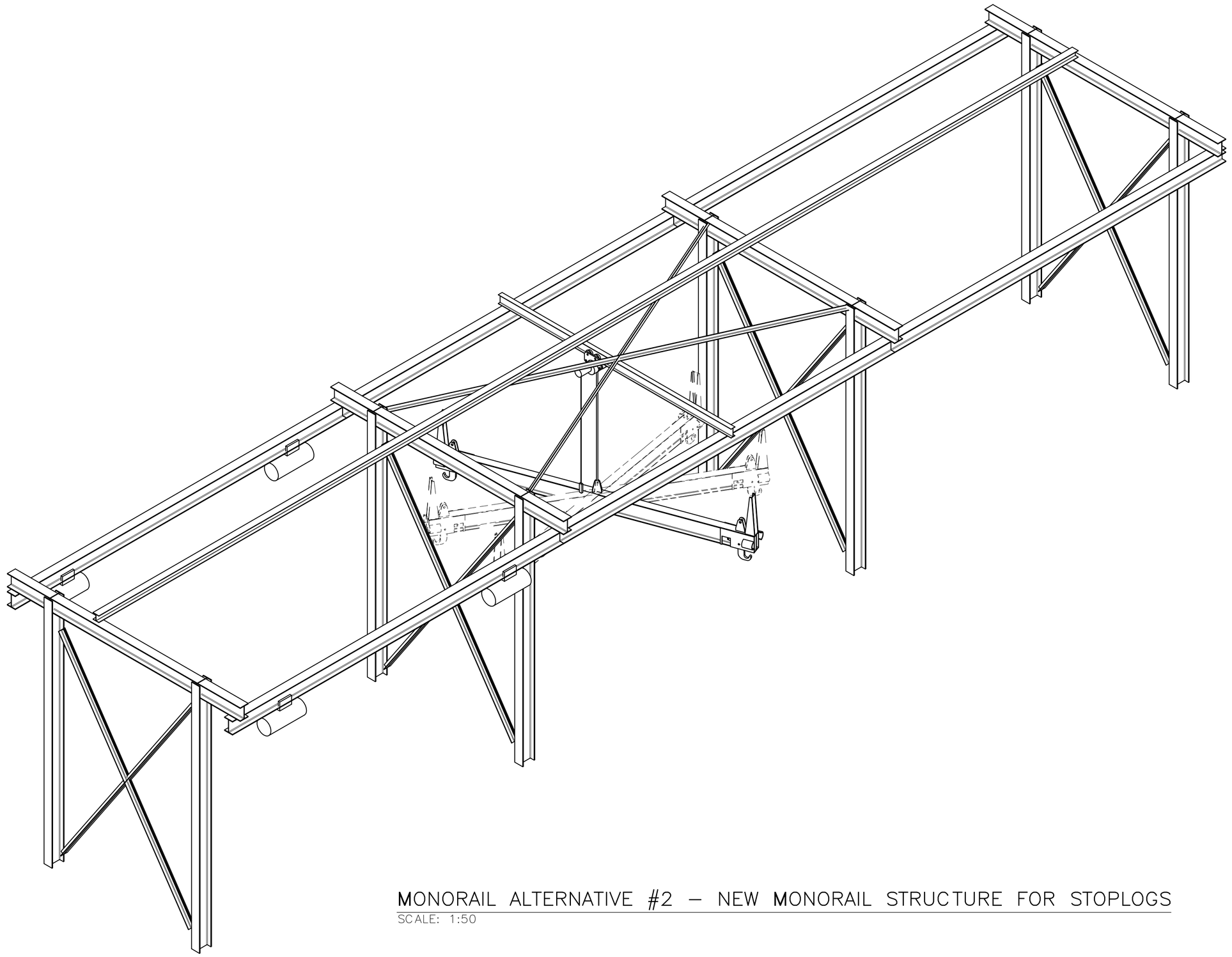

MONORAIL ALTERNATIVE #2 – NEW MONORAIL STRUCTURE FOR STOPLOGS
SCALE: 1:50

PRELIMINARY DOCUMENT

THIS DOCUMENT SHALL NOT BE USED FOR CONSTRUCTION, FABRICATION OR INSTALLATION.

RD ÉNERGIE
NO.: 190425–NLH

This Drawing contains intellectual property of Nalcor Energy and shall not be copied or distributed in whole or in part without prior written consent from Nalcor Energy. Use of the drawing shall be restricted to purposes of prosecution of a contract with Nalcor Energy.

nalcor energy

NEWFOUNDLAND AND LABRADOR HYDRO
EBBEGUNBAEG CONTROL STRUCTURE

DWG.NO.	TITLE
	REFERENCE DRAWINGS

NO.	DATE	DESCRIPTION	DWN.	DESIGN.	CHK.	APP'D
6						
5						
4						
3						
2						
1						
0	2019–11–14	FOR COMMENTS, 80%	M.B.	M.B.	F.L.	
		REVISIONS				

ELECT.	SCALE: AS NOTED
CIVIL	DESIGNED: M. BEAUDOIN, P.ENG
TRANS.	DRAWN: M. BEAUDOIN, P.ENG.
MECH.	DATE: 2019–11–08
P&C	CHECKED: O. LONGPRÉ, P.ENG.
TELC.	APPROVED: N/A

EBBEGUNBAEG MAJOR REFURBISHMENT PROGRAM
MONORAIL ALTERNATIVE #2 – NEW MONORAIL FOR STOPLOGS

W.O. NO.

DWG. NO. A1 – 190425–MONOALT2–D001 PAGE 2 OF 2

REV. 0

C.A.D.

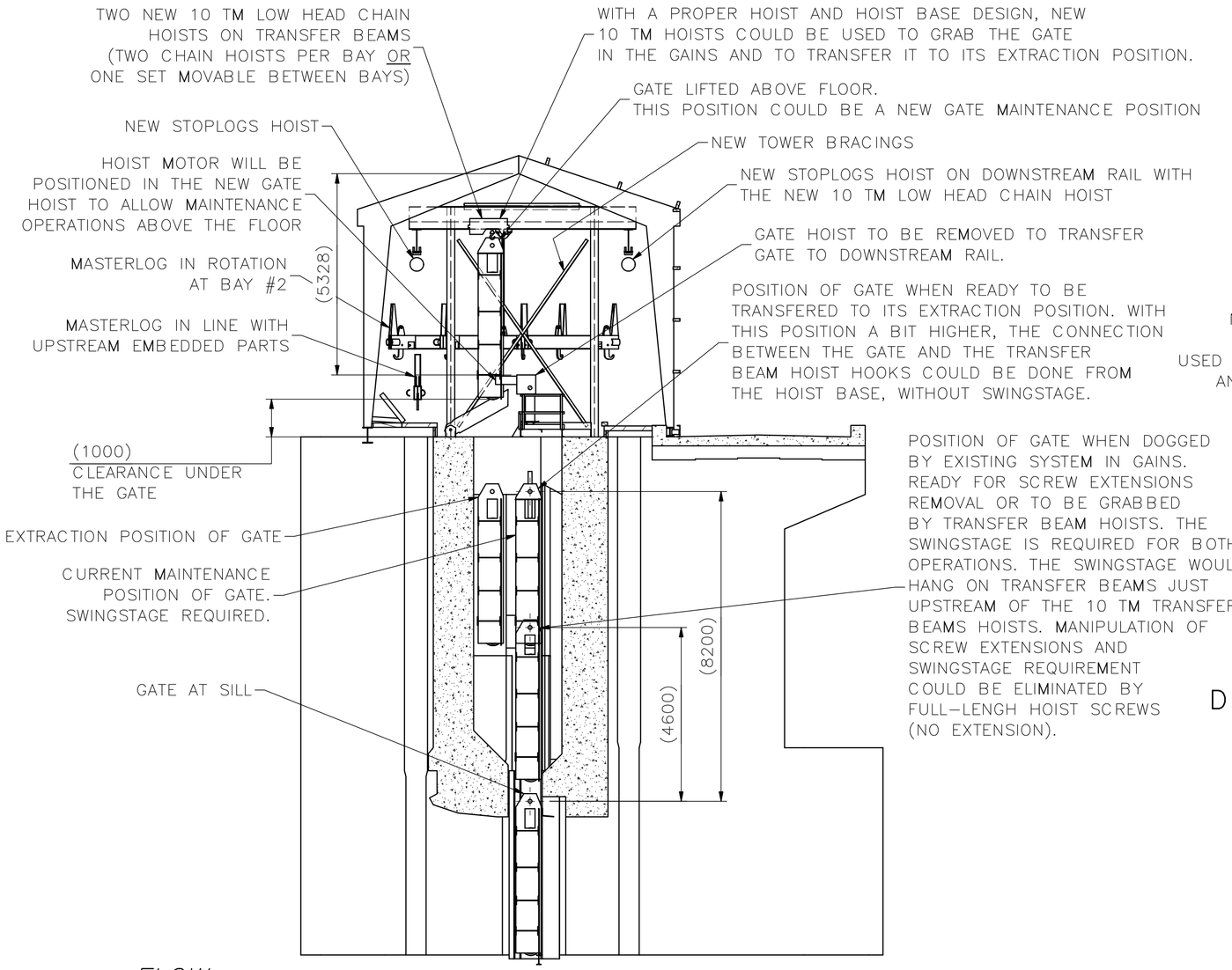

SECTION A
SCALE: 1:100

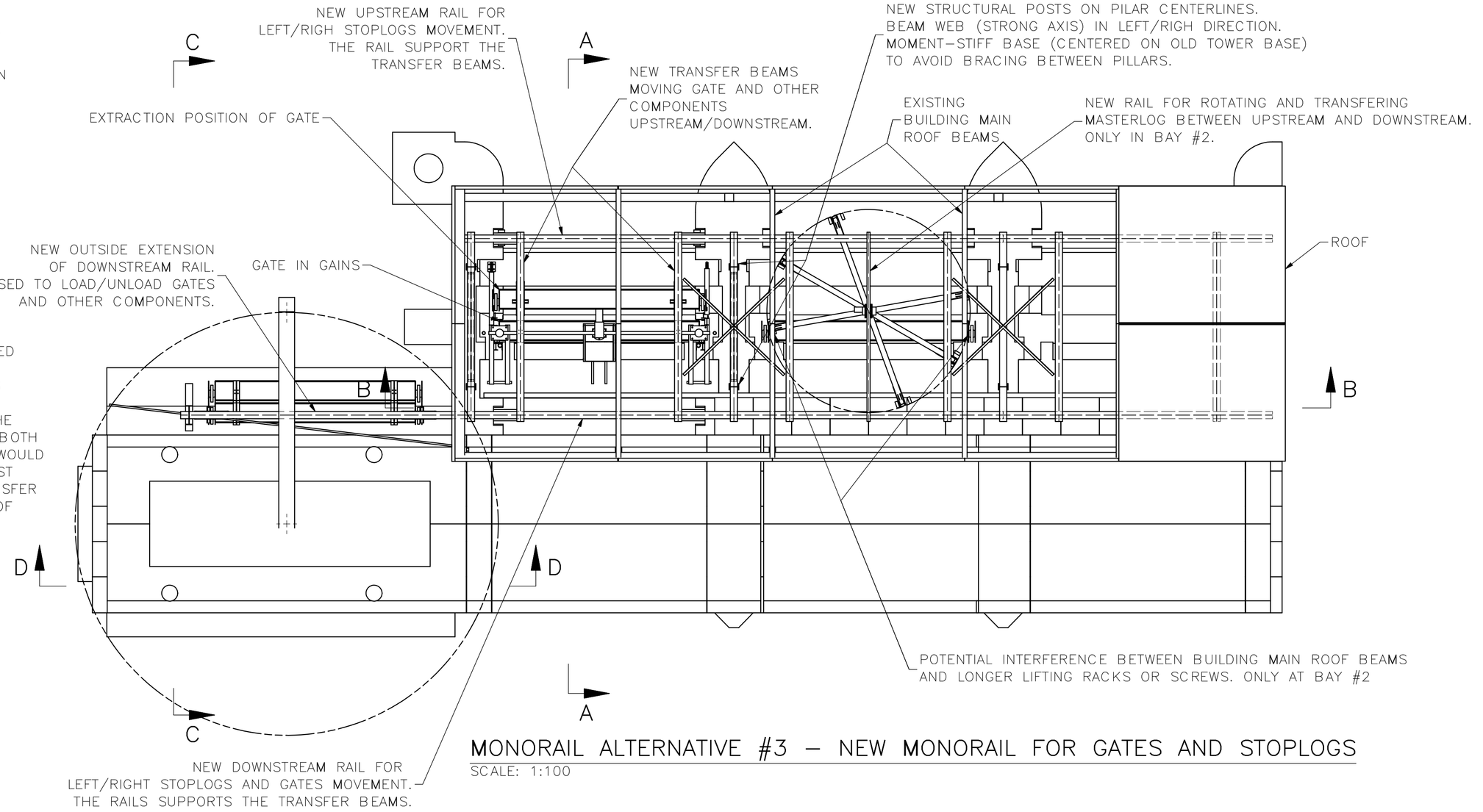

MONORAIL ALTERNATIVE #3 – NEW MONORAIL FOR GATES AND STOPLOGS
SCALE: 1:100

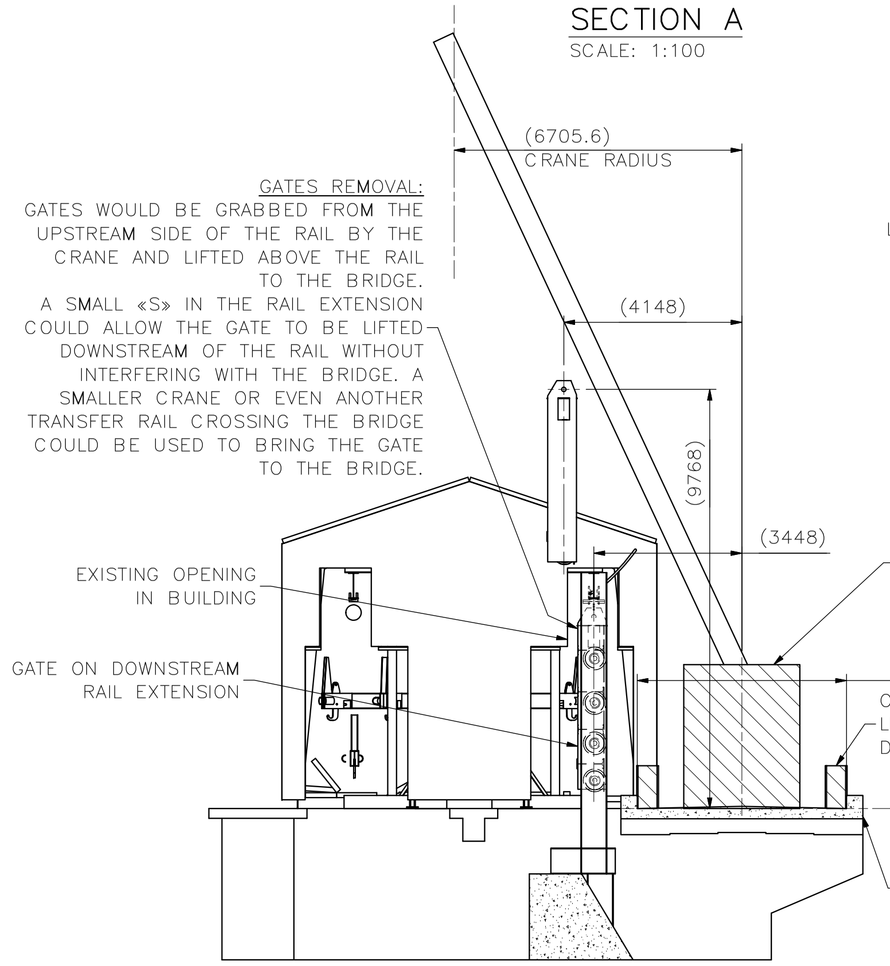

SECTION C
SCALE: 1:100

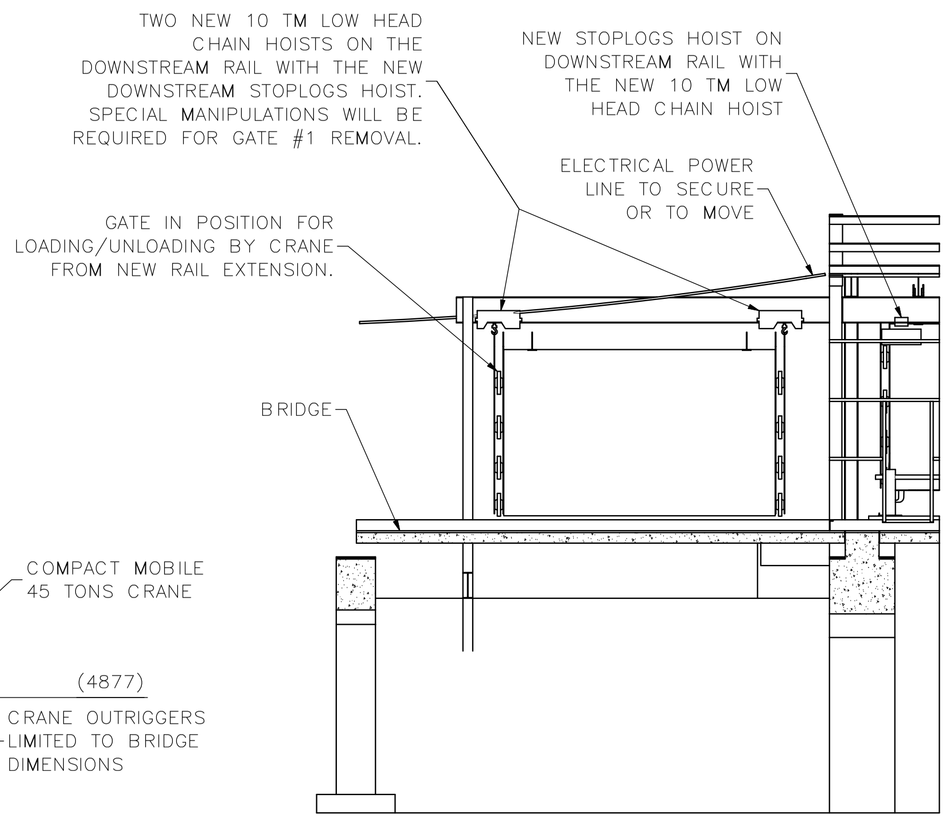

SECTION D
SCALE: 1:100

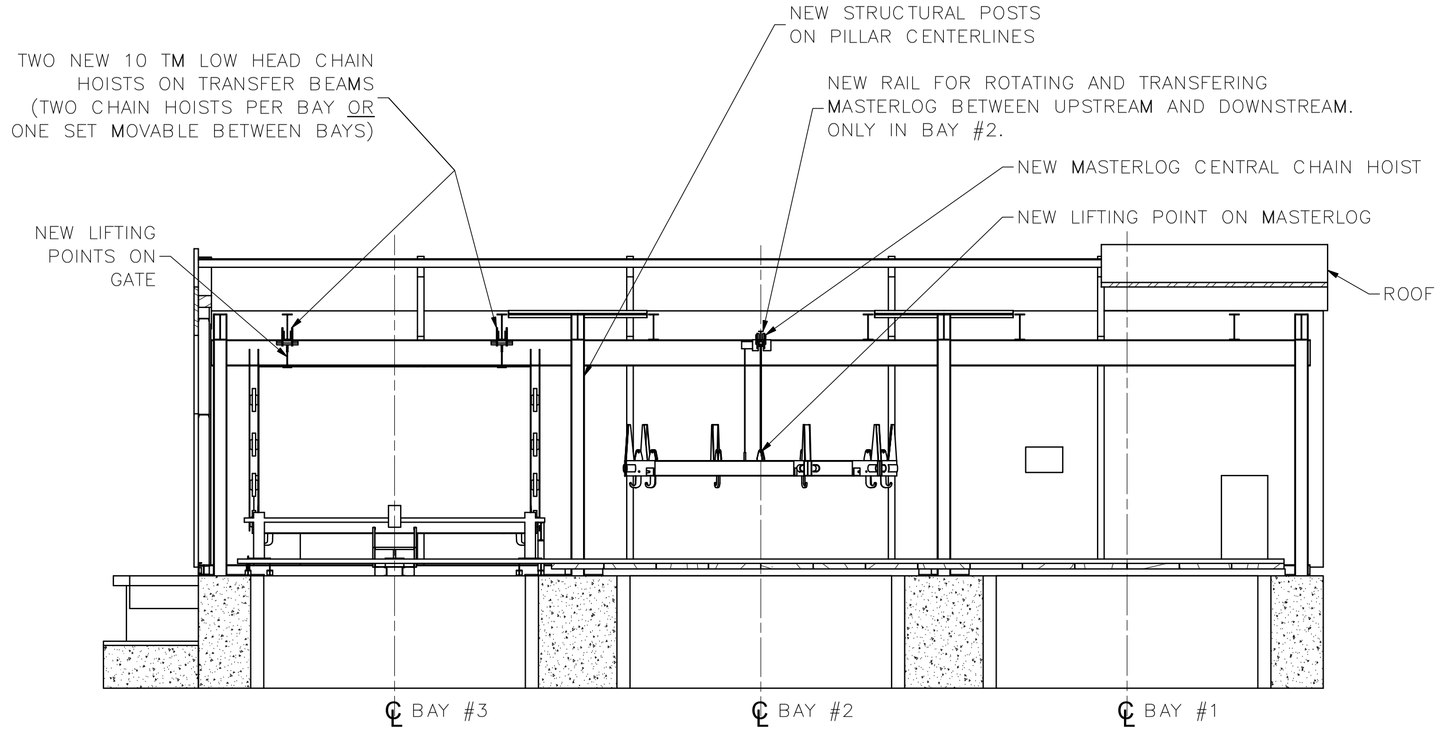

SECTION B
SCALE: 1:100

THIS DOCUMENT SHALL NOT BE USED FOR CONSTRUCTION, FABRICATION OR INSTALLATION.

PRELIMINARY DOCUMENT

NOTES:
1. SEE THE NEW MONORAIL STRUCTURE ALONE ON PAGE #2.

RD ÉNERGIE
NO.: 190425-NLH

This Drawing contains intellectual property of Nalcor Energy and shall not be copied or distributed in whole or in part without prior written consent from Nalcor Energy. Use of the drawing shall be restricted to purposes of prosecution of a contract with Nalcor Energy.

nalcor energy

NEWFOUNDLAND AND LABRADOR HYDRO
EBBEGUNBAEG CONTROL STRUCTURE

ELECT.	SCALE: AS NOTED
CIVIL	DESIGNED: M. BEAUDOIN, P.ENG
TRANS.	DRAWN: M. BEAUDOIN, P.ENG.
MECH.	DATE: 2019-11-08
P&C	CHECKED: O. LONGPRÉ, P.ENG.
TELC.	APPROVED: N/A

EBBEGUNBAEG MAJOR REFURBISHMENT PROGRAM
MONORAIL ALTERNATIVE #3 – NEW MONORAIL FOR GATES AND STOPLOGS

W.O. NO.

DWG. NO. A1-190425-MONOALT3-D001 PAGE 1 OF 2

REV. 0

C.A.D.

DWG.NO.	TITLE
REFERENCE DRAWINGS	

NO.	DATE	DESCRIPTION	DWN.	DESIGN.	CHK.	APP'D
6						
5						
4						
3						
2						
1						
0	2019-11-14	FOR COMMENTS, 80%	M.B.	M.B.	F.L.	

REVISIONS

2021 Capital Projects over $500,000
Refurbish Ebbegunbaeg Control Structure, Attachment 1

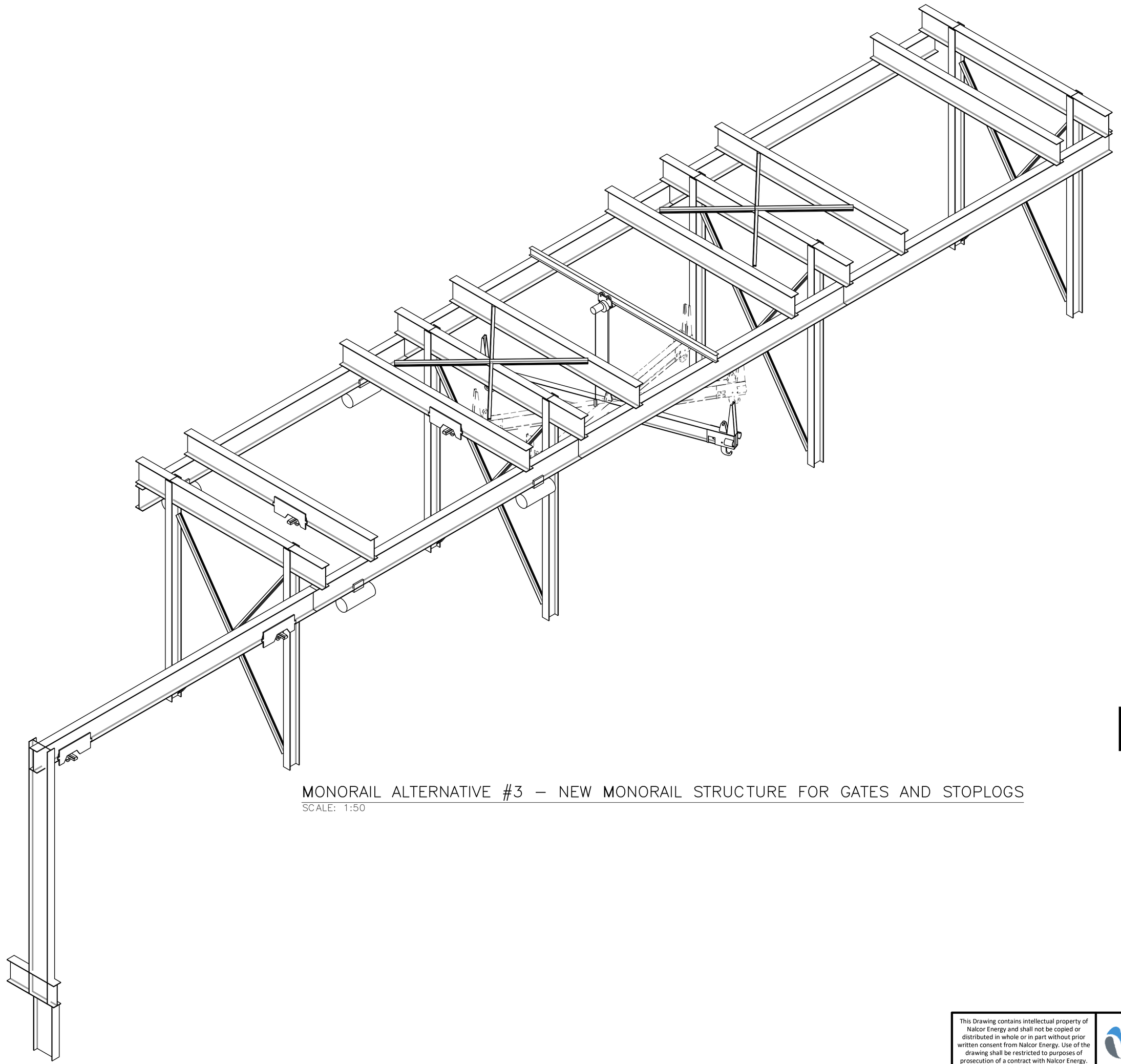

MONORAIL ALTERNATIVE #3 – NEW MONORAIL STRUCTURE FOR GATES AND STOPLOGS
SCALE: 1:50

PRELIMINARY DOCUMENT

THIS DOCUMENT SHALL NOT BE USED FOR CONSTRUCTION, FABRICATION OR INSTALLATION.

RD ÉNERGIE
NO.: 190425–NLH

This Drawing contains intellectual property of Nalcor Energy and shall not be copied or distributed in whole or in part without prior written consent from Nalcor Energy. Use of the drawing shall be restricted to purposes of prosecution of a contract with Nalcor Energy.

nalcor energy

NEWFOUNDLAND AND LABRADOR HYDRO
EBBEGUNBAEG CONTROL STRUCTURE

EBBEGUNBAEG MAJOR REFURBISHMENT PROGRAM
MONORAIL ALTERNATIVE #3 – NEW MONORAIL FOR GATES AND STOPLOGS

DWG.NO.	TITLE
	REFERENCE DRAWINGS

NO.	DATE	DESCRIPTION	DWN.	DESIGN.	CHK.	APP'D
6						
5						
4						
3						
2						
1						
0	2019–11–14	FOR COMMENTS, 80%	M.B.	M.B.	F.L.	
REVISIONS						

ELECT.	SCALE: AS NOTED
CIVIL	DESIGNED: M. BEAUDOIN, P.ENG
TRANS.	DRAWN: M. BEAUDOIN, P.ENG.
MECH.	DATE: 2019–11–08
P&C	CHECKED: O. LONGPRÉ, P.ENG.
TELC.	APPROVED: N/A

W.O. NO.

DWG. NO. A1 – 190425–MONOALT3–D001 PAGE 2 OF 2

REV. 0

C.A.D.

4. Boiler Condition Assessment and Misc. Upgrades - Holyrood



2021 Capital Budget Application

Boiler Condition Assessment and Miscellaneous Upgrades Holyrood

July 2020

A report to the Board of Commissioners of Public Utilities

newfoundland labrador hydro
a nalcor energy company

Executive Summary

To support the continued safe and reliable operation of the Holyrood Thermal Generating Station ("Holyrood TGS") at its rated output through the 2021–2022 winter operating season,[1] Newfoundland and Labrador Hydro ("Hydro") is proposing to continue with the annual Boiler Condition Assessment and Miscellaneous Upgrades project in 2021.

This project has been completed on an annual basis since 2017 and has been integral in supporting the safe and reliable operation of steam supply systems at the Holyrood TGS. As Hydro has committed to having the Holyrood TGS fully available until March 31, 2022, Hydro believes it is prudent to continue this project in 2021.

The boilers and associated high-energy piping are exposed to multiple aggressive degradation mechanisms and require regular inspection and analysis to monitor wear rates and plan interventions. Failure of any steam system while in service could result in generation outages with duration of weeks or months, depending on the magnitude of the failure. The continuation of the Boiler Condition Assessment and Miscellaneous Upgrades Program into 2021 is required to support Hydro's safety and reliability standards, including Hydro's ability to meet customer demand during peak periods.

The project will be completed in 2021. The majority of the work will be performed during the planned outages for each generating unit. The project estimate for this project is $3,000,000.

[1] In a letter dated February 14, 2020, Hydro advised the Public Utilities Board of its decision to extend operation of the Holyrood TGS as a generating facility to March 31, 2022.

Contents

Executive Summary i
1.0 Introduction 1
2.0 Background 1
2.1 Existing System 1
2.2 Operating Experience 1
3.0 Analysis 2
3.1 Identification of Alternatives 2
3.2 Evaluation of Alternatives 2
3.2.1 Deferral 2
3.2.2 Continuation of the Boiler Condition Assessment and Miscellaneous Upgrades Program 3
3.3 Recommended Alternative 3
4.0 Project Description 4
5.0 Conclusion 5

1.0 Introduction

In 2017, Hydro commenced a three-year Boiler Condition Assessment and Miscellaneous Upgrades Program for the Holyrood TGS. The program was extended for another year in 2020.[2] The scope for the program included a Level 2 condition assessment related to internal components of the main steam generators (boilers) and associated external high-energy piping. Throughout the duration of the Boiler Condition Assessment and Miscellaneous Upgrades Program, Hydro has proposed and executed various upgrades and replacements to support the reliable operation of the steam generation equipment. This proposal entails the extension of the program for 2021.

2.0 Background

2.1 Existing System

The Holyrood TGS is equipped with three horizontal steam turbine generating units. All three units can be used for power production and Unit 3 is also capable of functioning as a synchronous condenser to assist with system voltage regulation. Each unit is supplied with steam by one of three boilers, each of which is dedicated to a generating unit and fired with bunker C fuel.

The existing main steam generators (boilers) and associated high-energy piping (main steam piping, hot reheat piping, cold reheat piping, and high pressure feed water piping) are exposed to high wear mechanisms including high temperatures, high pressure, corrosive fluids, and erosive flows.

2.2 Operating Experience

Boilers 1 and 2 were designed by Combustion Engineering and began operating in 1969 and 1970, respectively. Each of these units has operated for approximately 210,000 hours since they were put in service. Boiler 3 was designed by the Babcock & Wilcox Company and began operating in 1979. This unit has operated for approximately 170,000 hours since it was put in service.

The boilers and associated steam supply systems are the focus of annual Boiler Condition Assessment and Miscellaneous Upgrade projects. A specialized boiler service contractor has been retained under a maintenance service agreement to perform all remedial work on the boiler including the annual Boiler

[2] Approved in Board Order No. P.U. 14(2020).

Condition Assessment and Miscellaneous Upgrades projects. Examples of deficiencies discovered in past condition assessments have included:

- Thinning of the boiler tube walls;
- Cracking of various components that are subject to thermal cycling;
- Critical damage to material or failure of structural components;
- Critical damage to refractory materials;
- Duct erosion; and
- Soot blockages.

Deficiencies identified during inspections are typically corrected during the next available outage period unless they are determined to be critical, in which case they are addressed immediately.

3.0 Analysis

3.1 Identification of Alternatives

Hydro evaluated the following alternatives:

- Deferral, and
- Continuation of the Boiler Condition Assessment and Miscellaneous Upgrades Program.

3.2 Evaluation of Alternatives

3.2.1 Deferral

Given Hydro's commitment to have the Holyrood TGS fully available for generation until March 31, 2022, deferral of this project is not viable. Under conditions of normal operation, the deferral of this project increases the risk of failure while in service, which could result in unit outages during Hydro's 2021–2022 winter operating season. Should such a failure occur during in-service operation, extensive downtime would be required to access internal boiler system components and undertake scaffolding and disassembly work. As such, this alternative is not viable as it presents an unacceptable risk to Hydro's ability to safely and reliably meet customer needs during peak periods.

3.2.2 Continuation of the Boiler Condition Assessment and Miscellaneous Upgrades Program

Under this alternative, the condition of internal components of the boilers and associated external high energy piping are assessed through inspections. High-risk issues are corrected immediately upon identification. Annual inspection and assessment of the condition of boiler system components enables early identification of deteriorated components that may fail in the near term, allowing for planned intervention. Components showing moderate deterioration are monitored annually and deterioration rates are trended, allowing for longer-term planning of interventions where appropriate. Hydro has found this approach to be effective in supporting the safe and reliable operation of the Holyrood TGS boilers.

3.3 Recommended Alternative

Hydro recommends the extension of the Boiler Condition Assessment and Miscellaneous Upgrades Program for 2021.

Boiler and high energy piping components are subjected to deterioration mechanisms such as wear, corrosion and thermal cracking. Regular inspections and condition assessments are required to monitor deterioration rates and perform remedial work an annual basis to reduce risk of failures during operation. This approach allows Hydro to complete repairs in a planned, measured manner while continuing to safely and reliably operate the Holyrood TGS boilers. Hydro's experience with this approach has proven effective; therefore, Hydro proposes to continue the Boiler Condition Assessment and Miscellaneous Upgrades Program in 2021.

The timing of the in-service of the Muskrat Falls assets and the execution of the proposed steam generation related 2021 capital projects presents a unique circumstance. Should the successful integration and demonstrated reliability of the Muskrat Falls assets occur prior to March 31, 2022[3] and/or Hydro have clear evidence with respect to the in-service date of the Muskrat Falls assets prior to the execution of the proposed 2021 capital projects, careful consideration will be given to the necessity of executing the full scope of steam generation related capital projects.[4] Where there is opportunity to

[3] Planned retirement date for Units 1 and 2 and steam generation components of Unit 3 at Holyrood TGS.
[4] Where work may have already commenced on the proposed 2021 capital projects, Hydro will consider options for reducing the remaining portion(s) of the project scope and, thus capital costs, as appropriate and technically feasible.

mitigate some portion of capital costs, Hydro will ensure prudency in its capital expenditures and notify the Board of such change, as appropriate.

4.0 Project Description

The primary piece of this work is to perform a Level 2 condition assessment on the internal components of the boilers and associated external high energy piping to determine what, if any, refurbishment or replacements are required prior to the 2021–2022 winter operating season. The project also includes completion of miscellaneous upgrades identified in the 2020 investigation and completion of the required interventions identified during the 2021 assessment work that are necessary to support safe and reliable operation through the 2021–2022 winter.

Miscellaneous upgrades will include the replacement of boiler expansion joints and boiler refractory, which was identified in the 2020 condition assessment as requiring replacement. Additionally, for those upgrades that are material in dollar value and meet capitalization criteria, Hydro proposes to communicate these items to the Board of Commissioners of Public Utilities in its 2021 Capital Expenditures and Carryover report.

The detailed scope of the boiler condition assessment follows the Inspection and Test Plan ("ITP") that was prepared for the Holyrood TGS by the Original Equipment Manufacturer ("OEM") for Unit 1 and Unit 2 boilers, Alstom, and engineering consulting firm AMEC NSS. The ITP covers all boiler pressure parts and high energy piping. Inspection and test scope, assessment methods, and intervals were developed based on recommendations of the OEM and AMEC NSS. Hydro will contract a specialized boiler service company to complete boiler and high-energy piping assessments and repairs. Hydro personnel will assist the service company when required, oversee the work protection application, and provide overall management and liaison for the upgrades.

The project estimate is shown in Table 1.

Table 1: Project Estimate ($000)

Project Cost	2021	2022	Beyond	Total
Material Supply	162.0	0.0	0.0	**162.0**
Labour	375.1	0.0	0.0	**375.1**
Consultant	0.0	0.0	0.0	**0.0**
Contract Work	2,054.3	0.0	0.0	**2,054.3**
Other Direct Costs	0.0	0.0	0.0	**0.0**
Interest and Escalation	149.5	0.0	0.0	**149.5**
Contingency	259.1	0.0	0.0	**259.1**
Total	**3,000.0**	**0.0**	**0.0**	**3,000.0**

The condition assessment and upgrade work will take place during the outage period for each of the three boilers. The anticipated project schedule is shown in Table 2.

Table 2: Project Schedule

Activity	Start Date	End Date
Planning:		
Complete project planning	January 2021	January 2021
Procurement:		
Order long lead parts	February 2021	March 2021
Construction:		
Perform condition assessment and upgrade work.	April 2021	October 2021
Closeout:		
Prepare closeout documentation.	November 2021	December 2021

5.0 Conclusion

To support the continued safe and reliable operation of the Holyrood TGS through the 2021–2022 winter operating season, Hydro recommends continuing the Boiler Condition Assessment and Miscellaneous Upgrades Program in 2021. This program has historically been effective and supports the optimal timing of refurbishment and replacement. This measured, planned approach is prudent and supports the safe and reliable operation of the boilers and high-energy piping.

5. Upgrade Waste Water Equalization System - Holyrood



2021 Capital Budget Application

Upgrade Waste Water Equalization System

Holyrood

July 2020

A report to the Board of Commissioners of Public Utilities

newfoundland labrador hydro
a nalcor energy company

Executive Summary

The waste water equalization system is required to ensure that waste effluent is properly treated prior to its release into the environment and is vital to the operation of the Holyrood Thermal Generating Station ("Holyrood TGS"). The Holyrood TGS waste water equalization system will remain in service post-steam.

The waste water equalization system at the Holyrood TGS consists of two large concrete basins which contain the effluent and facilitate the removal of suspended solids and the adjustment of pH levels. These basins are enclosed by a pre-engineered steel building that houses the mechanical and electrical equipment necessary to treat the effluent and prevents precipitation and debris from entering the equalization basins. The waste water basin building is deteriorated and poses a safety concern for employees due to mold growth and corroded structural steel members. Operationally, the effluent recirculation/transfer system does not function as required to ensure proper treatment of the effluent.

To address these issues and support the continued safe and reliable treatment of waste effluent, Hydro proposes to upgrade the waste water equalization system.

The scope of work will be completed over two years and is estimated to cost approximately $2,361,100.

Contents

Executive Summary i
1.0 Introduction 1
2.0 Background 1
2.1 Existing System 1
2.2 Operating Experience 2
3.0 Justification 4
4.0 Analysis 4
4.1 Identification of Alternatives 4
4.2 Evaluation of Alternatives 4
4.2.1 Deferral 4
4.2.2 Replace the Waste Water Basin Building 5
4.2.3 Replace the Waste Water Basin Building with a Floating Cover System 5
4.3 Recommended Alternative 5
5.0 Project Description 6
6.0 Conclusion 7

List of Attachments

Attachment 1: Department of Municipal Affairs and Environment Certificate of Approval

Attachment 2: Bio-aerosol Assessment Waste Water Storage Building

1.0 Introduction

The Holyrood Thermal Generating Station ("Holyrood TGS") produces large volumes of effluent that must be properly treated and disposed of in accordance with applicable regulatory requirements. The effluent is categorized as either periodic or continuous, depending on its source. Continuous effluent is created through the thermal plant's floor drains, boiler blow down lines, clarifier blow down lines and general service cooling tanks. Periodic effluent originates from air heater washes, boiler washes, batch reactor waste, and landfill leachate. Treatment requirements differ and are determined based on the type of effluent.

The waste water equalization system at the Holyrood TGS consists of two large concrete basins which contain the effluent and enable the removal of suspended solids and the adjustment of pH levels. These basins are enclosed by a pre-engineered steel building that houses the mechanical and electrical equipment necessary to treat the effluent and prevent precipitation and debris from entering the equalization basins.

The Holyrood TGS will continue to produce effluent during post steam operations. Leachate from the on-site landfill, where boiler ash is disposed of on an annual basis, will continue to be processed in accordance with the Certificate of Approval, which is provided in Attachment 1. Additionally, effluent generated through building floor drains and general service cooling water, which is required during synchronous condense operation, flows through the continuous basin. The waste water equalization system will remain in service during post-steam operations at the Holyrood TGS. Presently, the waste water basin building and its associated equipment are in poor condition. The presence of mold and corroded building components has created a safety concern for the personnel that are required to enter the facility. Mechanical and electrical equipment associated with the treatment system is unreliable and is hindering the effluent treatment process. The facility requires refurbishment to support safe and reliable operation.

2.0 Background

2.1 Existing System

The waste water equalization system was installed in 1992 and consists of two large concrete basins, enclosed by a pre-engineered steel building. The basins reduce suspended solid content through processes of retention and particle settling prior to releasing the continuous effluent into the waters of

Indian Pond. They also transfer periodic effluent to the waste water treatment plant. Each basin is equipped with a recirculation system that includes submersible pumps and a piping network to recirculate the effluent. This system assists with the admixture of chemicals required for pH level adjustments to the continuous basin effluent and also prevents the build-up of sludge along the basin floor of the periodic basin. The continuous basin is cleaned annually, while the periodic basin is typically drained and cleaned on a four-year frequency.

The waste water basin building measures 53.3 metres by 15.2 metres, with an eave height of approximately 4 metres. The building's exterior is comprised of galvanized steel wall and roof panels which have a finish coat on both sides. The primary purpose of the electrical and mechanical systems within the building is to facilitate the waste water treatment process. Functional items, such as lighting, are minimal. With the exception of the pump room, the building is unheated. Ventilation is provided by louvres and roof mounted exhaust fans.

2.2 Operating Experience

The waste water equalization system is vital to the operation of the Holyrood TGS and is required to be in service year-round. The effluent contained in the basins can reach temperatures of up to 71°C and the vapours which are emitted create humid conditions within the building. The consistently high levels of humidity have resulted in several issues. For example, moisture generated in the form of condensation has contributed to the corrosion of the structural steel members (Figure 1) and spurred mold growth throughout the facility (Figure 2).

The basin recirculation and transfer pumps have reached the end of their service lives and require replacement. The pumps are inoperable and the associated piping network has become clogged with the sludge byproduct that results from the effluent treatment process, rendering the recirculation system ineffective. Servicing of the recirculation/transfer pumps and piping network is carried out by Hydro's internal resources. The recirculation piping was replaced in 1999 in an effort to prevent the reoccurrence of blockages. The replacement provided short-term relief and the piping became blocked again in 2004.

To enter the facility, employees must wear personal protective equipment, including respirators for protection from airborne mold particles, to manually add the caustic/acid chemical admixtures necessary for pH adjustment. However, as remediation and removing the mold would be costly and

would not provide a long-term solution due to the warm, moist air housed within the structure, Hydro has not attempted remediation and removal of the mold.

Limited basin access hinders the manual pH adjustment process resulting in longer retention times. High vapour concentrations throughout the facility create reduced visibility and slippery walking surfaces, which pose additional safety hazards.



Figure 1: Corrosion of Bolted Connection of Structural Members



Figure 2: Mold Growth in Waste Water Basin Building

The proposed completion of upgrades to the waste water equalization system was originally incorporated into Hydro's Capital Plan in 2014 but was deferred at that time due to the uncertainty surrounding the future operating state of the Holyrood TGS.

3.0 Justification

The waste water basin building has severely deteriorated and poses a safety concern for employees due to the mold growth within the facility and the corroded structural steel members. Attachment 2 provides a bio-aerosol assessment prepared by Rogers Enterprises in 2016 which addresses mold growth in the waste water storage building of the Holyrood TGS.

Operationally, the effluent recirculation/transfer system no longer functions as required to ensure treatment of the effluent. The proposed upgrades are required to eliminate the safety hazards associated with the building, enhance the effluent treatment system, and provide a long-term, cost-effective solution for wastewater management and processing.

4.0 Analysis

4.1 Identification of Alternatives

Hydro evaluated the following alternatives:

- Deferral;
- Replace the waste water basin building; and
- Replace the waste water basin building with a floating cover system.

4.2 Evaluation of Alternatives

4.2.1 Deferral

Over the past six years, the waste water equalization system has continued to deteriorate and further development of the Holyrood TGS operating plan has indicated that there will be a continued requirement for the system in post-steam operations. Upgrades to the waste water equalization system are necessary to eliminate safety hazards and ensure that the effluent is properly treated and disposed of in accordance with environmental requirements. Deferral of the waste water equalization system upgrades is no longer a viable alternative.

4.2.2 Replace the Waste Water Basin Building

Replacing the waste water basin building encompasses the replacement of the existing building and its associated effluent treatment infrastructure. The scope of work includes the demolition and removal of the existing metal building, ventilation system, and recirculation/transfer pumps and piping network. In this scenario, the existing concrete basins would remain and be refurbished with a new liner system. A new pre-engineered, metal building would be installed over the basins. The building would be furnished with an upgraded heating and ventilation system which would be sized to better address the high moisture levels within the facility, prevent the reoccurrence of mold and corrosion, and prevent freezing during winter during post-steam operations, when there will be no source of hot effluent to the basins. Despite the implementation of ventilation system upgrades, preliminary analysis has indicated that basin covers will likely be required to prevent effluent from freezing and reduce the infiltration rate of moisture within the building. Given the effluents high vapour emission rate, failure to incorporate a supplemental cover system will likely lead to a reoccurrence of the current mold and corrosion issues.

The supply and installation of new recirculation/transfer pumps will ensure that the effluent treatment process can be properly completed. To improve system operation and mitigate the issues experienced with sludge buildup within the pumps, valves, and piping network, a baffle system will be installed in the continuous basin. The baffle system will ensure that suspended solids are settled in a designated section of the basin. This will enable the recirculation process to occur away from the settled solids, ensuring that they are not agitated and pulled into the piping network.

4.2.3 Replace the Waste Water Basin Building with a Floating Cover System

In this alternative, a floating cover system will be installed over the basins in lieu of a new building. The elimination of a new building removes the requirement to upgrade the ventilation system and will reduce operating and maintenance costs associated with building maintenance. This alternative is unique in that it is adaptable to the operational requirements of the Holyrood TGS during its remaining life as a generation facility and during post-steam operations. Unlike the alternative to replace the building, in which the ventilation and heating system requirements will vary between operating scenarios, the floating cover system design is universal to both.

4.3 Recommended Alternative

Hydro completed a cost-benefit analysis to compare the cumulative net present value of replacing the waste water basin building and replacing the waste water basin building with a floating cover system.

The analysis was completed for a 25-year service life and considered the direct capital cost, operating and maintenance costs, and any asset benefits remaining at the end of the analysis period.

Replacing the waste water basin building with a floating cover system is the least-cost option and is recommended by Hydro to address the existing issues with the waste water equalization system.

The cost-benefit analysis is summarized in Table 1.

Table 1: Alternative Comparison

Alternatives	Cumulative Net Present Value (to the year 2019)	Difference in Cumulative Net Present Value and Least-Cost Alternative
Replace Waste Water Basin Building	$2,895,695	$392,135
Replace Waste Water Basin Building with Floating Cover System	$2,503,559	$0

5.0 Project Description

The proposed scope of work includes:

- Removal and disposal of the existing waste water basin building;
- Cleaning and re-lining the basins;
- Redesign and replacement of existing recirculation pumps, piping, and valves;
- Design, supply and installation of a baffle system in the continuous basin;
- Design, supply, and installation of a an engineered basin cover system;
- Supply and installation of safety railing around the perimeter of the basins;
- Supply and installation of guard railing to prevent vehicular traffic from inadvertently driving over the basin covers; and
- Supply and installation of exterior lighting around the basin perimeter.

The project estimate is shown in Table 2.

Table 2: Project Estimate ($000)

Project Cost	2021	2022	Beyond	Total
Material Supply	53.3	273.7	0.0	**327.0**
Labour	378.0	92.9	0.0	**470.9**
Consultant	53.0	0.0	0.0	**53.0**
Contract Work	1,084.5	58.3	0.0	**1,142.8**
Other Direct Costs	4.2	1.6	0.0	**5.8**
Interest and Escalation	83.2	78.5	0.0	**161.7**
Contingency	157.2	42.7	0.0	**199.9**
Total	**1,813.4**	**547.7**	**0.0**	**2,361.1**

The anticipated project schedule is shown in Table 3

Table 3: Project Schedule

Activity	Start Date	End Date
Planning:		
Develop scope statement and schedule, conduct risk review	January 2021	February 2021
Design:		
Complete detailed engineering design	February 2021	April 2021
Procurement:		
Material procurement, tender and award installation contracts	March 2021	March 2022
Construction:		
Complete site installation works	July 2021	March 2022
Commissioning:		
Final inspection and acceptance	March 2022	March 2022
Closeout:		
Interest cut off, as-build drawings, project closeout	April 2022	November 2022

6.0 Conclusion

The waste water equalization system is required for Holyrood TGS post-steam operations. To support the safe and reliable treatment of waste effluent generated at the Holyrood TGS site, Hydro recommends completing the proposed waste water equalization system upgrades in 2021–2022.

Attachment 1

Department of Municipal Affairs and Environment
Certificate of Approval

newfoundland labrador hydro
a nalcor energy company

Newfoundland Labrador

GOVERNMENT OF
NEWFOUNDLAND AND LABRADOR
Department of Municipal Affairs and Environment

CERTIFICATE OF APPROVAL

Pursuant to the Environmental Protection Act, SNL 2002 c E-14.2 Section 83

Issue Date: ***October 31, 2016*** Approval No. AA16-105640A

Amendment: ***April 2, 2018***

Expiration: ***August 31, 2021*** File No. 716.008, 716.050.1

Proponent:	**Newfoundland and Labrador Hydro** P.O. Box 29 Holyrood, NL A0A 2R0
Attention:	Rod Healey, Environment Department Manager
Re:	**Holyrood Thermal Generating Station, 123 MW Combustion Turbine and Six (6) Diesel Generating Units**

Approval is hereby given for the operation of a 123 MW Combustion Turbine, Six (6) Diesel Generating Units and a Thermal Generating Station, including power house, wastewater treatment plant, hazardous waste landfill and associated works located at Holyrood, NL.

This Certificate of Approval does not release the proponent from the obligation to obtain appropriate approvals from other concerned provincial, federal and municipal agencies. Nothing in this Certificate of Approval negates any regulatory requirement placed on the proponent. Where there is a conflict between conditions in this Certificate of Approval and a regulation, the requirements in the regulation shall take precedence. Approval from the Department of Environment and Climate Change shall be obtained prior to any significant change in the design, construction, installation, or operation of the facility, including any future expansion of the works. This Certificate of Approval shall not be sold, assigned, transferred, leased, mortgaged, sublet or otherwise alienated by the proponent without obtaining prior approval from the Minister.

This Certificate of Approval is subject to the terms and conditions as contained therein, as may be revised from time to time by the Department. Failure to comply with any of the terms and conditions may render this Certificate of Approval null and void, may require the proponent to cease all activities associated with this Certificate of Approval, may place the proponent and its agent(s) in violation of the *Environmental Protection Act*, and will make the proponent responsible for taking such remedial measures as may be prescribed by the Department. The Department reserves the right to add, delete or modify conditions to correct errors in the Certificate of Approval or to address significant environmental or health concerns.

Deth Potter

For **MINISTER**

TERMS AND CONDITIONS FOR APPROVAL No. AA16-105640A
April 2, 2018

General

1. This Certificate of Approval is for the operation of a 123 MW Combustion Turbine, Six (6) Diesel Generating Units and a Thermal Generating Station, including power house, wastewater treatment plant, hazardous waste landfill and associated works located at Holyrood, Newfoundland. Extensive future expansion or change of activities will require a separate Certificate of Approval.

2. Certificate of Approval AA16-105640 is revoked and replaced by this Certificate of Approval.

3. Any inquiries concerning this Approval shall be directed to the St. John's office of the Pollution Prevention Division (telephone: (709) 729-2556; or facsimile: (709) 729-6969).

4. In this Certificate of Approval:

- **accredited** means the formal recognition of the competence of a laboratory to carry out specific functions;
- **acutely lethal** means that the effluent at 100% concentration kills more than 50% of the rainbow trout subjected to it during a 96-hour period, when tested in accordance with the ALT;
- **administrative boundary** means the boundary surrounding the Thermal Generating Station outside of which the ambient air quality standards, outlined in Schedule A of the ***Air Pollution Control Regulations, 2004***, apply;
- **air contaminant** means any discharge, release, or other propagation into the air and includes, but is not limited to, dust, fumes, mist, smoke, particulate matter, vapours, gases, odours, odorous substances, acids, soot, grime or any combination of them;
- **ALT (acute lethality test)** means a test conducted as per Environment and Climate Change Canada's Environmental Protection Service reference method EPS/1/RM-13 Section 5 or 6;
- **BOD_5** means biochemical oxygen demand (5 day test);
- **CEMS** means the continuous emissions monitoring system used to measure gaseous releases of SO_2, NO_x, CO_2, CO and O_2 from each boiler;
- **CO** means carbon monoxide;
- **CO_2** means carbon dioxide;
- **Combustion Turbine (CT)** means the 123 MW combustion turbine;

- **Department** means the Department of Municipal Affairs and Environment and its successors;

- **Director** means the Director of the Pollution Prevention Division of the Department;

- **discharge criteria** means the maximum allowable levels for the parameters listed in Table 3;

- **EDMS** means Environmental Data Management System;

- **GAP** means *Storage and Handling of Gasoline and Associated Products Regulations, 2003;*

- **grab sample** means a quantity of undiluted sample collected at any given time;

- **hazardous waste** means a product, substance or organism that is intended for disposal or recycling, including storage prior to disposal or recycling, and that:
  (a) is listed in Schedule III of the *Export and Import of Hazardous Waste Regulations under the Canadian Environmental Protection Act, 1999*;
  (b) is included in any of Classes 2 to 6, and 8 and 9 of the *Transportation of Dangerous Goods Regulations* under the *Transportation of Dangerous Goods Act, 1992*; or
  (c) exhibits a hazard classification of a gas, a flammable liquid, an oxidizer, or a substance that is dangerously reactive, toxic, infectious, corrosive or environmentally hazardous;

- **HYDRO** means Newfoundland and Labrador Hydro;

- **Landfill Operations Manual** means the Hydro Procedure Manual for the Controlled Waste Landfill (most recent version);

- **licensed** means has a Certificate of Approval issued by the Minister to conduct an activity;

- **liquid waste** is defined by the *Slump Test* (Canadian Standards Association test method A23.2-5C for determining the slump of concrete). The liquid waste slump test involves placing the waste in a 30 cm open inverted cone. The cone is removed and the immediate decrease (slump) in height of the waste material is measured. If the material slumps such that the original height is reduced by 15 cm or more, the waste is considered liquid;

- **leachate holding pond** means the detention pond for leachate control prior to transfer to the on-site wastewater treatment plant;

- **malfunction** means any sudden, infrequent and not reasonably preventable failure of air pollution control equipment, wastewater treatment equipment, process equipment, or a process to operate in a normal or usual manner. Failures, caused in part by poor maintenance or careless operation, are not malfunctions;

- **Minister** means the Minister of the Department;
- **MW** means megawatt;
- **NO_x** means oxides of nitrogen;
- **NO_2** means nitrogen dioxide;
- **O_2** means oxygen;
- **PCBs** means polychlorinated biphenyls;
- **Plan** means the specific plan as identified in the section of this Approval within which it is used. For example, in the *Waste Management Plan* section it refers to the Waste Management Plan;
- **$PM_{2.5}$** means particulate matter with a diameter of 2.5µm or less;
- **PPMV** means parts per million by volume;
- **proficiency testing** means the use of inter-laboratory comparisons to determine the performance of individual laboratories for specific tests or measurements;
- **QA/QC** means Quality Assurance/Quality Control;
- **register(ed)**, in the context of storage tanks, means that information regarding the storage tank system has been submitted to a Service NL office and a registration number has been assigned to the storage tank system. In the context of dispersion modelling, registered means submitted to and approved by the Department in accordance with departmental policy and guidelines;
- **regulated substance** means a substance subject to discharge limit(s) under the *Environmental Control Water and Sewage Regulations, 2003*;
- **SO_2** means sulfur dioxide;
- **SOP** means Standard Operating Procedure;
- **spill or spillage** means a loss of gasoline or associated product in excess of 70 litres from a storage tank system, pipeline, tank vessel or vehicle, or an uncontrolled release of any volume of a regulated substance onto or into soil or a body of water;
- **stack** means a chimney, flue, conduit or duct arranged to conduct an air contaminant into the environment;
- **storage tank system** means a tank and all vent, fill and withdrawal piping associated with it installed in a fixed location and includes a temporary arrangement;
- **TDS** means total dissolved solids;
- **TPH** means total petroleum hydrocarbons, as measured by the Atlantic PIRI

method;

- **TSP** means total suspended particulate with diameter less than100µm. For the purpose of this Approval, TSP shall be measured using a high volume TSP sampler;

- **TSS** means total suspended solids;

- **used lubricating oil** means lubricating oil that as a result of its use, storage or handling, is altered so that it is no longer suitable for its intended purpose but is suitable for refining or other permitted uses;

- **used oil** means a used lubricating oil or waste oil;

- **waste oil** means an oil that as a result of contamination by any means or by its use, is altered so that it is no longer suitable for its intended purpose; and

- **wastewater treatment plant (WWTP)** means HYDRO's treatment plant for wastewater streams resulting from periodic cleaning of boiler fireside equipment, and includes the periodic basin, the batch reactor, filter press and all associated works.

5. All necessary measures shall be taken to ensure compliance with all applicable acts, regulations, policies and guidelines, including the following, or their successors:

- *Environmental Protection Act*;
- *Water Resources Act*;
- *Air Pollution Control Regulations, 2004;*
- *Environmental Control Water and Sewage Regulations, 2003;*
- *Halocarbon Regulations;*
- *Storage and Handling of Gasoline and Associated Products Regulations, 2003;*
- *Used Oil Control Regulations;*
- *Storage of PCB Waste Regulations, 2003;*
- *Ambient Air Monitoring Guidance Document;*
- *Sampling of Water and Wastewater - Industrial Effluent Applications Guidance Document;*
- *Accredited Laboratory Policy;*
- *Compliance Determination Guidance Document;*
- *Stack Emission Testing Guidance Document;*
- *Plume Dispersion Modelling Guidance Document;*
- *Guidance Document for the Management of Impacted Sites.*

This Approval provides terms and conditions to satisfy various requirements of the above listed acts, regulations, policies and guidelines. If it appears that any of the pertinent requirements of these acts, regulations, policies and guidelines are not being met, then a further review of the works shall be conducted, and suitable pollution control measures may be required by the Minister.

6. All reasonable efforts shall be taken to minimize the impact of the operation on the environment. Such efforts include:

- minimizing the area disturbed by the operation,
- minimizing air or water pollution,

- finding alternative uses, acceptable to the Director, for waste or rejected materials,
- removing equipment or structures when they no longer have further use, and
- considering the requirement for the eventual rehabilitation of disturbed areas when planning the development of any area on the facility property.

7. HYDRO shall provide to the Department, within a reasonable time, any information, records, reports or access to data requested or specified by the Department.

8. HYDRO shall keep all records or other documents required by this Approval at the Thermal Generating Facility location for a period of not less than three (3) years, beginning the day they were made. These records shall be made available for review by officials of the Department or Service NL when requested.

9. Should HYDRO wish to deviate in any way from the terms and conditions of this Certificate of Approval, a written request detailing the proposed deviation shall be made to the Minister. HYDRO shall comply with the most current terms and conditions until the Minister has authorized otherwise. In the case of meeting a deadline requirement, the request shall be made at least 60 days ahead of the applicable date as specified in this Approval or elsewhere by the Department.

Waste Management

10. All waste generated at the facility is subject to compliance with the ***Environmental Protection Act***. All non-industrial waste shall be stored in a manner acceptable to the Department and, on at least a weekly basis, be disposed of:

- at an authorized waste disposal site, with the permission of the owner/operator of the site; or
- by some other means acceptable to the Department.

If required, industrial waste shall be disposed of by a licensed operator.

11. HYDRO shall ensure that all volatile chemical and solvent wastes, if they cannot be reused, are placed in suitable covered containers for disposal in a manner acceptable to the Department. Disposal of liquid wastes at waste disposal sites in the province is not permitted.

12. Disposal of hazardous waste in a municipal or regional waste disposal site in this Province is prohibited. Transporters of hazardous waste shall have an approval issued by the Minister. Those generating hazardous waste shall have a waste generator's number issued by the Director and shall also complete the required information outlined in the Waste Manifest Form.

Waste Management Plan

13. HYDRO shall revise and submit the Waste Management Plan for their Combustion Turbine and Thermal Generating Station including the six (6) Diesel Generators by ***October 31, 2018***. Every year the Plan shall be reviewed and revised as necessary, accounting for expanding or alteration of activities. All proposed revisions shall be submitted to the Director for review. The Department will acknowledge receipt of the Plan and/or revisions, and shall provide any review comments within a

reasonable time frame.

Noise

14. HYDRO shall revise and submit the Noise Management Plan for their Combustion Turbine and Thermal Generating Station including the six (6) Diesel Generators by ***October 31, 2018***. Every year the Plan shall be reviewed and revised as necessary. All proposed revisions shall be submitted to the Director for review. The Department will acknowledge receipt of the Plan and/or revisions, and shall provide any review comments within a reasonable time frame.

Chemical Operations

15. All chemical loading and blending shall be performed in a controlled environment with an effort to minimise or eliminate the release of any fugitive emissions or odours.

Spill Prevention and Containment

16. Areas in which chemicals are used or stored shall have spill containment systems constructed with impermeable floors, walls, dykes or curbs as applicable and be configured, maintained, inspected and repaired as follows:

- they shall not discharge to the environment;
- they shall have an effective secondary containment capacity of at least 110% of the chemical storage tank capacity, in the case of a single storage container;
- if there is more than one storage container, the spill containment system shall be able to retain no less than 110% of the capacity of the largest container or 100 % of the capacity of the largest container plus 10% of the aggregate capacity of all additional containers, whichever is greater;
- they shall be kept clear of material that may compromise the containment capacity;
- they may include a floor drain system provided that the floor drains, and the place or device to which they drain, are configured in such a manner that the required effective secondary containment capacity is maintained;
- every year they shall be visually inspected for their liquid containing integrity, and repairs shall be made when required; and
- once every ten years, spill containment systems shall be inspected, by a means other than visual inspection, for their liquid containing integrity, and repairs shall be made when required.

Contingency Plan

17. HYDRO shall revise and submit the Contingency Plan for their Combustion Turbine and Thermal Generating Station including the six (6) Diesel Generators at Holyrood by ***October 31, 2018***. This Plan describes the actions to be taken in the event of a spill of a toxic or hazardous material. Copies of the Plan shall be placed in convenient areas throughout the facility so that employees can easily refer to it when needed. HYDRO shall ensure that all employees are aware of the Plan and understand the procedures and the reporting protocol to be followed in the event of

an emergency. An annual response exercise is recommended for response personnel. Every year, as a minimum, the Plan shall be reviewed and revised as necessary. Any proposed significant revisions shall be submitted to the Director for review. Changes which are not considered significant include minor variations in equipment or personnel characteristics which do not affect implementation of the Plan.

18. Every time HYDRO implements the Contingency Plan, information shall be recorded for future reference. This will assist in reviewing and updating the Plan. The record is to consist of all incidents with environmental implications, and include such details as:

- date;
- time of day;
- type of incident (i.e. liquid spill, gas leak, granular chemical spill, equipment malfunction, etc.);
- actions taken;
- problems encountered; and
- other relevant information that would aid in later review of the Plan performance.

Each incident report shall be submitted to the Department as per the ***Reporting*** section.

Site Decommissioning and Restoration

19. A preliminary Decommissioning Plan, entitled "*Decommissioning and Demolition of the Holyrood Thermal Generating Station, dated July 29, 2016*" has been submitted to the Department on February 23, 2018.

20. A detailed Decommissioning Plan that includes measures to restore areas disturbed by the operation shall be submitted to the Director for review at least six (6) months prior to the cessation of operations at the Thermal Generating Station's power house. For guidance on the preparation of the Decommissioning Plans, refer to Appendix A.

21. As part of the site decommissioning and restoration process, HYDRO shall employ a registered Site Professional to complete a site-wide environmental site assessment, as defined in the ***Guidance Document for the Management of Impacted Sites***. Should impacts be identified, HYDRO shall proceed through the process outlined in the ***Guidance Document for the Management of Impacted Sites*** to achieve regulatory site closure.

Fuel Usage, Fuel Storage & Offloading

22. HYDRO is permitted to accept and combust in its Combustion Turbine ultra-low sulfur diesel oil.

23. HYDRO shall not combust Heavy Fuel Oil with sulfur content greater than **0.7%** by weight in the Thermal Generating Station.

24. HYDRO is permitted to accept and burn alternative fuel only with the written approval of the Department.

25. The diesel fuel offloading, storage and handling area for the new CT shall have an impermeable surface with an oil containment or collection system routed towards an oil/water-separator. Care shall be taken to prevent spillage on the ground and to the surrounding environment, particularly streams and other water bodies.

26. HYDRO shall maintain, and submit to the Director on a monthly basis as per the ***Reporting*** section, the following information:

- Name of Supplier, date and volume of each shipment of ultra-low sulfur diesel oil received; and
- Hourly diesel oil usage of new CT in litres per hour.

27. HYDRO shall analyze each delivery of Heavy Fuel Oil for the parameters listed in Table 1. Analysis shall be on a representative sample of the Heavy Fuel Oil received.

Table 1 – Heavy Fuel Oil Analysis Program

Parameters			**Frequency**
A.P.I Gravity @60 ºF Pour Point Sulfur% by Weight Sediment % by Weight Aluminum Sodium	Density (kg/m^3 @ 15 ºC) Viscosity cSt @ 50 ºC BTU's per US Gallon Water % by Volume Nickel Vanadium	Flash Point Ash % by Weight Asphaltenes % by Weight Silicon	**Every Batch Delivered**

28. HYDRO shall maintain, and submit to the Director as per ***Reporting*** section, a record of all Heavy Fuel Oil received. The record shall include:

- name of the supplier;
- date and volume of the Heavy Fuel Oil offloaded;
- the certificate of analysis for each batch of Heavy Fuel Oil delivery received; and
- the name of the laboratory where analysis was performed.

Combustion Turbine Operations

29. HYDRO shall maintain, and submit to the Director on a monthly basis as per the ***Reporting*** section, the following information:

- date and hours of operation of the Combustion Turbine;
- date and time of start-up and shutdown of the Combustion Turbine;
- specification of all maintenance performed on the Combustion Turbine and/or associated water injection system, including the date and time the work commenced and completed; and
- total litres of water flow per hour for each hour of the day when the Combustion Turbine is in operation.

30. The Combustion Turbine facility shall have an impermeable surface with an oil containment or collection system routed to an oil/water separator.

31. All floor drains from the main building of the Combustion Turbine shall be directed to the oil/water separator prior to release into the Indian Pond.

32. HYDRO shall operate the Combustion Turbine water treatment plant as per manufacturer standards.

Diesel Generators

33. HYDRO shall operate no more than any five (5) of the six (6) diesel generators at **87% load** from **6:00 AM** to **10:00 AM** and from **4:00 PM** to **8:00 PM** to generate up to **8 MW** of power from ***November 1*** to ***April 30*** for peaking purposes.

34. HYDRO shall operate no more than any five (5) of the six (6) diesel generators at **67% load**, 24 hours a day, 365 days a year to generate up to **6 MW** of power for emergency purposes.

35. HYDRO shall complete the required stack modifications on all six diesel generators [as described in their revised (February 28, 2018) project schedule-70154TB, dated September 27, 2017] by ***June 30, 2018***.

Storage Tanks

36. All on site storage of petroleum shall comply with the ***Storage and Handling of Gasoline and Associated Products Regulations, 2003***, or its successor. Storage tank systems shall be registered with Service NL. All aboveground storage tanks shall be clearly and visibly labelled with their GAP registration numbers.

37. HYDRO shall implement the API-653, "*Tank Inspection, Repair, Alteration and Reconstruction*" in accordance with common industry practice.

38. An inventory of all petroleum storage tanks shall be submitted to the Director for review by ***June 30, 2018***. This inventory shall include the following:

- site plan showing tank location,
- registration number (where applicable),
- identification number,
- material stored,
- capacity,
- annual throughput,
- tank material,
- tank type,
- tank diameter,
- tank height,
- tank colour,
- roof type,
- year of manufacture,
- date of installation,
- date of last inspection,

- failure history,
- maintenance history,
- secondary containment capacity, and
- date of next planned inspection.

Every two (2) years, an update of any changes to the inventory shall be submitted to the Director.

Used Oil

39. Used oil shall be retained in an approved tank or closed container, and disposed of by a company licensed for handling and disposal of used oil products.

40. HYDRO shall submit a revised SOP for the handling and storage of used oil to the Director by ***December 31, 2018***. The SOP shall include as a minimum, detail procedures for the storage, handling and recording of the volumes and quality of used oil.

Wastewater Flows and Treatment

41. The Thermal Generating Station's once-through cooling water shall be obtained from Indian Pond, and shall be discharged directly to Conception Bay.

42. The Thermal Generating Station's south-east floor drains shall be routed through an oil/water separator (OS-1) and then to Indian Pond through the storm water collection system.

43. The Thermal Generating Station's south-west floor drains shall be routed through a grease trap and an oil/water separator (OS-2) and then to the cooling water discharge piping associated with Unit No. 1 & 2.

44. The Thermal Generating Station's north-east and north-west floor drains shall be routed through a grease trap and oil/water separator (north-east OS-4 & north-west OS-3) and then to a 900 m^3 equalization basin (Continuous Basin).

45. All wastewater generated from backwashing in the Combustion Turbine water treatment plant from the backwashing shall be routed to the Combustion Turbine oil/water separator (CT-OS) prior to discharge into Indian Pond.

46. All oil/water separators shall be checked routinely to ensure they are working properly. A log of these checks shall be maintained.

47. Wastewater streams resulting from the Thermal Generating Station's daily operations, including raw water clarification, filter backwashes, boiler blowdown and other similar activities shall be directed to the Continuous Basin. Any flow or drainage from the Continuous Basin shall be routed to the new oil/water separator (OS-5) before discharging into Indian Pond.

48. Demineralizer regeneration wastewater flows may be directed to the seal pit associated with Units No. 1 & 2, during such times at least one cooling water pump shall be active.

49. Wastewater streams resulting from periodic events where water is used to clean the Thermal Generating Station's boiler fireside equipment, including air pre-heater wash flows, fireside boiler wash flows and boiler acid wash flows, shall be directed to a 900 m^3 equalization basin (Periodic Basin). Any flow or drainage from the Periodic Basin shall be directed to the wastewater treatment plant.

50. Any flow or drainage from the wastewater treatment plant shall be discharged to the cooling water intakes for Units No. 1 & 2 or Unit 3.

51. Effluent from the dewatering of filter cake shall be re-cycled through the wastewater treatment plant.

52. All solid waste generated from the Combustion Turbine water treatment plant and the Thermal Generating Station wastewater treatment plant operations shall be directed to the hazardous waste landfill.

Effluent Monitoring and Discharge

53. HYDRO shall perform an Effluent Monitoring Program as per Table 2. All results shall be submitted to the Director as per the ***Reporting*** section.

Table 2: Effluent Monitoring Program

Location	EDMS Location Code	Parameters	Frequency
WWTP	00068	Aluminum Iron Magnesium Nickel Vanadium pH TSS	Grab sample prior to each batch release †
		ALT	Grab sample from each batch following new addition of wastewater to the periodic basin
Continuous Basin Outfall	00069	Iron Nickel Vanadium pH TSS TPH	Weekly Grab
		ALT	Monthly Grab
OS-1	00070	Iron Nickel Vanadium pH TSS TPH	Weekly Grab
OS-2	00071	Iron Nickel Vanadium pH TSS TPH	Weekly Grab
CT-OS (Prior to discharge into Indian Pond)	00072	TPH TDS TSS BOD pH	Weekly (Whenever there is discharge)

† Grab samples for all parameters shall be taken from the batch reactor at the same time.

54. If effluent from wastewater treatment plant fails the ALT, HYDRO shall collect a grab sample from the next batch of effluent from the wastewater treatment plant and conduct an ALT, even if there has been no addition to the Periodic Basin.

55. HYDRO shall record on a continuous basis the volume of influent to the Periodic Basin. The results shall be submitted to the Director as per the ***Reporting*** section.

56. Refer to Table 3 for the discharge criteria.

Table 3 - Effluent Discharge Criteria

Parameter	Allowable Limits *
Arsenic	0.50
Barium	5.00
Boron	5.00
BOD	20.00
Cadmium	0.05
Chromium	1.00
Copper	0.30
Iron	10.00
Lead	0.20
Mercury	0.005
Nitrates	10.00
Nitrogen (ammoniacal)	2.00
Nickel	0.50
Phenol	0.10
Phosphates (total as P2O5)	1.00
pH	5.5 – 9.0 pH units
Selenium	0.01
Silver	0.05
TDS	1000.00
TSS	30.00
TPH	15.00
Vanadium	0.50
Zinc	0.50
***** Units are in mg/L unless otherwise specified	

57. If effluent is determined to be acutely lethal for three consecutive ALTs, HYDRO shall implement a toxicity identification evaluation to identify the toxin, and from this develop measures to prevent or reduce the toxin. The report, written as a result of these identification activities, shall be submitted to the Director for review, ***within 60 days*** of the third consecutive failed ALT result. After review of the report, the Director may place additional requirements upon the proponent for treatment of effluent prior to discharge.

Water Chemistry Analysis

58. HYDRO shall perform a Water Chemistry Analysis Program for the Thermal Generating Station four times per calendar year and not less than thirty (30) days

apart, as per Table 4. All results shall be submitted to the Director as per the ***Reporting*** section.

59. HYDRO shall perform a Water Chemistry Analysis Program for the Combustion Turbine on a monthly basis, whenever the Combustion Turbine water treatment plant and/or Combustion Turbine is in operation, as per Table 4. All results shall be submitted to the Director as per the ***Reporting*** section.

Table 4 - Water Chemistry Analysis Program

Location	EDMS Location Code	Parameters
Cooling Water Intake at Indian Pond (Grab Sample)	00073	**General Parameters –** must include the following: nitrate + nitrite, nitrate, nitrite, pH, TSS, DOC, conductance, colour, TDS (calculated), orthophosphate, potassium, carbonate ($CaCO_3$), hardness ($CaCO_3$), bicarbonate ($CaCO_3$), magnesium, sodium, phenolics, sulfate, calcium, sulphide, reactive silica, alkalinity, ammonia, phosphorous, chloride, turbidity
Cooling Water Outfall Stream, Prior to Release into Conception Bay (Grab Sample)	00074	
Continuous Basin Outfall Stream, Prior to Release into Indian Pond (Grab Sample)	00069	**Metals Scan** - must include the following: Aluminium, antimony, arsenic, barium, beryllium, bismuth, boron, cadmium, chromium, cobalt, copper, iron, lead, manganese, molybdenum, mercury, nickel, selenium, silver, strontium, thallium, tin, titanium, uranium, vanadium, zinc
CT Effluent Prior to Discharge into Indian Pond	00072	

60. HYDRO shall inform the Department of the date and duration of any usage of the **Copper Ion Injection** in their system, as per ***Reporting Section***.

Environmental Effects Monitoring

61. HYDRO shall continue to conduct an Environmental Effects Monitoring study to monitor the impacts of the discharge of cooling water, the continuous basin's water and the wastewater treatment plant treated water on Conception Bay. The study design shall be submitted to the Director for review by ***September 30, 2017.*** The results of the completed study shall be submitted to the Director for review by ***June 30, 2020.***

Hazardous Waste Landfill Operations

62. HYDRO shall operate the hazardous waste landfill in the manner as described in the ***Landfill Operations Manual.*** Any revision or changes to the ***Landfill Operations Manual*** shall be submitted to the Director for review and approval prior to such revision or changes being made.

63. Only waste identified in the ***Landfill Operations Manual*** shall be placed in the hazardous waste landfill. These include: bottom and fly ash, periodic basin sludge, continuous basin sludge, wastewater treatment plant filter-cake, filter sand, raw-water treatment ion exchange resins, and clean-up from chemical spills.

64. Liquid waste shall not be disposed of in the hazardous waste landfill, unless otherwise authorized in writing by the Department.

65. The Department reserves the right to require some form of pre-treatment of waste before placement in the site.

66. HYDRO shall periodically review opportunities for reuse and/or recycling of the waste types disposed of in the landfill.

67. HYDRO shall maintain a landfill security fence with a sign affixed to the fence identifying the site as a hazardous waste containment system. This sign shall identify the owner of the landfill and a contact phone number. The sign and its placement shall be acceptable to the Department.

68. No activities shall occur within the fenced area of the landfill, except for the deposition of waste; extraction of leachate; or other maintenance requirements of the landfill cap or the landfill.

69. HYDRO shall conduct an annual inspection program as per the ***Landfill Operations Manual.***

70. Leachate accumulated in each of the hazardous waste landfill collection systems, including the leachate holding pond, shall be removed as required so that leachate does not overflow the collection system.

71. Any flow or drainage from the leachate holding pond shall be directed to the Periodic Basin. Leachate shall not be discharged directly to the environment without prior authorization by the Department.

Hazardous Waste Landfill Monitoring

72. HYDRO shall perform an Environmental Monitoring Program as depicted in the ***Landfill Operations Manual,*** including monitoring of: groundwater quality and levels, surface water quality, leachate leakage, liner integrity and physical movement of the landfill.

73. HYDRO shall perform a Groundwater Monitoring Program as per Table 5. This monitoring program shall be performed throughout the operational life of the landfill, and during the twenty five (25) years following closure.

Table 5: Groundwater Monitoring Program					
Location	**EDMS Location Code**	**Parameters**			**Frequency**
Monitoring Wells:					
BH-1	00075				
BH-2	00076	Aluminum	Iron	Magnesium	**Every Four Months**
BH-3	00077	Nickel	Vanadium		
BH-4	00078				
BH-5	00079				
BH-6	00080				
BH-7	00081				
Monitoring Wells:		Antimony	Arsenic	Barium	
		Beryllium	Bismuth	Cadmium	
BH-1	00075	Cobalt	Calcium	pH	
BH-2	00076	Chromium	Copper	Lead	**Annually**
BH-3	00077	Manganese	Mercury	Molybdenum	
BH-4	00078	Phosphorus	Potassium	Selenium	
BH-5	00079	Silver	Sodium	Zinc	
BH-6	00080	VOC's	TDS		
BH-7	00081				

74. HYDRO shall perform a Surface Water Monitoring Program as per Table 6. This monitoring program shall be performed throughout the operational life of the landfill, and during the twenty five (25) years following closure.

Table 6: Surface Water Monitoring Program				
Location	**EDMS Location Code**	**Parameters**		**Frequency**
Surface Well 1	00082	VOCs		**Annually**
Surface Well 2	00083			**Monthly (provided water is flowing in the ditches during the month)**
Surface Well 3	00084	Cadmium	Chromium (total)	
Surface Well 4	00085	Iron	Lead	
		Mercury	Nickel	
Surface Well 5	00086	Vanadium	pH	
Surface Well 6	00087	TDS	TSS	
.				

75. The total monthly flow:

- from the primary and secondary leachate collection systems;
- from the leachate holding pond to the Periodic Basin; and

- through the primary cell and holding pond leak detection manholes;

shall be accurately measured and recorded. This record and all results from the Groundwater and Surface Water Monitoring Programs shall be submitted to the Director as per the ***Reporting*** section.

76. HYDRO shall submit an annual Landfill Operating Report to the Director by ***February 28*** of the subsequent year. This report shall include:

- results of the Environmental Monitoring Program; and
- summaries of all materials placed in the landfill site including: waste characterization reports, volumes of waste deposited in the landfill, source(s) of the waste, identification of contaminants of concern, and copies of the hazardous waste manifest forms.

Ambient Air

77. HYDRO shall operate an ambient air monitoring program as per the conditions in this Approval and its amendments. Approval shall be obtained from the Director prior to purchase or installation of any monitoring equipment.

78. Site locations and parameters to be monitored are outlined in Table 7.

Table 7 - Ambient Air Monitoring Program

Monitoring Sites	Parameter
Butter Pot	$PM_{2.5}$, SO_2, NO_x, NO_2
Green Acres	TSP, $PM_{2.5}$, SO_2, NO_x, NO_2
Indian Pond	TSP, $PM_{2.5}$, SO_2, NO_x, NO_2
Lawrence Pond	TSP, $PM_{2.5}$, SO_2, NO_x, NO_2
Lower Indian Pond Drive	TSP, $PM_{2.5}$, SO_2, NO_x, NO_2
Main Gate	TSP, $PM_{2.5}$

79. HYDRO shall label, date and store all the TSP filters from the monitoring sites in a secure place for the period of three (3) month.

80. Ambient air monitoring shall be done in accordance with the ***Ambient Air Monitoring Guidance Document (GD-PPD-065)***, or its successors.

81. Frequency of non-continuous TSP sampling shall coincide with the 6-day National Air Pollution Surveillance (NAPS) schedule. Sampling results shall be submitted as per the ***Reporting*** section.

82. Non-continuous TSP shall be determined by the United States EPA Test Method: "Reference Method for the Determination of Suspended Particulate Matter in the Atmosphere (High-Volume Method), or alternate method approved by the Director.

83. HYDRO shall operate, calibrate and maintain a meteorological station at **Green Acres** site in accordance with the guidelines specified in the United States EPA document "Quality Assurance Handbook for Air Pollution Measurement Systems -

Volume IV: Meteorological Measurements Version 2.0 (Final)," EPA- 454/B-08-002, or its successors. Parameters to be measured and recorded shall include as a minimum: wind speed, wind direction, ambient air temperature, relative humidity, barometric pressure and precipitation. All records shall be made available to the Department upon request.

84. Information regarding calibrations, site visits and maintenance for all continuous ambient air monitors shall be recorded into the DR DAS electronic logbook. Specific information regarding non-continuous TSP monitors, including but not limited to slopes, intercepts, initial and final masses, times, flows, etc. shall be submitted electronically, as per the ***Reporting*** section.

Continuous Opacity Monitoring System

85. Opacity of emissions from each boiler at the Thermal Generating Station shall be continuously measured and recorded using a Continuous Opacity Monitoring System (COMS) that meets all the requirements of *Performance Specification 1 (PS-1) - Specifications and Test Procedures for Opacity Continuous Emission Monitoring Systems in Stationary Sources,* of the United States *Code of Federal Regulations - 40 CFR Part 60, Appendix B.* Minimum QA/QC requirements are specified to assess the quality of COMS performance. Daily zero and span checks, quarterly performance audits, and annual zero alignment checks are required to assure the proper functioning of the COMS and the accuracy of the COMS data. These shall be recorded in a written log and a copy made available on request.

86. The United States EPA Federal Register Test Method 203 - Determination of the Opacity of Emissions from Stationary Sources by Continuous Opacity Monitoring Systems shall be used to determine compliance with the opacity standards in the ***Air Pollution Control Regulations, 2004.***

87. Monthly opacity data reports, in digital format, shall be submitted in the form of six minute arithmetic averages of instantaneous readings, as per the ***Reporting*** section. Each six minute average data point shall be identified by date, time and average percent opacity.

Continuous Emissions Monitoring System

88. Emissions from each boiler at the Thermal Generating Station shall be measured and recorded using an automated CEMS that meets the requirements of Environment Canada's *Protocols and Performance Specifications for Continuous Monitoring of Gaseous Emissions from Thermal Power Generation (EPS 1/PG/7)*, or its successor. Notwithstanding this, application of specific requirements of EPS 1/PG/7 to the CEMS may be modified subject to approval by the Director.

89. Monthly CEMS data reports containing one-hour arithmetic averages of emission rates of SO_2, NO_x, CO_2, CO and O_2 (all expressed in ppmv) shall be submitted in digital format, as per the ***Reporting*** section.

Pollution Control Equipment

90. All pollution control equipment shall be maintained and operated as per manufacturer's specifications for best performance.

91. HYDRO shall not operate the Combustion Turbine unless the NOx control system associated with the Combustion Turbine is in full operation.

Administrative boundary

92. The ambient air quality standards specified in Schedule A of the ***Air Pollution Control Regulations, 2004*** shall apply to all points outside of HYDRO's administrative boundary. The administrative boundary is defined as the area encompassed by the coordinates contained in Appendix B, a total area of approximately **0.2687 km^2**. All coordinates are referenced to NAD83 UTM Zone 22.

Stack Emissions Testing and Dispersion Modelling

93. Stack emissions testing shall be done in accordance with the ***Stack Emission Testing Guidance Document (GD-PPD-016.1)***. Dispersion modelling shall be done in accordance with the ***Plume Dispersion Modelling Guidance Document (GD-PPD-019.2)***. Determination of frequency of stack emissions testing and dispersion modelling shall be done in accordance with the ***Compliance Determination Guidance Document (GD-PPD-009.4)***.

94. HYDRO shall be required to complete the next stack emissions testing once every four years if it has been shown, via a registered dispersion model, that the operation is in compliance with section 3(2) and Schedule A of the ***Air Pollution Control Regulations, 2004***. If it has been shown, via a registered dispersion model, that the operation is not in compliance with section 3(2) and Schedule A of the ***Air Pollution Control Regulations, 2004***, then the facility shall complete stack emissions testing every two years.

95. Plume dispersion modelling results shall be submitted to the Department within ***120 days*** of completion of the stack emissions testing.

Annual Air Emissions Reporting

96. HYDRO shall submit an annual Air Emission Report to the Director by ***February 28*** of the subsequent year. This report shall include:

- total fuel consumption;
- the weighted average sulfur content of the fuel;
- the fuel specific gravity;
- the estimated, or, if available, the monitored annual emissions of the following flue gas constituents: SO_2, NO_x, NO_2, CO and particulate; and
- the actual calculations including factors, formulae and/or assumptions used.

Analysis and QA/QC

97. Unless otherwise stated herein, all solids and liquids analysis performed pursuant to this Approval shall be done by either a contracted commercial laboratory or an in-house laboratory. Contracted commercial laboratories shall have a recognized form of accreditation. In-house laboratories have the option of either obtaining accreditation or submitting to an annual inspection by a representative of the Department, for which HYDRO shall be billed for each laboratory inspection in accordance with Schedule 1 of the ***Accredited Laboratory Policy (PD:PP2001-01.02)***. Recommendations of the Director stemming from the annual inspections shall be addressed within 6 months, otherwise further analytical results shall not be accepted by the Director.

98. If HYDRO wishes to perform in-house laboratory testing and submit to an annual inspection by the Department then a recognized form of proficiency testing recognition shall be obtained for compliance parameters for which this recognition exists. The compliance parameters are listed in the ***Effluent and Monitoring*** section. If using a commercial laboratory, HYDRO shall contact that commercial laboratory to determine and to implement the sampling and transportation QA/QC requirements for those activities.

99. The exact location of each sampling point shall remain consistent over the life of the monitoring programs, unless otherwise approved by the Director. A sketch or diagram clearly identifying each sampling location shall be submitted by ***March 31, 2017*** to the Department.

100. HYDRO shall bear all expenses incurred in carrying out the environmental monitoring and analysis required under conditions of this Approval.

Monitoring Alteration

101. The Director has the authority to alter monitoring programs or require additional testing at any time when:

- pollutants might be released to the surrounding environment without being detected;
- an adverse environmental effect may occur; or
- it is no longer necessary to maintain the current frequency of sampling and/or the monitoring of parameters.

102. HYDRO may, at any time, request that monitoring programs or requirements of this Approval be altered by:

- requesting the change in writing to the Director; and
- providing sufficient justification, as determined by the Director.

The requirements of this Approval shall remain in effect until altered, in writing, by the Director.

Reporting

103. Monthly reports containing the environmental compliance monitoring and sampling

information required in this Approval shall be received by the Director in digital format within 30 calendar days of the reporting month. All related laboratory reports shall be submitted with the monthly report in XML format and Adobe Portable Document Format (PDF). Digital report submissions shall be uploaded through the EDMS web portal. The Pollution Prevention Division shall provide details of the portal web address and submission requirements.

104. Each monthly report shall include a summary of all environmental monitoring components and shall include an explanation for the omission of any requisite data. The monthly summary reports shall be in Microsoft Word or Adobe PDF and shall be uploaded through the EDMS web portal with the data submissions

105. All incidents of:

- *Contingency Plan* implementation; or
- non-conformance of any condition within this Approval; or
- spillage or leakage of a regulated substance; or
- discharge criteria being, or suspected of being, exceeded; or
- verbal/written complaints of an environmental nature from the public received by HYDRO related to the Thermal Generating Station, whether or not they are received anonymously;

shall be immediately reported, within one working day, to Department.

A written report including a detailed description of the incident, summary of contributing factors, and an Action Plan to prevent future incidents of a similar nature, shall be submitted to the Department. The Action Plan shall include a description of actions already taken and future actions to be implemented, and shall be submitted within thirty days of the date of the initial incident.

106. Any spillage or leakage of gasoline or associated product shall be reported immediately through the Canadian Coast Guard at 1-(709)-772-2083.

Liaison Committee

107. The Department recognizes the benefits, and at times the necessity, of accurate, unbiased communication between the public and industrial operations, which have an impact on the properties and residents in the area. The Department encourages the formation and regular meeting of a Liaison Committee comprised of representatives of HYDRO, the Department and independent members of the general population of Holyrood and Conception Bay South. Regular meetings of the Liaison Committee will provide a clear conduit of communication between concerned citizens and HYDRO.

Expiration

108. This Certificate of Approval expires ***August 31, 2021.***

109. Should HYDRO wish to continue to operate the Thermal Generating Station and the Combustion Turbine beyond this expiry date, a written request shall be submitted to the Director for the renewal of this Approval. Such request shall be made prior to ***March 1, 2021.***

APPENDIX A

Industrial Site Decommissioning and Restoration Plan Guidelines

As part of the Department of Environment and Climate Change's ongoing commitment to minimize the residual impact of industrial activities on the environment of the province, the Department requires that HYDRO shall develop a Decommissioning and Restoration Plan for the Thermal Generating Station at Holyrood, NL and its associated property. The guidelines listed below are intended to provide some general guidance as to the expectations of the Department with regard to the development of the Plan, and to identify areas that are of particular concern or interest. The points presented are for consideration, and are open to interpretation and discussion.

Decommissioning and Restoration Plans are intended to present the scope of activities that a company shall undertake at the time of final closure and/or decommissioning of the industrial properties. Where it is useful and practical to do so the company is encouraged to begin undertaking some of the activities outlined in the Plan prior to final closure and decommissioning. The objectives of the restoration work to be undertaken can be summarized as follows:

- to ensure that abandoned industrial facilities do not endanger public health or safety;
- to prevent progressive degradation and to enhance the natural recovery of areas affected by industrial activities;
- to ensure that industrial facilities and associated wastes are abandoned in a manner that will minimize the requirement for long term maintenance and monitoring;
- to mitigate, and if possible prevent, the continued loadings of contaminants and wastes to the environment. The primary objective shall be to prevent the release of contaminants into the environment. Where prevention is not practical due to technical or economic limitations then activities intended to mitigate the consequence of such a release of contaminants shall become the objective of restoration work;
- to return affected areas to a state compatible with the original undisturbed condition, giving due consideration to practical factors including economics, aesthetics, future productivity and future use; and
- to plan new facilities so as to facilitate eventual rehabilitation.

The Decommissioning and Restoration Plan should:

- identify areas of known historical or current contamination;
- identify past or existing operational procedures and waste management practices that have, or may have, resulted in site contamination;
- highlight the issues or components to be addressed;
- identify operational procedures and waste management practices that can prevent or reduce site contamination;
- consider future land use, regulatory concerns and public concerns;
- enable estimation of the resources and time frame required to decommission the facility and restore the site to a condition acceptable to the Department;
- enable financial planning to ensure the necessary funds for decommissioning and restoration are set aside during the operational life of the facility, and;
- include arrangements for appropriate project management to ensure successful completion of the decommissioning and restoration program.

APPENDIX B

HYDRO Administrative Boundary Coordinates

341903.0	5257750.4
341925.9	5257759.4
341972.8	5257727.0
341962.6	5257711.0
342036.6	5257660.9
342232.8	5257494.1
342162.6	5257271.8
342095.8	5257245.3
341947.8	5257207.3
341949.6	5257201.9
341957.0	5257196.4
341949.3	5257185.4
341926.5	5257202.1
341918.4	5257200.3
341700.2	5257177.4
341694.0	5257177.7
341659.1	5257166.3
341593.5	5257072.8
341563.4	5257088.4
341513.5	5257117.4
341528.6	5257149.4
341509.6	5257158.7
341544.1	5257250.4
341563.9	5257298.8
341571.2	5257314.4
341584.6	5257339.8
341612.8	5257383.6
341662.4	5257454.4
341685.8	5257484.8
341704.4	5257507.1
341748.2	5257599.8
341750.0	5257614.9
341756.9	5257644.8
341770.7	5257678.4
341789.5	5257710.2
341844.4	5257789.4
341903.0	5257750.4

Cc: Mr. Neil Codner
Environment and Climate Change Canada
6 Bruce Street
Mount Pearl, NL
A1N 4T3

Mr. Robert Locke
Manager of Operations and Environmental Protection
Service NL
5 Mews Place
P.O. Box 8700
St. John's, NL
A1B 4J6

Chief Administrative Officer
Town of Holyrood
P.O. Box 100
Holyrood, NL
A1B 4J6

Chief Administrative Officer
Town of Conception Bay South
P.O. Box 280
CBS, NL
A1W 1M8

Attachment 2

Bio-aerosol Assessment Waste Water Storage Building

newfoundland labrador hydro
a nalcor energy company

REL
Rogers Enterprises Ltd.

Health & Safety
Consultants and Trainers

Bio-aerosol Assessment
Waste Water Storage Building

Newfoundland and Labrador Hydro
Holyrood, NL

September 7, 2016

Submitted to: Wade Kelloway
Submitted on: October 3, 2016

Tel: (709)753-8002 *10 Maverick Place, Paradise, NL, Canada A1L 0J1* *Fax: (709)753-8004*
www.safetyexperts.ca

FORM 5005
REV 100120

Table of Contents

EXECUTIVE SUMMARY 2

1.0 INTRODUCTION 4

2.0 BACKGROUND INFORMATION 4

3.0 PURPOSE OF ASSESSMENT 4

4.0 SCOPE OF ASSESSMENT AND SAMPLING METHODOLOGY 5

5.0 APPLICABLE GUIDELINES / LEGISLATION 6

6.0 BIO-AEROSOLS AND POTENTIAL HEALTH CONCERNS 7

7.0 ASSESSMENT FINDINGS AND DISCUSSION 9

8.0 RECOMMENDATIONS 11

9.0 CONCLUSION 12

APPENDIX A: LABORATORY ANALYTICAL REPORT 13

SOURCE REFERENCES 17

EXECUTIVE SUMMARY

Rogers Enterprises Ltd. (REL) was requested by Wade Kelloway, Safety Coordinator, Newfoundland and Labrador Hydro, to conduct a bio-aerosol assessment in the waste water storage building at the Thermal Generating Station, Holyrood, Newfoundland. The assessment included collecting both viable bio- aerosol samples and bio tape-lift samples.

The assessment was conducted to confirm or refute the presence of mold and to determine whether the airborne concentrations of bio-aerosols were within the guidelines as cited in the Federal-Provincial Committee on "Environmental and Occupational Health, Fungal Contamination in Public Buildings" and the Canadian guidelines in "Indoor Air Quality in Office Buildings." The assessment was conducted by REL on September 7, 2016.

The bio-aerosol assessment involved collecting a total of five (5) viable bio-aerosol samples and seven (7) bio-tape lift samples in the waste water storage building. The waste water storage building is divided into three (3) sections: periodic basin, continuous basin and the vestibule. Two (2) bio-aerosol samples and three (3) bio-tape lift samples were collected in both the periodic and the continuous basins and one (1) bio-aerosol sample and one (1) bio-tape lift sample was collected on the vestibule. One (1) additional bio-aerosol sample was collected outdoors for comparison purposes.

The samples were sent to EMC Scientific Inc., Mississauga, Ontario, for laboratory analysis.

According to the laboratory analytical report (reference **Appendix A**), all five (5) viable bio-aerosol samples collected within the building contained bio-aerosol growth, with sample results ranging from 150 CFU/m^3 (colony forming units per cubic metre of air) to 250 CFU/m^3. In comparison, the air sample collected outdoors contained an airborne spore count of 381 CFU/m^3.

According to Health Canada guidelines, up to 150 CFU/m^3 is acceptable in indoor environments if there is a mixture of species reflective of the outdoor air spores. All five samples collected inside the building exceeded the Health Canada guideline, with spore counts ranging from 150 CFU/m^3 to 250 CFU/m^3.

The laboratory analysis also identified elevated levels of *Penicillium,* a Class B toxigenic mold species, on the five (5) viable bio-aerosol samples collected inside the building. Class B hazards, such as *Penicillium* include those fungi that may cause allergic reactions to occupants if present indoors over a long period. According to Health Canada guidelines, the persistent presence of significant numbers of toxigenic fungi such as *Penicillium* indicates that further investigation and action should be taken accordingly.

According to the laboratory analytical report, six (6) of the seven (7) tape- lift samples collected contained mould growth, that ranged from sparse to moderate. Sample BT-007 contained *Aspergillus/Penicillium*, which can be associated with excess moisture levels and water-damaged substrates.

Based on the findings of this assessment, the following recommendations are made:

1. The sampling results suggest that the waste water storage building contains toxigenic mold and airborne spore counts above the guidelines recommended by Health Canada for indoor environments. As such, the building should be remediated to remove the toxigenic mold and reduce the airborne bio-aerosol levels to within the Health Canada guidelines. All materials in the affected areas need to be cleaned with a disinfecting solution. Any materials that cannot be cleaned should be removed.

2. Remediation should be performed by qualified mold abatement personnel utilizing industry standards and accepted practices to ensure occupant safety and quality remediation.

3. Bio-aerosol sampling should be conducted following the remediation to assess whether the remediation efforts were successful in removing the toxigenic mold spores and reducing the bio-aerosol levels to within the Health Canada guidelines.

1.0 INTRODUCTION

Rogers Enterprises Ltd. (REL) was requested by Wade Kelloway, Safety Coordinator, Newfoundland and Labrador Hydro, to conduct a bio-aerosol assessment in the waste water storage building at the Thermal Generating Station, Holyrood, Newfoundland. The bio-aerosol assessment was conducted by Amy Costello and Natasha Hickey, Industrial Hygiene Consultants for REL, on September 7, 2016.

This report discusses the findings of the assessment and makes recommendations to assist in controlling bio-aerosol concerns.

2.0 BACKGROUND INFORMATION

Newfoundland and Labrador Hydro (NL Hydro) is a provincial Crown corporation that generates and delivers electricity for Newfoundland and Labrador, Quebec, and the north-eastern areas of the United States. The company is a subsidiary of Nalcor Energy.

The NL Hydro Thermal Generating Station, located in Holyrood, is a 500 megawatt thermal generating station and has been in operation for almost 40 years.

The leftover waste water from the thermal generating process is housed in the waste water storage building. The building was constructed in 1992 and consists of a steel structure with metal siding. The basin has a 900,000 litre holding capacity. The warm waste water stored in the building creates humidity, causing condensation to build up on the walls and ceilings. Mechanical ventilation for the building consists of two five (5) horsepower roof mounted exhaust fans.

3.0 PURPOSE OF ASSESSMENT

The purpose of conducting the bio-aerosol assessment in the waste water storage building was to confirm or refute the presence of mold and to determine whether the airborne concentrations of bio-aerosols were within the guidelines, as cited in the Federal-Provincial Committee on "Environmental and Occupational Health, Fungal Contamination in Public Buildings" and the Canadian guidelines in "Indoor Air Quality in Office Buildings".

4.0 SCOPE OF ASSESSMENT AND SAMPLING METHODOLOGY

The scope of the assessment consisted of a visual inspection of the waste water storage building for signs of mold growth, bio-amplifiers, and water-damaged substrates. Both viable bio-aerosol and bio-tape samples were also collected inside the building.

A Bio-test RCS air sampler was used to sample for airborne fungi. This instrument has various sampling times and volumes. It has an air flow rate of 40 L/min and can be operated for 0.5 to 8.0 minutes. A sampling time of 4.0 minutes (volume of 160 litres) was used to collect potential airborne fungi samples. Air is drawn into the sampler by a fan connected to an internal motor. Any particles contained in the air are impacted by centrifugal force onto an agar medium. The samples were appropriately labeled, stored, and transported to EMC Scientific Inc., Mississauga, Ontario, for mold analysis.

Viable air samples refer to samples that are taken on growth media and subsequently incubated for mold propagules (spores and/or hyphal fragments) to germinate and form colonies. The resulting colonies are then enumerated and/or transferred to other media for identification to genus or species. Results are presented as a listing of the recovered molds and their corresponding number of colony forming units per cubic meter of air (CFU/m^3).

Sometimes the propagules impacted on the growth media may not germinate, not because they are not viable, but because of the molds response to the growth media used, competition from fast growing molds or that some molds can only grow on living hosts. Only culturable microorganisms can be enumerated and identified, sometimes leading to an underestimation of bio-aerosol concentration. One advantage of properly collected and analyzed viable air samples is that the data can be used to detect signs of the early stages of a mold problem, as well as growths in wall cavities or ventilation ducts (where dilution by outside air limits the sensitivity of the analysis).The major advantage of viable sampling is that the molds can be identified to individual (species) level. The disadvantage of this method is that it cannot detect non-viable (dead) spores yet these spores can still cause allergic reactions.

Bio-tape slides were used to collect tape lift samples. The sample is collected by placing the sticky side of a slide over a suspected contaminated surface. The slide then collects any mold spores present on the contaminated surface. The samples were appropriately labeled, stored, and transported to EMC Scientific Inc., Mississauga, Ontario, for analysis.

A total of five (5) bio-aerosol samples and seven (7) bio-tape lift samples were collected in the waste water storage building. The waste water storage building is divided into three (3) sections: periodic basin, continuous basin and the vestibule. Two (2) bio-aerosol samples and three (3) bio-tape lift samples were collected in both the periodic and the continuous basins and one (1) bio-aerosol sample and one (1) bio-tape lift sample was collected on the vestibule. One (1) additional air sample was collected outdoors for comparison purposes.

5.0 APPLICABLE GUIDELINES / LEGISLATION

The ACGIH Bio-aerosols Committee has recommended rank order assessment as a means of interpreting air sampling data. This interpretation has been part of the practice in Government of Canada investigations since 1986. The criteria for this survey is based on the guidelines cited in the Federal-Provincial Committee on Environmental and Occupational Health, Fungal Contamination in Public Buildings and the Canadian guidelines in "Indoor Air Quality in Office Buildings." The guideline statements are listed below.

- Significant numbers of certain pathogenic fungi should not be present in indoor air (Aspergillus fumigatus, Histoplasma and Cryptococcus). Bird or bat droppings near air intakes, in ducts or buildings should be assumed to contain these pathogens. Action should be taken accordingly.

- The persistent presence of significant numbers of toxigenic fungi (Stachybotrys atra, toxigenic Aspergillus, Penicillium and Fusarium species) indicates that further investigation and action should be taken accordingly.

- The confirmed presence of one or more fungal species occurring as a significant percentage of a sample in indoor air samples and not similarly present in concurrent outdoor samples is evidence of a fungal amplifier. Appropriate action should be taken.

- More than 50 CFU/m^3 of a single species (other than Cladosporium or Alternaria) may be reason for concern. Further investigation is necessary.

- Up to 150 CFU/m^3 is acceptable if there is a mixture of species reflective of the outdoor air spores. Higher counts suggest dirty or low efficiency air filters or other problems.

- Up to 500 CFU/m^3 is acceptable in summer if the species present are primarily Cladosporium or other tree and leaf fungi. Values higher than this may indicate failure of the filters or contamination in the building.

- The visible presence of fungi in humidifiers and on ducts, moldy ceiling tiles and other surfaces requires investigation and remedial action regardless of the airborne spore load.

6.0 BIO-AEROSOLS AND POTENTIAL HEALTH CONCERNS

According to the Canadian Centre for Occupational Health and Safety, molds and fungi are found in nature and are necessary for the breakdown of leaves, wood and other plant debris. These micro-organisms can enter a building directly or by their spores being carried in by the air. In a home or building, molds and fungi are usually found growing on wood, drywall, upholstery, fabric, wallpaper, drapery, ceiling tiles, and carpeting.

The key factor is moisture because molds and fungi need it to grow. As a result, molds and fungi are most often found in basements, kitchens and bathrooms. In buildings, moisture may be present as the result of flooding, leaks in the roof or plumbing, sealed buildings that do not allow excess moisture to escape, sources such as cooking facilities, showers, etc., or excess humidity.

The presence of mold does not always mean that health problems will occur. However, for some people the inhalation of the mold, fragments of the mold, or spores can lead to health problems or make certain health conditions worse. Molds can exacerbate (make worse) the symptoms of allergies including wheezing, chest tightness and shortness of breath, as well as nasal congestion and eye irritation. People who are immuno-suppressed or recovering from surgery are usually more susceptible to health problems from molds. Some molds have been known to produce toxins that are harmful to animals and humans when ingested, inhaled or in contact with the skin.

The Centers for Disease Control and Prevention (CDC) states that all molds should be treated the same in terms of health risk and removal. Some of the more common types of mold found in buildings include:

- Stachybotrys chartarum (also known as Stachybotrys atra)
- Aspergillus sp. (species)
- Penicillium sp.
- Fusarium sp.
- Trichoderma sp.
- Memnoniella sp.
- Cladosporium sp.
- Alternaria sp.

In addition, many of these molds make "mycotoxins". Mycotoxins are metabolites or by-products from the molds that have been identified as being toxic to humans. The molds that produce toxins are known as toxigenic molds. Many toxigenic molds, such as Stachybotrys chartarum and species of Aspergillus and Penicillium, have been found to infest buildings with known indoor air and building-related problems.

These toxins can slowly wear down the immune system and can lead to allergic or respiratory problems. In general, the most commonly reported symptoms include:

- runny nose or nasal congestion

- eye irritation
- cough or congestion
- aggravation of asthma
- fatigue
- headaches
- difficulty concentrating

In addition to mycotoxins, volatile organic compounds (moldy odours) released from actively growing molds may also pose a health risk.

According to the Mold and Bacteria Consulting Laboratories, molds may be grouped into three hazard classes based on their associated health risk.

- Class A hazard: includes fungi or their metabolic products that are highly hazardous to health. These fungi or metabolites should not be present in occupied dwellings. Immediate attention is required if the presence of these fungi is detected in occupied buildings.
- Class B hazard: includes fungi which may cause allergic reactions to occupants if present indoors over a long period of time.
- Class C hazard: includes fungi not known to be a hazard to health. Growth of these fungi indoors, however, may cause economic damage and therefore, should be remediated in a timely manner.

Following is a discussion of some of the more commonly found molds:

Penicillium species are very common molds. Spores of Penicillium are found everywhere in the air and soil. Penicillium species are one of the most common causes of spoilage of fruits and vegetables. It is widespread and has a wide range of habitats. In indoor environments it is extremely common on damp building materials, walls and wallpaper, floors, carpets, as well as mattress and upholstered furniture dust. It produces a number of toxins of moderate toxicity. It is allergenic and can infect immuno-compromised people. Penicillium brevicompactum is commonly found as the primary colonizer in water-damaged carpet, moist chipboard, wallpaper and other organic substrates, and some types of insulation. Penicillium brevicompactum can produce mycotoxins. Penicillium is classified as a Class B hazard.

Cladosporium is the most common of the so-called black molds. It produces a black pigment that protects it from ultraviolet light. This characteristic, as well as its growth and dispersal characteristics, is likely responsible for its presence and abundance in the environment. Airborne molds such as Cladosporium not only cause severe allergies, but in large amounts can severely affect asthmatics and persons with other restrictive airway diseases. Prolonged exposure can weaken the immune system allowing opportunistic bacteria and viruses to infect the host. Cladosporium is classified as a Class B hazard.

7.0 ASSESSMENT FINDINGS AND DISCUSSION

The sampling results for the bio-aerosol assessment conducted in the waste water storage building at the NL Hydro Thermal Generating Station on September 7, 2016 are presented and discussed below.

7.1 Sampling Results – Bio-aerosols

Five (5) viable bio-aerosol samples were collected inside the waste water storage building. The laboratory results for the bio-aerosol sampling are summarized in **Table 1** below; (the full laboratory analytical report is attached as **Appendix A**).

Table 1: Bio-aerosol Sampling Results - Waste Water Storage Building

Sample ID	Location	Sampling Results (CFU/m^3)
NLH-001	Outdoors	381
NLH-PB-002	Periodic Basin- south east	225
NLH-PB-003	Periodic Basin –	250
NLH-V-004	Vestibule	150
NLH-CB-005	Continuous Basin - east	231
NLH-CB-006	Continuous Basin - south	194
NLH-007	Blank	No Growth

As shown in **Table 1**, all five (5) samples collected within the building contained bio-aerosol growth, with sample results ranging from 150 CFU/m^3 (colony forming units per cubic metre of air) to 250 CFU/m^3. In comparison, the air sample collected outdoors contained an airborne spore count of 381 CFU/m^3.

According to Health Canada guidelines, up to 150 CFU/m^3 is acceptable in indoor environments if there is a mixture of species reflective of the outdoor air spores. All five samples collected inside the building exceeded the Health Canada guideline, with spore counts ranging from 150 CFU/m^3 to 250 CFU/m^3.

The laboratory analysis identified elevated levels of *Penicillium,* a Class B toxigenic mold species, on the five (5) of the viable bio-aerosol samples collected inside the building. Class B hazards, such as *Penicillium* include those fungi that may cause allergic reactions to occupants if present indoors over a long period. According to Health Canada guidelines, the persistent presence of significant numbers of toxigenic fungi such as *Penicillium* indicates that further investigation and action should be taken accordingly.

7.2 Sampling Results – Bio-tape Samples

Seven (7) bio-tape lift samples were collected inside the waste water storage building. The laboratory results for the bio-tape sampling are summarized in **Table 2** below; (the full laboratory analytical report is attached as **Appendix A**).

Table 2- Bio-tape Samples-Waste Water Storage Building

Sample ID	Location	Mould Identified	Mould Growth
BT-001	Periodic basin- south east	▪ *Phoma*-like ▪ *Acremonium*	▪ Sparse to moderate
BT-002	Periodic basin- south west	▪ Fungal hyphae ▪ *Acremonium*	▪ Sparse
BT-003	Periodic basin- west	▪ *Cladosopium*-like ▪ *Acremonium*	▪ Sparse to moderate
BT-004	Vestibule	▪ *Cladosopium* (a few spores) ▪ Fungal hyphae fragments (a few)	▪ None
BT-005	Continuous basin- east	▪ *Cladosopium*-like ▪ Rusts (a few spores)	▪ Sparse to moderate
BT-006	Continuous basin- south	▪ *Cladosopium*-like	▪ Moderate
BT-007	Continuous basin- south west	▪ Fungal hyphae ▪ *Aspergillus/Penicillium* (a few spores) ▪ *Cladosopium* (a few spores)	▪ Sparse
BT-008	Blank		None

As shown in **Table 2**, six (6) of the seven (7) samples collected indicated mould growth, ranging from sparse to moderate. Sample BT-007 contained *Aspergillus/Penicillium*, which can be associated with excess moisture levels and water-damaged substrates.

8.0 RECOMMENDATIONS

Based on the findings of this assessment, the following recommendations are made:

1. The sampling results suggest that the waste water storage building contains toxigenic mold and airborne spore counts above the guidelines recommended by Health Canada for indoor environments. As such, the building should be remediated to remove the toxigenic mold and reduce the airborne bio-aerosol levels to within the Health Canada guidelines. All materials in the affected areas need to be cleaned with a disinfecting solution. Any materials that cannot be cleaned should be removed.

2. Remediation should be performed by qualified mold abatement personnel utilizing industry standards and accepted practices to ensure occupant safety and quality remediation.

3. Bio-aerosol sampling should be conducted following the remediation to assess whether the remediation efforts were successful in removing the toxigenic mold spores and reducing the bio-aerosol levels to within the Health Canada guidelines.

9.0 CONCLUSION

Based on the results of the viable bio-aerosol assessment, it can be concluded that there is active mold growth in the waste water storage building at Holyrood. The air sampling results determined that all five (5) of the air samples collected inside the building contained elevated spore counts ranging from 150 CFU/$m^3$to 250 CFU/m^3, which is above the Health Canada guideline of 150 CFU/m^3 for indoor environments. Also, the sampling results identified elevated levels of *Penicillium,* a Class B toxigenic mold species, on five (5) of the samples collected inside the building. In addition, bio tape Sample BT-007 contained *Aspergillus/Penicillium*, which can be associated with excess moisture levels and water-damaged substrates.

While the waste water storage building at Holyrood is not occupied on a full-time basis, workers do enter and/or work in the building from time to time. As such, the recommendations outlined in **Section 8.0** of this report should be followed.

Amy Costello, CRSP
OH&S Project Coordinator
Industrial Hygiene Consultant

Rob Pitcher, CRSP
General Manager / Senior OH&S Consultant

Bruce Rogers, B.Sc., DIH, CRSP
CEO / Industrial Hygienist

Disclaimer

The information provided in this report is intended for Client use only. REL will not provide results or information to any party other than the Client, unless the Client, in writing, requests information to be provided to a third party or unless disclosure by REL is required by law. Unless consented to by REL, any use by a third party, or any reliance by a third party, on the information provided in this report is the sole responsibility of such third parties. REL accepts no responsibility for damages incurred by any party as a result of decisions made or actions conducted with respect to the contents of this report.

APPENDIX A: LABORATORY ANALYTICAL REPORT

emcscientific INCORPORATED

Laboratory Analysis Report

To:

Amy Costello
Rogers Enterprises Ltd.
10 Maverick Place
Paradise, Newfoundland
A1L 0J1

EMC LAB REPORT NUMBER: 59249
Job/Project Name: NL - Hydro
Job/Project No: **No. of Samples:** 7
Sample Type: RCS **Date Received:** Sep 8/16
Analysis Method(s): Quantification and Identification to Species
Date Analyzed: Sep 22&23/16 **Date Reported:** Sep 23/16
Analyst: Fajun Chen, Ph.D., *Principal Mycologist*

Client's Sample ID	**001**			**002**			**003**			**004**			**005**		
EMC Lab Sample No.	262706			262707			262708			262709			262710		
Sampling Date	Sep 7/16			Sep 7/16			Sep 7/16			Sep 7/16			Sep 7/16		
Description/Location	Outside			Periodic basin - east			Periodic basin - west			Vestibule			Continuous basin - east		
Air Volume (m^3)	0.160			0.160			0.160			0.160			0.160		
Fungal Name	CFU	%	CFU/m^3	CFU	%	CFU/m^3	CFU	%	CFU/m^3	CFU	%	CFU/m^3	CFU	%	CFU/m^3
Acremonium strictum										5	21	31			
Alternaria alternata													2	5	13
Botrytis cinerea													1	3	6
Cladosporium cladosporioides	30	49	188	15	42	94	15	38	94	4	17	25	12	32	75
Cladosporium herbarum	11	18	69	10	28	63	7	18	44	3	13	19	7	19	44
Cladosporium sphaerospermum										2	8	13	1	3	6
Geomyces pannorum													1	3	6
Penicillium corylophilum							1	3	6	1	4	6			
Penicillium decumbens				3	8	19	1	3	6	1	4	6	1	3	6
Penicillium oxalicum										1	4	6			
Penicillium spp							1	3	6	2	8	13	2	5	13
Verticillium lecanii				1	3	6									
Yeasts										3	13	19			
Non-sporulating isolates	20	33	125	7	19	44	15	38	94	2	8	13	10	27	63
Number of CFU/sample	61			36			40			24			37		
Detection Limit (CFU/M^3)	6			6			6			6			6		
TOTAL CFU/M^3	**381**			**225**			**250**			**150**			**231**		

Note:
1. CFU = Colony Forming Unit
2. Non-sporulating isolates are those failing to produce spores when identification is performed.
3. These results are only related to the sample(s) analyzed.

EMC Scientific Inc. 5800 Ambler Drive, Suite 100, Mississauga, ON L4W 4J4 Tel 905 629 9247, Fax 905 629 2607
AIHA EMPAT Participant (Lab ID# 174080)

emcscientific INCORPORATED

Laboratory Analysis Report

EMC LAB REPORT NUMBER: 59249
Client's Job/Project Name: NL - Hydro
Analyst: Fajun Chen, Ph.D., *Principal Mycologist*

Client's Sample ID	006			007											
EMC Lab Sample No.	262711			262712											
Sampling Date	Sep 7/16			Sep 7/16											
Description/Location	Continuous basin - S.W.			Blank											
Air Volume (m^3)	0.160			N/A											
Fungal Name	CFU	%	CFU/m^3	CFU	%	CFU/m^3	CFU	%	CFU/m^3	CFU	%	CFU/m^3	CFU	%	CFU/m^3
Acremonium strictum	2	6	13												
Alternaria alternata	1	3	6												
Botrytis cinerea															
Cladosporium cladosporioides	10	32	63												
Cladosporium herbarum	6	19	38												
Cladosporium sphaerospermum															
Geomyces pannorum															
Penicillium corylophilum															
Penicillium decumbens	2	6	13												
Penicillium oxalicum															
Penicillium spp	2	6	13												
Verticillium lecanii															
Yeasts	2	6	13												
Non-sporulating isolates	6	19	38												
Number of CFU/sample	31			0											
Detection Limit (CFU/M^3)	6			N/A											
TOTAL CFU/M^3	**194**			**No growth**											

Note:
1. CFU = Colony Forming Unit
2. Non-sporulating isolates are those failing to produce spores when identification is performed.
3. These results are only related to the sample(s) analyzed.

EMC Scientific Inc. 5800 Ambler Drive, Suite 100, Mississauga, ON L4W 4J4 Tel 905 629 9247, Fax 905 629 2607
AIHA EMPAT Participant (Lab ID# 174080)

emcscientific INCORPORATED

Laboratory Analysis Report

To:

Amy Costello
Rogers Enterprises Ltd.
10 Maverick Place
Paradise, Newfoundland
A1L 0J1

EMC LAB REPORT NUMBER: 59248
Job/Project Name: NL Hydro
Job/Project No: **No. of Samples:** 8
Sample Type: Tape Lift **Date Received:** Sep 8/16
Analysis Method(s): Direct Microscopic Examination
Date Analyzed: Sep 13/16 **Date Reported:** Sep 13/16
Analyst: Weizhong Liu, Ph.D., *Mycologist*
Approved By: Fajun Chen, Ph.D., *Principal Mycologist*

Client's Sample ID	Lab Sample No.	Date Sampled	Description/Location	Mould Identified, in Rank Order	Mould Growth
001	262698	Sep 7/16	Periodic basin – SE	*Phoma*-like *Acremonium*	Sparse to moderate
002	262699	Sep 7/16	Periodic basin – SW	Fungal hyphae *Acremonium*	Sparse
003	262700	Sep 7/16	Periodic basin – west	*Cladosporium*-like *Acremonium*	Sparse to moderate
004	262701	Sep 7/16	Vestibule	*Cladosporium* (a few spores) Fungal hyphal fragments (a few)	None
005	262702	Sep 7/16	Continuous basin – east	*Cladosporium*-like Rusts (a few spores)	Sparse to moderate
006	262703	Sep 7/16	Continuous basin – south	*Cladosporium*-like	Moderate
007	262704	Sep 7/16	Continuous basin – SW	Fungal hyphae *Aspergillus/Penicillium* (a few spores) *Cladosporium* (a few spores)	Sparse
008	262705	Sep 7/16	Blank	-	None

Note:
1. Mould growth is subjectively assessed with description terms sparse, moderate and abundant.
2. The presence of spores (lacking other fungal structures associated) is assessed as following: a few spores (< 10 spores average per microscopic field at 400X), some spores (10 - 100 spores average per microscopic field at 400X), many spores (> 100 spores average per microscopic field at 400X).
3. The presence of a few spores generally represents settled spores on the surface of the sample rather than indicating mould growth.
4. The results are only related to the samples analyzed.

EMC Scientific Inc. 5800 Ambler Drive • Suite 100 • Mississauga • Ontario • L4W 4J4 • T. 905 629 9247 • F. 905 629 2607
AIHA EMPAT Participant (Lab ID# 174080)

SOURCE REFERENCES

1. American Conference of Governmental Industrial Hygienists (ACGIH), Bio-aerosols Committee, www.acgih.org

2. Canadian Centre for Occupational Health and Safety (CCOHS).

3. Health Canada - *Indoor Air Quality in Office Buildings: A Technical Guide*, A Report on the Federal-Provincial Advisory Committee on Environmental and Occupational Health, Revised 1995.

4. Mold and Bacteria Consulting Laboratories, MBL Inc.

5. New York City Department of Health and Mental Hygiene, "Guidelines on Assessment and Remediation of Fungi in Indoor Environments", 2007, www.nyc.gov

6. University of Toronto, www.botany.utoronto.ca ResearchLabs/MallochLab/Malloch/Moulds/Penicillium.html

6. Inspect Chemical Tanks - Holyrood



2021 Capital Budget Application

Inspect Chemical Tanks

Holyrood

July 2020

A report to the Board of Commissioners of Public Utilities

newfoundland labrador hydro
a nalcor energy company

Executive Summary

Newfoundland and Labrador Hydro ("Hydro") conducts asset management activities to proactively identify, replace, repair, or refurbish equipment to minimize the disruption of service and to avoid unsafe working conditions due to equipment failure. To support the continued safe and reliable operation of the Holyrood Thermal Generating Station ("Holyrood TGS") at its rated output, Hydro is proposing to inspect it's water treatment caustic and acid chemical tanks.

The Water Treatment Plant ("WTP") at Holyrood TGS utilizes storage tanks that contain sulfuric acid (H_2SO_4) and caustic (NaOH Sodium Hydroxide). The chemicals are used in the water treatment process to convert raw water into deionized boiler feed water for steam production. The chemicals are also used by the Waste Water Treatment Plant ("WWTP") to treat site drainage waste water and leachate from the site landfill. A total of seven tanks are currently in use for the storage and mixing of the sulfuric acid and caustic.

Hydro is proposing the inspection of these chemical storage tanks to maintain safe and reliable operation of the Holyrood TGS.

This project is estimated to cost approximately $919,800.

Contents

Executive Summary i
1.0 Introduction 1
2.0 Background 1
2.1 Existing System 1
2.2 Operating Experience 2
3.0 Justification 3
4.0 Analysis 3
4.1 Identification of Alternatives 3
4.2 Evaluation of Alternatives 3
4.2.1 Defer 3
4.2.2 Install New Chemical Storage Tanks 4
4.2.3 Complete Inspection and Refurbishment of the Chemical Storage Tanks 4
4.3 Recommended Alternative 4
5.0 Project Description 5
6.0 Conclusion 6

1.0 Introduction

The WTP at Holyrood TGS utilizes storage tanks that contain sulfuric acid (H_2SO_4) and caustic (NaOH Sodium Hydroxide). These chemicals are used in the water treatment process to convert raw water into deionized boiler feed water for steam production. They are also used by the WWTP to treat site drainage waste water and leachate from the site landfill.



Figure 1: Chemical Storage Tanks at Water Treatment Plant

2.0 Background

2.1 Existing System

There are two acid tanks which are 8 feet in diameter and 16 feet long. There are two caustic storage tanks, one caustic mixing tank, one horizontal caustic storage tank (20% solution), and one WWTP caustic tank. The caustic storage tanks have varying sizes that range from 8 feet in diameter by 10 feet long to 6 feet in diameter and 20 feet long.



Figure 2: Chemical Storage Tanks at Water Treatment Plant

2.2 Operating Experience

Chemical storage tanks are an essential component of the water treatment plant and waste water treatment plant. Periodic out of service inspection and refurbishment work are completed on chemical storage tanks as per applicable codes and standards. The last inspection and refurbishment work was completed on the chemical storage tanks in 2010.

In 2010 an out of service inspection was completed on the acid tanks through the roof access openings. The inspection scope included visual examination and non-destructive evaluation ("NDE") of the internal portion of the tank which included welds on the tank shells, thickness measurement of the floor plates, and inspection for cracks and indications on the nozzles and piping. Some notable findings were hydrogen grooving and pitting along the circumference of the tank shell as well as corrosion on welds. A

number of weld repairs and piping replacements were carried out as a result of the inspection recommendations. The tanks have been operating reliably since this work was performed.

3.0 Justification

The three boilers at Holyrood require treated feed water in order to produce suitable steam for power generation. The chemical tanks are necessary components of the water treatment plant and therefore required for operation during steam production. The caustic tank will also be an important component to service the waste water treatment plant which will remain in service after final steam production. Liquid Storage Tanks containing hazardous materials are required by API and ASME Codes to be inspected every ten years. Out of service inspections are necessary to ensure that the tanks are structurally sound, suitable for operation, and not at risk of releasing chemicals into the environment. Release of chemicals could lead to a fire hazard or exposure risk for personnel. The results of the inspection will be used to inform any immediate work to be completed and to develop future maintenance and capital plans. This project will ensure the safe and reliable operation of the existing equipment without the need for full replacement.

4.0 Analysis

4.1 Identification of Alternatives

Hydro has evaluated the following alternatives:

- Alternative 1: Defer;
- Alternative 2: Install new chemical storage tanks.; and
- Alternative 3: Complete inspection and refurbishment of the chemical storage tanks.

4.2 Evaluation of Alternatives

4.2.1 Defer

Under this alternative the inspection and refurbishment work would not be completed in 2021. Liquid Storage Tanks containing hazardous materials and are required by API and ASME Codes to be inspected every ten years. The last inspection took place in 2010 and a number of weld repairs and piping replacements were carried out as a result of the inspection recommendations. Forgoing inspection or refurbishment of the chemical tanks could cause untreated internal pitting/indications/cracks to grow larger and develop into leaks. A leak on either of these chemical systems would compromise its

operation and make for unsafe working conditions. The acid and caustic chemicals are extremely corrosive and cause severe burning when in contact with the eyes or skin and highly toxic when inhaled. They also contribute to fire hazards igniting combustible materials on contact and vapors emitting from the product can contain explosive hydrogen gas.

If the chemical system is out of service, the water treatment plant would be inoperable, and the boilers would be forced out of service once their short reserve feedwater supplies are depleted. The landfill leachate and site waste water would also go untreated due to a forced outage of the waste water treatment system, resulting in environmental non-compliance.

As such this alternative is not viable as it presents an unacceptable risk to Hydro's ability to safely and reliably operate the water treatment system.

4.2.2 Install New Chemical Storage Tanks

This alternative involves replacement of the chemical storage tanks which carries significant costs and outage time. It would not be possible to remove the existing tanks and install replacement tanks in the same locations due to the small work space. New tanks would have to be installed at a separate location and the existing tanks would be abandoned in place. A building expansion would be required to provide sufficient space for replacement tanks and major rerouting of piping and electrical would also be required.

4.2.3 Complete Inspection and Refurbishment of the Chemical Storage Tanks

This alternative involves a Level 2 internal inspection and engineering assessment of the chemical storage tanks, associated piping, and valves. This inspection would involve removing the asset from service, cleaning and gas testing of the chemical storage tanks and an inspection of the tank and piping by a third party specialist as per ASME and API Codes. Any deficiencies found during the inspection that could compromise the reliability of the system will be addressed under the project while the assets are out of service.

4.3 Recommended Alternative

Hydro recommends the inspection and refurbishment of the chemical storage tanks (Alternative 3) to maintain safe and reliable operation of the Holyrood TGS.

5.0 Project Description

The deliverables of this project are to complete the inspection of chemical tanks, associated piping, and valves, including but not limited to:

- Isolate, gas test and clean caustic and acid chemical tanks;
- Perform level 2 NDT inspections of the chemical tanks as per ASME/API Codes including the use of:
  - ultrasonic thickness measurement;
  - wet fluorescent magnetic particle;
  - radiographic surveys; and
  - guided wave measurements; and
- Engineering assessment of inspection results and completion of necessary work.

The estimate for this project is shown in Table 1.

Table 1: Project Estimate ($000)

Project Cost	2021	2022	Beyond	Total
Material Supply	60.0	0.0	0.0	**60.0**
Labour	345.3	0.0	0.0	**345.3**
Consultant	100.0	0.0	0.0	**100.0**
Contract Work	290.0	0.0	0.0	**290.0**
Other Direct Costs	3.0	0.0	0.0	**3.0**
Interest and Escalation	43.6	0.0	0.0	**43.6**
Contingency	77.9	0.0	0.0	**77.9**
Total	**919.8**	**0.0**	**0.0**	**919.8**

The anticipated project schedule is shown in Table 2

Table 2: Project Schedule

Activity	Start Date	End Date
Planning:		
Open work order and plan and develop detailed schedules	January 2021	February 2021
Engineering:		
Site visit, tender for Level 2 NDT, and engineering assessment for the tanks	March 2021	May 2021
Procurement:		
Patch plate, welding materials should be sourced before inspection	June 2021	June 2021
Construction:		
Chemical tank isolation, gas testing, cleaning for NDT inspection, engineering assessment and refurbishment as required based on the NDT readings	July 2021	August 2021
Commissioning:		
Tank release to operations after inspection and refurbishment if required	August 2021	September 2021
Closeout:		
Close work order, complete all documentation, and complete lessons learned	October 2021	November 2021

6.0 Conclusion

The chemical storage tanks at the Holyrood TGS are necessary components of the water treatment plant and WWTP. The WTP is required for operation during steam production and the WWTP which is required to treat plant waste water, will remain in service after final steam production. Hydro is proposing to inspect the caustic and acid chemical tanks and complete necessary refurbishment to maintain safe and reliable operation of the Holyrood TGS.

7. Overhaul Unit 3 Generator - Holyrood



2021 Capital Budget Application

Overhaul Unit 3 Generator

Holyrood

July 2020

A report to the Board of Commissioners of Public Utilities

newfoundland labrador hydro
a nalcor energy company

Executive Summary

To support the continued safe and reliable operation of the Holyrood Thermal Generating Station ("Holyrood TGS") at its rated output, Newfoundland and Labrador Hydro ("Hydro") is proposing an overhaul of the Holyrood TGS Unit 3 generator. Unit 3 will continue to support the electrical system as a synchronous condenser once the Holyrood TGS is no longer required as a generating station.

Although the Unit 3 generator was last overhauled in 2016 and is, therefore, not due for overhaul until 2022,[1] Unit 3's stator is scheduled to be refurbished in 2021.[2] Several of the activities required for the Unit 3 overhaul are also completed during the stator refurbishment, providing Hydro with an opportunity to complete the generator overhaul without requiring further disassembly and reassembly. The scope overlap between these two projects provides the opportunity for a material reduction in cost compared to completing the generator overhaul in 2022 as scheduled.

The budget estimate for this project is $572,700. The project will be executed in 2021 in parallel with the execution of Unit 3's stator refurbishment in the spring of 2021.

[1] A six-year overhaul cycle is consistent with Original Equipment Manufacturer recommendations.
[2] Approved in Board Order No. P.U. 6(2020).

Contents

Executive Summary i
1.0 Introduction 1
2.0 Background 1
2.1 Existing System 1
2.2 Operating Experience 2
3.0 Justification 2
4.0 Analysis 3
4.1 Identification of Alternatives 3
4.2 Evaluation of Alternatives 3
4.2.1 Deferral 3
4.2.2 Condition-Based Refurbishment 3
4.2.3 Overhaul in 2021 3
4.3 Recommended Alternative 3
5.0 Project Description 4
6.0 Conclusion 5

1.0 Introduction

The three major components of the Holyrood TGS units are the power boiler, turbine, and generator. Through combustion of No. 6 fuel oil, the power boiler provides high-energy steam to the turbine. The turbine is directly coupled (or connected) to the generator and provides the rotating energy necessary for the generator to produce rated output power. To support safe and reliable operation, the generators are overhauled on a six-year cycle. The last overhaul of the Unit 3 generator was in 2016; however, as several of the activities required for the Unit 3 generator overhaul are also completed during the stator refurbishment, Hydro is proposing to complete the generator overhaul a year early to avail of the cost efficiencies that can be achieved as a result of the shared work scope between these two projects. If approved, Unit 3 will be disassembled during the approved Rewind Unit 3 Stator project in 2021. Executing this project in conjunction with the Rewind Unit 3 Stator project rather than completing it as a stand alone project in 2022 will provide cost savings of approximately $500,000.

2.0 Background

2.1 Existing System

The Holyrood TGS generators are complex mechanical and electrical systems. The Unit 3 generator is comprised of two primary components, a rotor and stator. The rotor is coupled to, and driven by, the steam turbine and rotates inside the stator to produce electricity in the stator windings. The generator is pressurized and cooled by hydrogen gas to provide maximum efficiency. Brushes electrically connect the rotor windings, through collector rings, to the exciter. The exciter energizes the rotor windings, which creates the rotating field for electricity generation. The individual stator and rotor windings are separated by insulation strips and held in place by a system of wedges.

The generator is supported by two journal bearings. Hydrogen seals utilize oil to ensure that the hydrogen does not escape between the rotor and stator components at both ends of the generator. Hydrogen coolers utilize cooling water to maintain the hydrogen temperature within the generator.

Unit 3 is also capable of functioning as a synchronous condenser to assist with system voltage regulation. As a synchronous condenser, the generator is accelerated to 3,600 rpm and synchronized with the power system. The magnetic field induced by the power system spins the rotor, and the machine operates as a motor. By adjustments made to the magnetic field of the rotor, the unit provides capacitive reactive power to the power system, mitigating losses that would otherwise prohibit the

power system from delivering active power to its customers at maximum efficiency. This mode of operation will be critical for the optimal operation of the power system once the Labrador-Island Link is integrated. Unit 3 will continue to operate as a synchronous condenser after the Holyrood TGS is no longer required as a generating station.

2.2 Operating Experience

The Unit 3 generator went into service in 1980 under the Stage 2 of the Holyrood TGS development and has experienced a total of approximately 222,000 hours of operation for generation and synchronous condensing since that time. By mid-2021, the generator is expected to have approximately 229,000 operating hours.

The frequency of generator overhauls at Holyrood TGS is every six years. This cycle was determined by Hydro in consultation with the Original Equipment Manufacturer, General Electric, and engineering consulting firm Wood Canada Limited.

Hydro has generally completed scheduled generator overhauls on the Unit 3 generator on a six-year basis since 1980. The next overhaul is scheduled to take place in 2022.

3.0 Justification

This project is required to support the safe and reliable operation of Holyrood TGS Unit 3 at rated output and reliable operation as a synchronous condenser after the Holyrood TGS is no longer required as a generating station. The overhaul will return the generator and auxiliary systems to design specifications such that they can perform safely, efficiently, and reliably. The overhaul will also identify any internal conditions that could lead to premature failure of the equipment if not corrected or controlled.

Advancing the Unit 3 generator overhaul by one year to coincide with the stator rewind in 2021 will result in estimated cost savings of approximately $500,000. Completing the two projects at the same time also reduces wear on the generator as every time a generating unit is opened its fastening components such as heat shrink bolts, coupling flanges, locking tabs, etc., are subjected to accelerated wear. Additionally, the process of disassembly and reassembly creates technical risks (such as misalignment, foreign material intrusion, higher operational vibration, among others) that should be balanced with the benefits of the overhaul. Therefore, it is good practice to minimize the number of times a generating unit is disassembled.

4.0 Analysis

4.1 Identification of Alternatives

Hydro evaluated the following alternatives:

- Deferral;
- Condition-based refurbishment; and
- Overhaul in 2021.

4.2 Evaluation of Alternatives

4.2.1 Deferral

In this alternative, the project would be deferred for a year and the overhaul would be proposed for completion in 2022 in accordance with the established six-year overhaul cycle. This would require several tasks that are already planned as part of the 2021 Rewind Unit 3 Stator project scope of work to be repeated, including generator disassembly and reassembly. This alternative is estimated to cost over $1 million.

4.2.2 Condition-Based Refurbishment

The condition of several critical components of this unit cannot be assessed without shutting down and dismantling the unit. For components that can either be assessed without material interference in the operation of the unit or can be assessed during planned outages, Hydro has completed testing where possible. Condition-based refurbishment is not a viable alternative for this unit due to the nature of the components of the unit requiring shut down and dismantling in order to assess the condition.

4.2.3 Overhaul in 2021

This alternative consists of overhauling the Unit 3 generator in 2021 in conjunction with the 2021 Rewind Unit 3 Stator project. This alternative allows Hydro to effectively plan the intervention and manage risk within an acceptable level and avail of the opportunity for significant cost savings to combine this work with the stator rewind. This alternative is estimated to cost $572,700.

4.3 Recommended Alternative

Hydro recommends the overhaul of the Unit 3 generator in 2021. Completing the Unit 3 generator overhaul will support the safe and reliable operation of Holyrood TGS Unit 3 at rated output and reliable

operation as a synchronous condenser after the Holyrood TGS in no longer required as a generating station. Completing the generator overhaul in 2021 in conjunction with the stator rewind is the least-cost option, saving approximately $500,000 compared to completing it as a stand-alone project.

5.0 Project Description

The scope of the Holyrood TGS Unit 3 generator overhaul consists of:

- Detailed visual inspection of the rotor and its components;
- Testing of the rotor and its components;
- Detailed inspection, cleaning, and minor refurbishment of the generator's mating surfaces;
- Detailed inspection, cleaning, and minor refurbishment or replacement, if required, of the generator's bearings;
- Detailed inspection, cleaning, and minor refurbishment or replacement, if required, of the generator's oil and hydrogen seals;
- Detailed inspection, cleaning, testing, and minor refurbishment of the generator's hydrogen coolers;
- Lube oil flush; and
- Detailed inspection, cleaning and minor refurbishment of the generator's seal oil systems.

The project estimate is shown in Table 1. This estimate is based on the project being executed in conjunction with the stator rewind.

Table 1: Project Estimate ($000)

Project Cost	2021	2022	Beyond	Total
Material Supply	0.0	0.0	0.0	**0.0**
Labour	25.3	0.0	0.0	**25.3**
Consultant	0.0	0.0	0.0	**0.0**
Contract Work	494.1	0.0	0.0	**494.1**
Other Direct Costs	0.0	0.0	0.0	**0.0**
Interest and Escalation	27.3	0.0	0.0	**27.3**
Contingency	26.0	0.0	0.0	**26.0**
Total	**572.7**	**0.0**	**0.0**	**572.7**

The anticipated project schedule is shown in Table 2.

Table 2: Project Schedule

Activity	Start Date	End Date
Planning:		
Outage planning	February 2021	March 2021
Design:		
Identification of parts, test parameters, procedures and acceptable results	Not required for this project as it will be completed as part of the 2021 Rewind Unit 3 Stator project.	
Procurement:		
Purchasing and ordering of required parts and equipment	March 2021	April 2021
Construction:		
Carry out the overhaul in parallel with the 2021 Rewind Unit 3 Stator project	June 2021	July 2021
Commissioning:		
Verification of results and energization of the unit	August 2021	August 2021
Closeout:		
Lessons learned and final disbursements	September 2021	October 2021

6.0 Conclusion

To support the continued safe and reliable operation of Holyrood TGS Unit 3 at rated output and its reliable operation as a synchronous condenser after the Holyrood TGS in no longer required as a generating station, Hydro recommends overhauling the Unit 3 generator. To realize substantial cost savings and achieve the least-cost option, Hydro recommends completing the overhaul in conjunction with the stator rewind project in 2021.

8. Upgrade Distributed Control System Hardware - Holyrood



2021 Capital Budget Application

Upgrade Distributed Control System Hardware

Holyrood

July 2020

A report to the Board of Commissioners of Public Utilities

newfoundland labrador hydro
a nalcor energy company

Executive Summary

To support the continued safe and reliable operation of the Holyrood Thermal Generating Station ("Holyrood TGS") in post-steam operation, Newfoundland and Labrador Hydro ("Hydro") is proposing to complete the Upgrade Distributed Control System ("DCS") Hardware - Holyrood project. The project is based on recommendations from the "Schneider Electric Lifecycle Assessment Summary and Upgrade Planning Roadmap" (provided in Attachment 1), which outlines the obsolete and soon-to-be obsolete DCS hardware at the Holyrood TGS.

The Original Equipment Manufacturer ("OEM")[1] has advised that the existing DCS hardware will no longer be supported beyond January 2023. However, post-steam operation of the Holyrood TGS requires parts of the DCS to operate reliably beyond that point in time. Although obsolete DCS hardware may continue to operate, the risk of extended unplanned outages in the event of a DCS hardware failure increases once the OEM no longer supports the obsolete DCS hardware. To ensure the continued reliability of the Holyrood TGS DCS, Hydro recommends the replacement of obsolete and soon-to-be obsolete DCS hardware required for post-steam operation.

The budget estimate for this project is $728,600. The two-year project is expected to be complete prior to the 2022–2023 winter operating season.

[1] Schneider Electric is the OEM for the DCS.

Contents

Executive Summary i
1.0 Introduction 1
2.0 Background 1
2.1 Existing System 1
2.2 Operating Experience 4
3.0 Justification 5
4.0 Analysis 5
4.1 Identification of Alternatives 5
4.2 Evaluation of Alternatives 5
4.2.1 Deferral 5
4.2.2 Upgrade DCS Hardware 6
4.3 Recommended Alternative 6
5.0 Project Description 6
6.0 Conclusion 8

List of Attachments

Attachment 1: Schneider Electric Lifecycle Assessment Summary and Upgrade Planning Roadmap

1.0 Introduction

The Holyrood TGS DCS consists of hardware and software components that control and monitor plant equipment such as boilers, turbines, breakers, and transformers. Control is performed automatically via processors and/or interactively via operators utilizing computer stations known as Human Machine Interfaces ("HMIs").

The DCS hardware consists of processors, input/output ("I/O") modules, computer stations, network switches, and servers. Software installed on the DCS hardware provides control, setpoint adjustments, alarms, trip actions, and historical information collection of connected equipment. According to the vendor's product lifecycle, a large percentage of the processors, computer stations, network switches, and servers at the Holyrood TGS are obsolete or will be obsolete in the near future. This includes many of the components required for post-steam operation.

2.0 Background

2.1 Existing System

The existing Foxboro DCS hardware components at the Holyrood TGS were installed between the early 2000s and 2012 as an upgrade to the original Westinghouse control system. The hardware consists of five main components:

1) Processors;
2) I/O modules;
3) Computer stations;
4) Network switches; and
5) Servers

The Holyrood TGS DCS is divided into five logical areas:

1) Unit 1;
2) Unit 2;
3) Unit 3;

4) Station Service; and

5) Waste Water Treatment Plant.

Each area contains some or all of the five hardware components listed above. Only the DCS components in Unit 3, station service, and the waste water treatment plant will be required for post-steam operation and are included in this project.

The processors, which are the brains of the DCS, incorporate I/O modules and software configurations to make automatic decisions related to the control of the area. These processors and I/O modules are located in control cabinets. The soon-to-be obsolete FCP270 processors are shown with a red box around them in Figure 1. The I/O modules are shown with a blue box to the right of the processors.

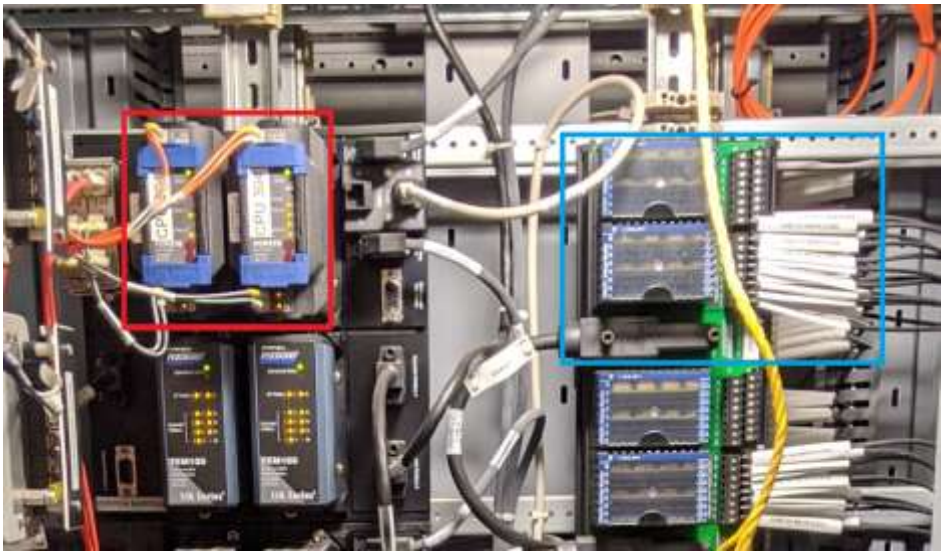

Figure 1: Typical Control Cabinet

The computer stations perform one of two different functions:

1) Engineering stations are used to store the latest processor configurations, view DCS health information, and modify the configuration of the processors; and

2) HMIs are located in a control room to allow operators to monitor and control the areas in a safe and noise-free environment. HMIs show current operating values, setpoints, equipment status (such as open/closed, on/off, etc.) and display process alarms. Figure 2 shows a typical HMI.



Figure 2: Typical HMI

Network switches are used to communicate information between processors, servers and computer stations. A typical network switch is shown in Figure 3.



Figure 3: Typical Network Switch

Servers are used to collect historical information such as equipment trending or alarm history. The information collected is used to aid in planning maintenance activities as well as troubleshooting operating issues at the station. A typical server is shown in Figure 4.



Figure 4: Typical Server

The existing DCS architecture, including the lifecycle phase of components in all areas, is shown in Attachment 1. Each area has a dedicated HMI used for control and monitoring. An area may contain anywhere from one to several processors depending on the amount of I/O and the complexity of the configuration.

2.2 Operating Experience

The Schneider Electric DCS has been in operation for 24 hours per day since installation in the early 2000s and requires replacement due to obsolescence. During its lifetime, standard OEM recommendations were performed by the OEM, resulting in no major failures to date. Since installation, Hydro has had a service agreement with Schneider for the Holyrood DCS. This includes site visits twice a year by a Schneider technical representative to perform regular maintenance checks on the system including, but not limited to, a general health check, uploading the latest configurations, performing backups, and downloading the latest approved firmware. Overall, the system has been operating reliably due to a combination of OEM preventive maintenance and availability of spares equipment that were not obsolete at the time of replacement.

3.0 Justification

Schneider Electric was contracted in 2018 to provide a "Lifecycle Assessment Summary and Upgrade Planning Roadmap" that outlines the lifecycle phases of the DCS hardware installed at the Holyrood TGS. The report, included in Attachment 1, contains two main findings:

1) Most of the computer stations, servers, and network switches are either already obsolete or will be obsolete by February 2023; and
2) The main control processors, FCP270 and ZCP270, were withdrawn from sales in 2017 and 2018, respectively, and will only receive guaranteed support from the OEM until January 2023.

The OEM identifies DCS hardware components as obsolete when they are no longer able to offer support, maintenance, repair, or replacements for them. The lack of support increases the probability of an extended outage if components fail during operation. For example, as the processors currently offered by the manufacturer are not hot swappable with the existing processors, an extended shutdown would be required to reprogram and test a new processor to ensure continued functionality.

To continue to use obsolete DCS hardware would negatively impact the post-steam reliability of the Holyrood TGS. Therefore, a planned approach to replacement is prudent.

4.0 Analysis

4.1 Identification of Alternatives

Hydro evaluated the following alternatives:

- Deferral; and
- Upgrade DCS hardware

4.2 Evaluation of Alternatives

4.2.1 Deferral

Under this alternative, systems will not be replaced in 2021–2022. Repairs will be completed upon failure if possible, but it is more likely that replacement will be required due to hardware obsolescence. Starting in January 2023, replacing the hardware outside of a scheduled shutdown will require an extended outage due to the configuration modifications required within the hardware cabinet and

within the software. Once a replacement is installed, extensive testing will be required before the equipment is released for service to ensure continued functionality.

Deferral of the project increases the risk of failure while in-service, which could result in unit outages during Hydro's winter 2022–2023 operating season. As such, this alternative is not viable as it presents an unacceptable risk to Hydro's ability to safely and reliably meet customer needs while the Holyrood TGS is operating as a synchronous condenser.

4.2.2 Upgrade DCS Hardware

Under this alternative, the obsolete and soon-to-be obsolete DCS hardware such as processors, servers, computer stations, and network switches required for post-steam operation will be replaced with the latest product offerings. A planned approach will maintain the reliability of the system as the OEM will guarantee replacement parts and support for the new components for the foreseeable future. Under this approach, factory acceptance testing would be completed by the OEM in a test environment prior to shipping the equipment to site. This approach will provide a high level of confidence that the new system will function as intended during the site installation and commissioning.

4.3 Recommended Alternative

Hydro recommends upgrading the DCS hardware in 2021–2022. The DCS hardware and software are required for post-steam operation of the Holyrood TGS. This approach allows Hydro to complete replacement in a planned manner while continuing to safely and reliably operate the Holyrood TGS.

5.0 Project Description

This project includes the replacement of obsolete or soon-to-be obsolete DCS hardware such as processors, servers, computer stations, and network switches. The scope of the replacement includes only those areas that are required for post-steam operation:

- Unit 3 (will be used as a synchronous condenser; burner management not required);
- Station Service; and
- Waste Water Treatment Plant.

Replacing DCS hardware for these three areas will require six redundant processors, two servers, four computer stations, and three network switches.

The OEM will complete the software configurations for the new equipment.

As part of the upgrade, the OEM will complete factory acceptance testing at its own facility using all new DCS hardware to complete functional checks of hardware and software. After the DCS hardware is accepted it will be shipped to the Holyrood TGS and installed and commissioned during the following planned maintenance outage. The new equipment will be installed under the supervision of an OEM representative.

The project estimate is shown in Table 1.

Table 1: Project Estimate ($000)

Project Cost	2021	2022	Beyond	Total
Material Supply	0.0	5.0	0.0	**5.0**
Labour	36.3	106.4	0.0	**142.7**
Consultant	0.0	0.0	0.0	**0.0**
Contract Work	268.2	178.8	0.0	**447.0**
Other Direct Costs	4.6	1.8	0.0	**6.4**
Interest and Escalation	20.4	47.0	0.0	**67.4**
Contingency	30.9	29.2	0.0	**60.1**
Total	**360.4**	**368.2**	0.0	**728.6**

The anticipated project schedule is shown in Table 2.

Table 2: Project Schedule

Activity	Start Date	End Date
Planning:		
Preparing detailed schedule	February 2021	March 2021
Design:		
Detailed design	February 2021	April 2021
Procurement:		
Contract award	May 2021	June 2021
Factory Acceptance Testing:		
Verification of new hardware and software at OEM's site	September 2021	September 2021
Construction/Commissioning:		
Replacement of processors, computer stations, network switches, and servers	June 2022	July 2022
Closeout:		
Prepare closeout activities	November 2022	November 2022

6.0 Conclusion

To support the continued safe and reliable operation of the Holyrood TGS during post-steam operation, Hydro recommends replacement of obsolete or soon-to-be obsolete DCS hardware required for to post-steam operation of Unit 3, the Waste Water Treatment Plant, and Station Service. This project will minimize the risk of an extended unplanned outage at the Holyrood TGS due to DCS hardware issues during post-steam operations.

Attachment 1

Schneider Electric Lifecycle Assessment Summary and Upgrade Planning Roadmap

newfoundland labrador hydro
a nalcor energy company

EcoStruxure™
Innovation At Every Level

Foxboro.
by Schneider Electric

Triconex.
by Schneider Electric

MODICON
products from Schneider Electric

CUSTOMER FIRST PROGRAM

Annual Lifecycle Assessment Summary and Upgrade Planning Roadmap

for

Newfoundland & Labrador Hydro

(Holyrood, Conception Bay)

November 2018



Contacts:
Name: Tasso Athanasoulias
Title: Product Sales Executive
Mobile: 1 514 237 7171
E-mail: Tasso.Athanasoulias@schneider-electric.com

Customer Information

Client Name:	Newfoundland & Labrador Hydro
Site Name:	Holyrood
Location:	Holyrood, NL
Customer FIRST Contract Type:	Premium
Date:	1/1/2014 - 31/12/2018
Name of Preparer:	Patrick Gosselin

Why Upgrade

Schneider Electric's Product Lifecycle discipline for Foxboro systems plays a strong underlying role in customer support. All products move through lifecycle phases as they age, which has a direct relationship with their supportability. As part of your Customer FIRST Support and Services Agreement, Schneider Electric will help you identify and manage the key lifecycle stages of your Foxboro system assets to avoid obsolescence.

This Lifecycle Assessment Summary and Upgrade Planning Roadmap report will provide you with a clear understanding of your installed system components' current product lifecycle phases and identify a logical progression for the potential upgrade of Foxboro equipment, software and files to Preferred (current) phase products. It may also touch on other Schneider Electric and third party products. Your Schneider Electric representative will review this report with you to help ensure that you have a through grounding in its details, which will help you facilitate effective short and long term upgrade planning decisions.

Schneider Electric's Lifecycle Assessment Summary and Upgrade Planning Roadmap report provides the best upgrade strategy to keep your Foxboro system operating at peak performance, and will:

- Retain the original investment made in the cost of DCS engineering and installation
- Reduce maintenance costs
- Provide an upgrade path to new technology
- Mitigate risks associated with obsolescence
- Meet new business needs not supported by the current system

This Lifecycle Assessment Summary and Upgrade Planning Roadmap report is not a proposal, but serves as a summary of Schneider Electric's assessment of the current lifecycle positions of the components of your Foxboro assets. It provides a useful framework for AV Group NB Inc. and Schneider Electric to work together to discuss, capture and implement more detailed plans that will deliver the overall goal.

Foxboro Product Lifecycle Program

Foxboro has adopted a five-tiered product lifecycle program consisting of the following phases: Preferred, Available, Mature, Lifetime, and Obsolete. This phased lifecycle approach has been applied to the hardware and software products that comprise Foxboro system solutions.

A regularly updated Product Phase Document is posted on Schneider Electric's Global Customer Support website[1]. The document lists the lifecycle phase of each major component and the date it will transition to the next phase.

1) Products in the **Preferred Phase** are Standard Hardware and Software that are the current products available in their functional category. Products in this category are actively being promoted, enhanced, produced, and sold. The length of time a product remains in this phase is variable. Many products transition to the Available Phase, while others may move directly to the Mature Phase.
2) Products in the **Available Phase** represent Standard Products that are available for sale and are being produced, but are no longer the Preferred Product offering and generally are no longer being enhanced. Typically, these products are sold for expansions, not for new installations. These products are generally no longer being enhanced. This designation also serves as early notice that the product will be withdrawn from sale. The length of time a product remains in this phase is variable.
3) The **Mature Phase** begins when the product is withdrawn from sale, and no more enhancements are provided. Before the product is withdrawn, we are committed to ensure that a comprehensive, clearly defined support program is firmly in place. The length of time that Standard Product remains in this phase varies based on product type and availability of components needed to support the product.
4) **Lifetime Phase** begins at the end of the predefined Mature Phase. Products will be supported on a best efforts basis for as long as we can provide a quality repair or replacement. Most products transition to the Lifetime Phase, while others may move directly to the Obsolete Phase because, at some point, we will no longer be able to repair or replace a given product. At that time, a Customer Notification is pro-actively pushed to our registered users identifying the product's Obsolete date.
5) **Obsolete Phase** products are typically identified when, after our best effort to support, maintain, repair, or offer replacements, we find that we cannot continue to do so. While we strive to provide at least one year's advance notice for a product entering the Obsolete phase based on a supply of replacement or repairable modules, we cannot guarantee in all cases such advance notice will always be made.

Current System Status:

PRODUCTS LIFECYCLE PHASES = Newfoundland & Labrador Hydro (Holyrood,Conception Bay,)			PREFERED (see comment) Date=Product Introduction	AVAILABLE (see comment) Date=Transition to Available	MATURE (see comment) Date=Withdrawn from Sale	LIFE TIME (see comment) Date=Transition to Lifetime	Projected obsolete Date=No longer Repairable
			ARROW ----> INDICATES NO IDENTIFIED TRANSITION DATE TO THE NEXT PHASE				
	I/A Series Hardware						
Product Number	Control Stations						
P0926CP	ZCP270 Control Processor	26	Feb-05		Jun-15	Jan-18	Jan-23 -------->
Product Number	Foxboro Evo Control Stations						
P0917YZ	FCP270 Control Processor	8	Feb-05		Jun-14	Oct-17	Jan-23 -------->
Product Number	Foxboro Evo I/O Subsystems						
RH914TD	FBM207 Channel Isolated 16 DIN Voltage Monitor	1			Jun-15	-------->	
Product Number	I/O Subsystems						
P0914WH	FBM207b Ch Isolated 16 DIN 24 Vdc Contact Sense	1	< Jan-99			-------->	
P0914TR	FBM217, Discrete Inputs, 32 Channels	7	< Jan-99			-------->	
P0914XS	FBM237 Channel Isolated 8 Output 0-20 mA	4	< Jan-99			-------->	
P0914TG	FBM241 Ch Isolated Vmon DI + External Source DO	1	< Jan-99			-------->	
P0914SQ	FBM201 Channel Isolated 8 Input 0-20 mA	20	< Jan-99			-------->	
P0914TD	FBM207 Channel Isolated 16 DIN Voltage Monitor	51	< Jan-99			-------->	
P0916TA	FBM242 Channel Isolated External Source DO	56	May-00			-------->	
P0917GY	FBM207c Ch Isolated 16 DIN 48 Vdc Contact Sense	4	Aug-00			-------->	
P0918PQ	DCS FBM, WBO09A	27	Jul-01			-------->	
P0918KX	DCS FBM, WAO37A	67	Jul-01			-------->	
P0918LP	DCS FBM, WAV02A	115	Jul-01			-------->	
P0918MF	DCS FBM, WAW01E	99	Jul-01			-------->	
P0918PT	DCS FBM, WCI07A	137	Jul-01			-------->	
P0918TN	DCS FBM, WRO09A	28	Jul-01			-------->	
P0918TR	DCS FBM, WRT03A	21	Jul-01			-------->	
P0918TT	DCS FBM, WRT03B	53	Jul-01			-------->	
P0918UH	DCS FBM, WTO09	33	Jul-01			-------->	
P0918MA	DCS FBM, WAW01C	3	Dec-01			-------->	
P0926GG	FBM224, 4 Modbus Channels	1	Jan-03	Jan-05	Jan-13	Jan-23	-------->
P0918SX	DCS FBM, WPA06A	2	May-03			-------->	
P0918RK	DCS FBM, WRO09B	7	Nov-03			-------->	
P0918MD	DCS FBM, WAW01D	9	Nov-03			-------->	
P0918NQ	DCS FBM, WID07G	18	Sep-04			-------->	
P0926GS	FCM100Et, Field Comm Mod w/Fiber Optic & TDR	56	Feb-05		Jun-14	Jan-18	Jan-28
P0926GU	FBM230, Four Serial Ports, Single	1	Feb-05			Feb-18	Feb-25 >
P0926GW	FBM232, 10/100 Mbps Ethernet, Single	2	Feb-05			Feb-18	Feb-25 >
P0918MV	DCS FBM, WAX01B	17	Apr-05			-------->	
Product Number	Networking Components						
P0973BJ	Fiber E'net Switch w/24 MT-RJ Ports & Uplink Ports	4		Aug-06	Oct-09 Apr-11	Apr-16	
P0973BL	24 SFP Port Switch superseded by P0973HA	2		Sep-06	Feb-10	Feb-15 Feb-16	
P0973JN	24-Port Fiber Managed Switch	6			Feb-11	Jul-16	Dec-18 Feb-23 -------->
Product Number	Windows Workstations						
P0924TW	P92 Style M, Rev A, B, C, D Workstation	8			Sep-10 Aug-11	Aug-14 Oct-16	
P0928DA	H92 Workstation for Windows; Style A, B	5			Aug-11	Feb-13 Feb-16	-------->
P0928KA	H92 Workstation for Windows; Style G, H	4				May-14 Jan-16	Jan-19 -------->
P0928MC	H90 Style F; V90 Style E Remanufactured WS Server	1				Apr-15 Jun-15	Jun-18 -------->

Current System Architecture

COMPONENT TYPE	CURRENT SYSTEM ARCHITECTURE
Operating System	Windows 7; Server 2008
Workstations	(1) H90F; (9) H92B-H; (8) P92M
Control Processors	(8) FCP280; (26) ZCP270
Integrators	FBM230, FBM233

Upgrade Path

Upgrade phase will address immediate needs of the system to relating to obsolescence and lifetime component issues.

- SWC301, SWC302, SWC203, SWC205, SWC501 and SWC502 switches are in the Obsolete Phase. It is recommended to upgrade to our current model. Replacing the switches before a failure may reduce costly downtime and replacing them in a planned shutdown will reduce risk.

- Several of the Windows Operator Workstations are in the Lifetime and Obsolete Phases. It is recommended to upgrade to our latest station offerings which will be connected to the Mesh and will operate with our latest Foxboro Evo software version. Replacing the workstation before a failure will reduce costly downtime and it will be discounted at Advantage price.

- Preparing for Windows 7 and Server 2008 R2 End of Life starts now as both operating systems are on extended support. There will be no more security updates, updates, or technical support after January 14, 2020. From this point forward, businesses using Windows 10 & Server 2016 will remain up-to-date with the latest fixes and updates. Windows as a Service (WaaS) assures a smooth transition between iterations of a single operating system. Windows 10 and Server 2016 may look completely different ten years from now, but incremental updates will happen behind the scenes without a major upheaval to business systems. Control Core Services V9.4 has been qualified to run on H92 Style G/A (HP Z420 Workstation), H92 Style J/A (HP Z440 Workstation), H90 Style G/A (HP DL380 Gen 9 Server) and V91 Style A/A (HP DL380 Gen9).

CURRENT ARCHITECTURE DRAWINGS



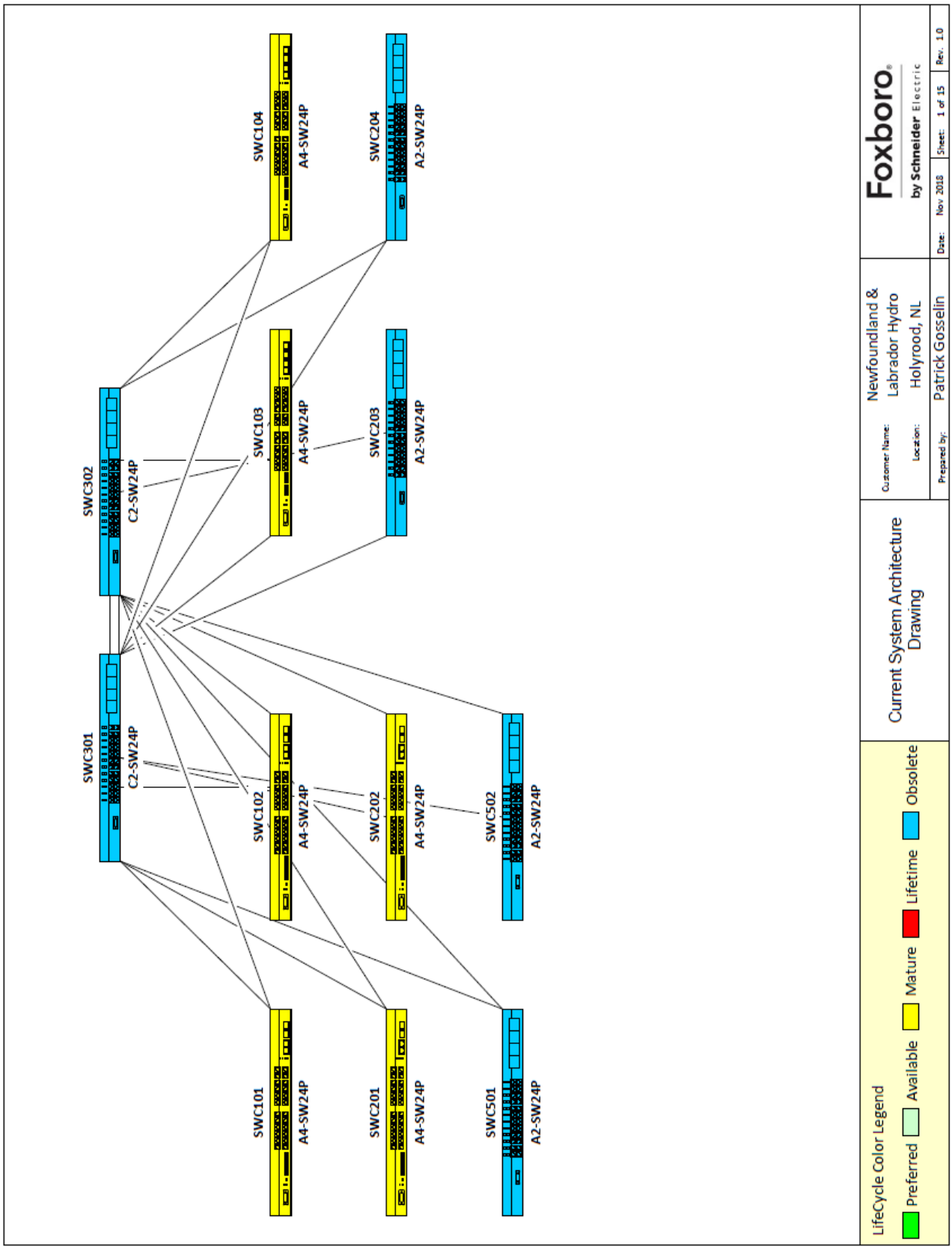
SWC301
C2-SW24P
SWC302
C2-SW24P
SWC101
A4-SW24P
SWC102
A4-SW24P
SWC103
A4-SW24P
SWC104
A4-SW24P
SWC201
A4-SW24P
SWC202
A4-SW24P
SWC203
A2-SW24P
SWC204
A2-SW24P
SWC501
A2-SW24P
SWC502
A2-SW24P
LifeCycle Color Legend
Preferred
Available
Mature
Lifetime
Obsolete
Current System Architecture Drawing
Customer Name: Newfoundland & Labrador Hydro
Location: Holyrood, NL
Prepared by: Patrick Gosselin
Date: Nov 2018
Sheet: 1 of 15
Rev. 1.0
Foxboro
by Schneider Electric

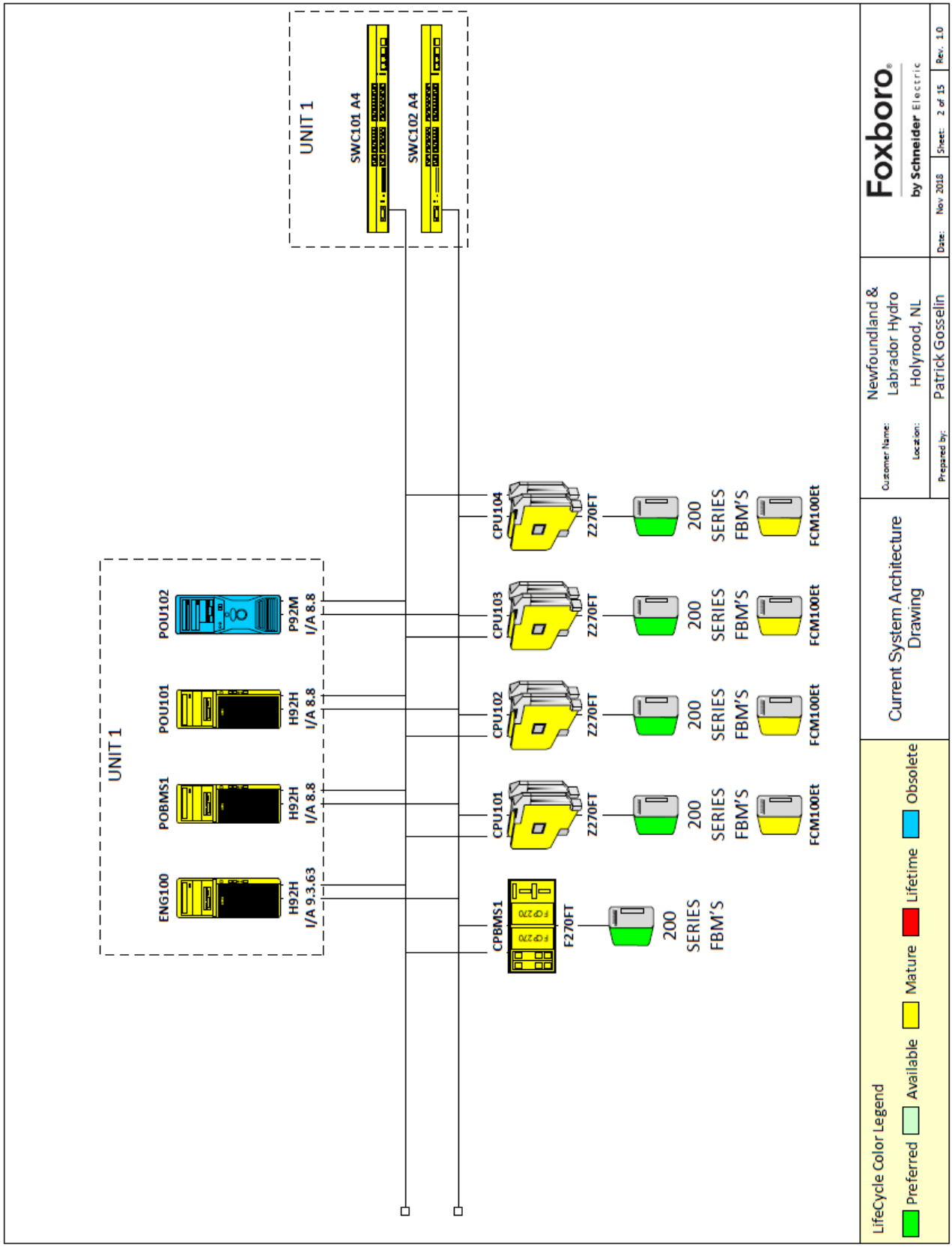
UNIT 1
SWC101 A4
SWC102 A4
UNIT 1
POU102
P92M
I/A 8.8
POU101
H92H
I/A 8.8
POBMS1
H92H
I/A 8.8
ENG100
H92H
I/A 9.3.63
CPU104
Z270FT
CPU103
Z270FT
CPU102
Z270FT
CPU101
Z270FT
CPBMS1
F270FT
200 SERIES FBM'S
FCM100Et
Foxboro
by Schneider Electric
Customer Name: Newfoundland & Labrador Hydro
Location: Holyrood, NL
Prepared by: Patrick Gosselin
Date: Nov 2018
Sheet: 2 of 15
Rev. 1.0
Current System Architecture Drawing
LifeCycle Color Legend
Preferred
Available
Mature
Lifetime
Obsolete

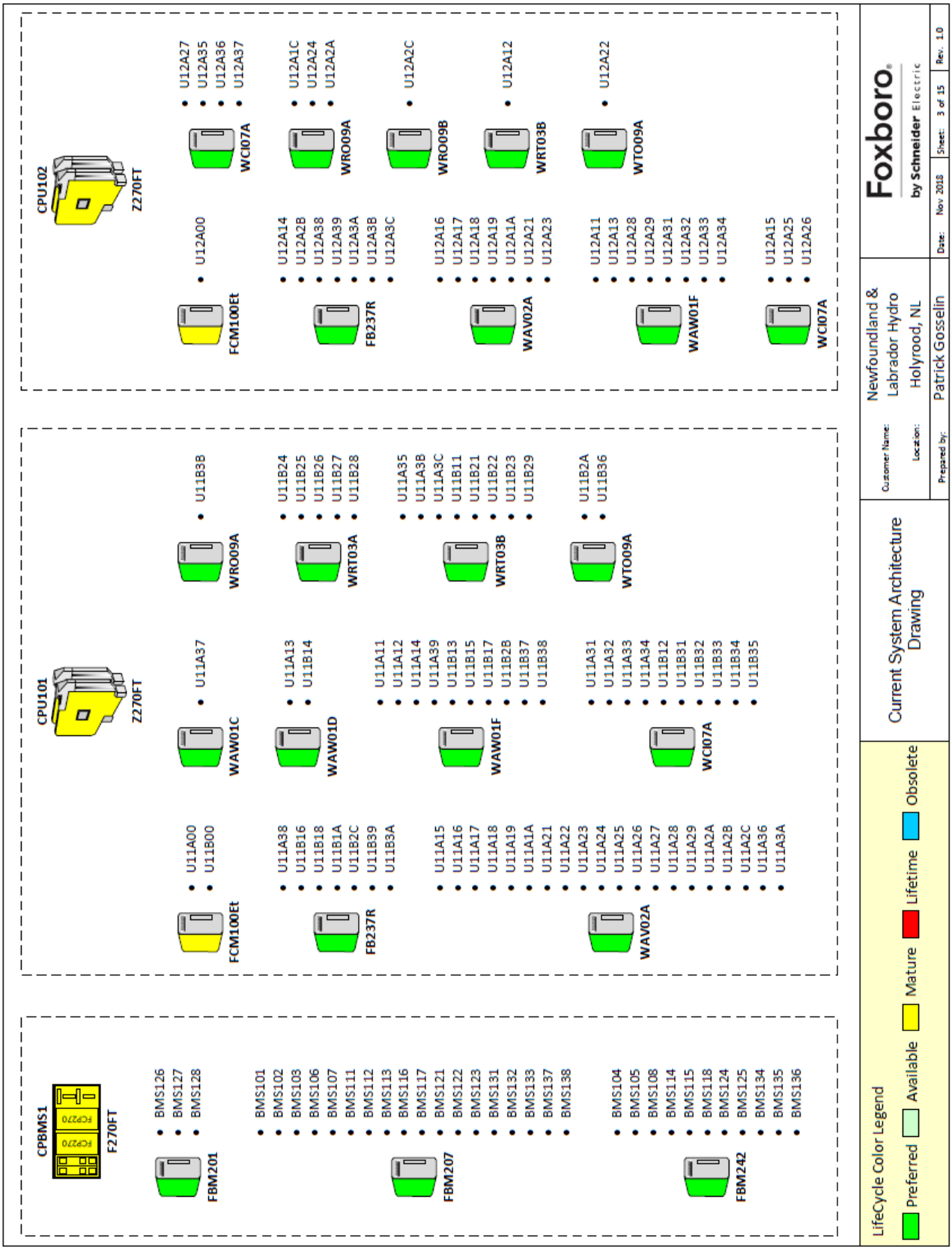
CPU102
Z270FT
U12A27
U12A35
U12A36
U12A37
WCI07A
U12A1C
U12A24
U12A2A
WRO09A
U12A2C
WRO09B
U12A12
WRT03B
U12A22
WTO09A
U12A00
FCM100Et
U12A14
U12A2B
U12A38
U12A39
U12A3A
U12A3B
U12A3C
FB237R
U12A16
U12A17
U12A18
U12A19
U12A1A
U12A21
U12A23
WAV02A
U12A11
U12A13
U12A28
U12A29
U12A31
U12A32
U12A33
U12A34
WAW01F
U12A15
U12A25
U12A26
WCI07A
CPU101
Z270FT
U11B3B
WRO09A
U11B24
U11B25
U11B26
U11B27
U11B28
WRT03A
U11A35
U11A3B
U11A3C
U11B11
U11B21
U11B22
U11B23
U11B29
WRT03B
U11B2A
U11B36
WTO09A
U11A37
WAW01C
U11A13
U11B14
WAW01D
U11A11
U11A12
U11A14
U11A39
U11B13
U11B15
U11B17
U11B2B
U11B37
U11B38
WAW01F
U11A31
U11A32
U11A33
U11A34
U11B12
U11B31
U11B32
U11B33
U11B34
U11B35
WCI07A
U11A00
U11B00
FCM100Et
U11A38
U11B16
U11B18
U11B1A
U11B2C
U11B39
U11B3A
FB237R
U11A15
U11A16
U11A17
U11A18
U11A19
U11A1A
U11A21
U11A22
U11A23
U11A24
U11A25
U11A26
U11A27
U11A28
U11A29
U11A2A
U11A2B
U11A2C
U11A36
U11A3A
WAV02A
CPBMS1
F270FT
FCP270
FCP270
BMS126
BMS127
BMS128
FBM201
BMS101
BMS102
BMS103
BMS106
BMS107
BMS111
BMS112
BMS113
BMS116
BMS117
BMS121
BMS122
BMS123
BMS131
BMS132
BMS133
BMS137
BMS138
FBM207
BMS104
BMS105
BMS108
BMS114
BMS115
BMS118
BMS124
BMS125
BMS134
BMS135
BMS136
FBM242
LifeCycle Color Legend
Preferred
Available
Mature
Lifetime
Obsolete
Current System Architecture Drawing
Customer Name:
Location:
Prepared by:
Newfoundland & Labrador Hydro
Holyrood, NL
Patrick Gosselin
Date:
Nov 2018
Sheet:
3 of 15
Rev. 1.0
Foxboro
by Schneider Electric

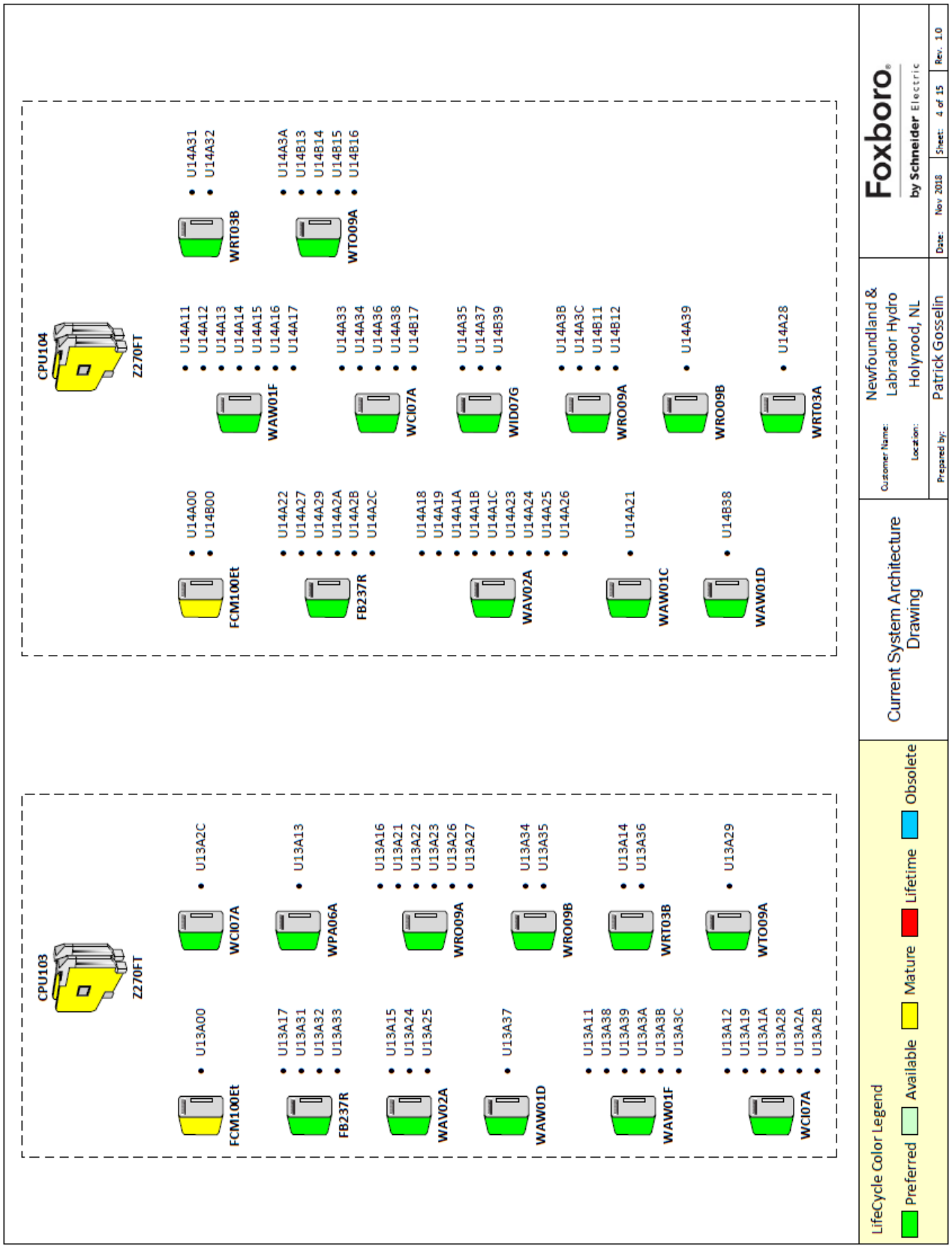
CPU104
Z270FT
U14A31
U14A32
WRT03B
U14A3A
U14B13
U14B14
U14B15
U14B16
WTO09A
U14A11
U14A12
U14A13
U14A14
U14A15
U14A16
U14A17
WAW01F
U14A33
U14A34
U14A36
U14A38
U14B17
WCI07A
U14A35
U14A37
U14B39
WID07G
U14A3B
U14A3C
U14B11
U14B12
WRO09A
U14A39
WRO09B
U14A28
WRT03A
U14A00
U14B00
FCM100Et
U14A22
U14A27
U14A29
U14A2A
U14A2B
U14A2C
FB237R
U14A18
U14A19
U14A1A
U14A1B
U14A1C
U14A23
U14A24
U14A25
U14A26
WAV02A
U14A21
WAW01C
U14B38
WAW01D
CPU103
Z270FT
U13A2C
WCI07A
U13A13
WPA06A
U13A16
U13A21
U13A22
U13A23
U13A26
U13A27
WRO09A
U13A34
U13A35
WRO09B
U13A14
U13A36
WRT03B
U13A29
WTO09A
U13A00
FCM100Et
U13A17
U13A31
U13A32
U13A33
FB237R
U13A15
U13A24
U13A25
WAV02A
U13A37
WAW01D
U13A11
U13A38
U13A39
U13A3A
U13A3B
U13A3C
WAW01F
U13A12
U13A19
U13A1A
U13A28
U13A2A
U13A2B
WCI07A
LifeCycle Color Legend
Preferred
Available
Mature
Lifetime
Obsolete
Current System Architecture Drawing
Customer Name: Newfoundland & Labrador Hydro
Location: Holyrood, NL
Prepared by: Patrick Gosselin
Date: Nov 2018
Sheet: 4 of 15
Rev. 1.0
Foxboro
by Schneider Electric

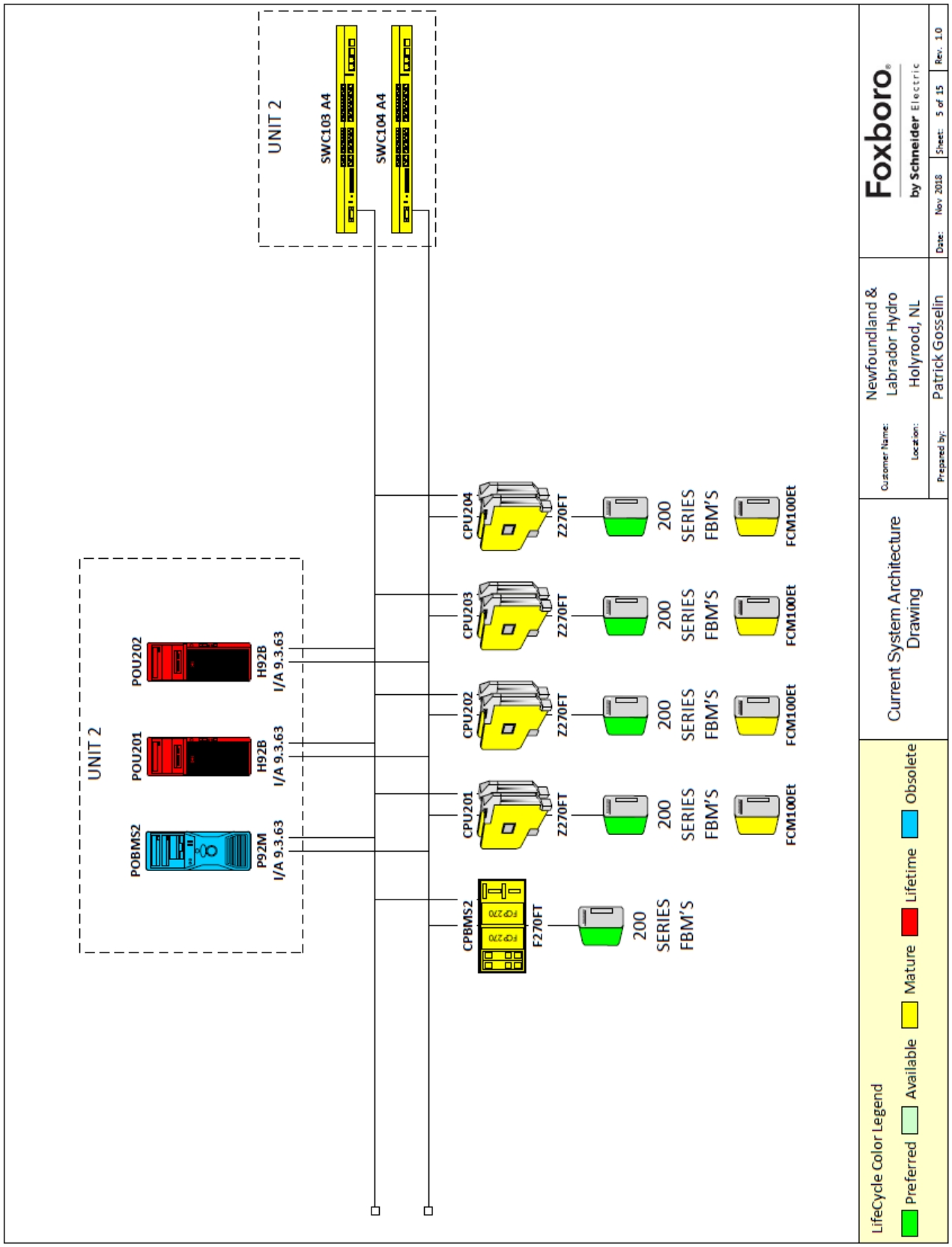
UNIT 2
SWC103 A4
SWC104 A4
UNIT 2
POU202
H92B
I/A 9.3.63
POU201
H92B
I/A 9.3.63
POBMS2
P92M
I/A 9.3.63
CPU204
Z270FT
200 SERIES FBM'S
FCM100Et
CPU203
Z270FT
200 SERIES FBM'S
FCM100Et
CPU202
Z270FT
200 SERIES FBM'S
FCM100Et
CPU201
Z270FT
200 SERIES FBM'S
FCM100Et
CPBMS2
FP 270
FP 270
F270FT
200 SERIES FBM'S
Foxboro
by Schneider Electric
Customer Name: Newfoundland & Labrador Hydro
Location: Holyrood, NL
Prepared by: Patrick Gosselin
Date: Nov 2018
Sheet: 5 of 15
Rev. 1.0
Current System Architecture Drawing
LifeCycle Color Legend
Preferred
Available
Mature
Lifetime
Obsolete

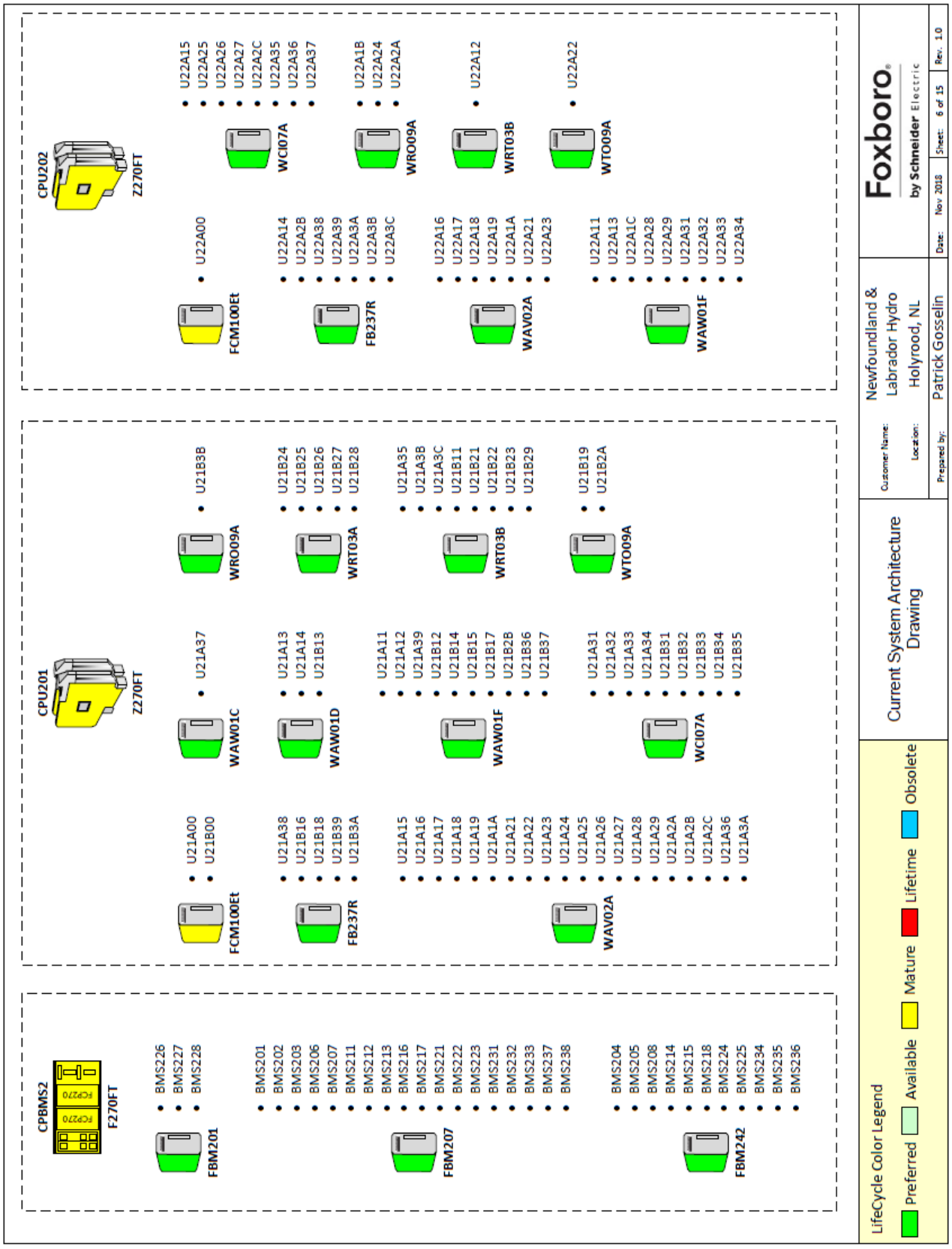
CPU202
Z270FT
U22A15
U22A25
U22A26
U22A27
U22A2C
U22A35
U22A36
U22A37
WCI07A
U22A1B
U22A24
U22A2A
WRO09A
U22A12
WRT03B
U22A22
WTO09A
U22A00
FCM100Et
U22A14
U22A2B
U22A38
U22A39
U22A3A
U22A3B
U22A3C
FB237R
U22A16
U22A17
U22A18
U22A19
U22A1A
U22A21
U22A23
WAV02A
U22A11
U22A13
U22A1C
U22A28
U22A29
U22A31
U22A32
U22A33
U22A34
WAW01F
CPU201
Z270FT
U21B3B
WRO09A
U21B24
U21B25
U21B26
U21B27
U21B28
WRT03A
U21A35
U21A3B
U21A3C
U21B11
U21B21
U21B22
U21B23
U21B29
WRT03B
U21B19
U21B2A
WTO09A
U21A37
WAW01C
U21A13
U21A14
U21B13
WAW01D
U21A11
U21A12
U21A39
U21B12
U21B14
U21B15
U21B17
U21B2B
U21B36
U21B37
WAW01F
U21A31
U21A32
U21A33
U21A34
U21B31
U21B32
U21B33
U21B34
U21B35
WCI07A
U21A00
U21B00
FCM100Et
U21A38
U21B16
U21B18
U21B39
U21B3A
FB237R
U21A15
U21A16
U21A17
U21A18
U21A19
U21A1A
U21A21
U21A22
U21A23
U21A24
U21A25
U21A26
U21A27
U21A28
U21A29
U21A2A
U21A2B
U21A2C
U21A36
U21A3A
WAV02A
CPBMS2
F270FT
FCP270
FCP270
BMS226
BMS227
BMS228
FBM201
BMS201
BMS202
BMS203
BMS206
BMS207
BMS211
BMS212
BMS213
BMS216
BMS217
BMS221
BMS222
BMS223
BMS231
BMS232
BMS233
BMS237
BMS238
FBM207
BMS204
BMS205
BMS208
BMS214
BMS215
BMS218
BMS224
BMS225
BMS234
BMS235
BMS236
FBM242
LifeCycle Color Legend
Preferred
Available
Mature
Lifetime
Obsolete
Current System Architecture Drawing
Customer Name:
Location:
Newfoundland & Labrador Hydro
Holyrood, NL
Prepared by:
Patrick Gosselin
Date:
Nov 2018
Sheet:
6 of 15
Rev. 1.0
Foxboro
by Schneider Electric

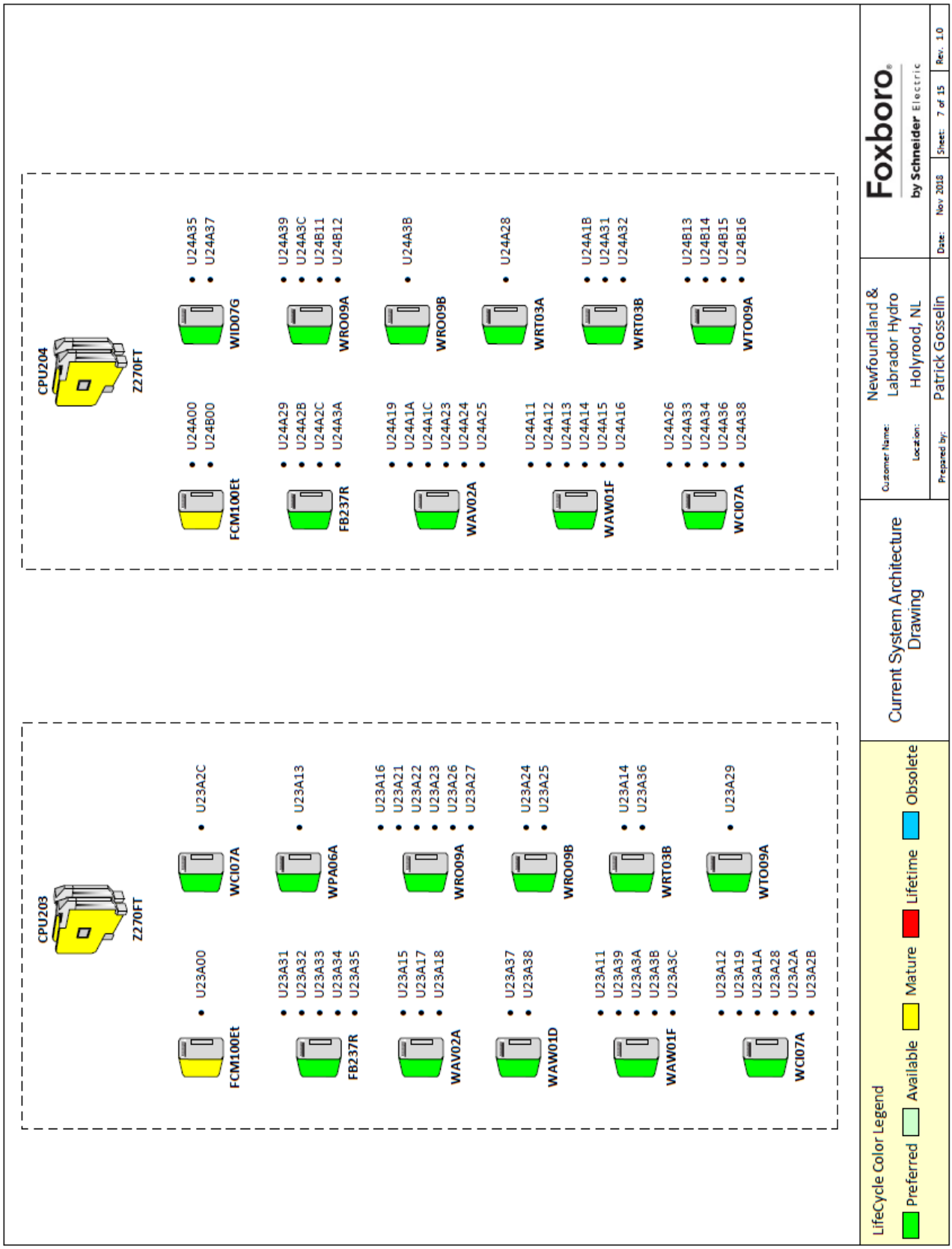
CPU204
Z270FT
U24A35
U24A37
WID07G
U24A00
U24B00
FCM100Et
U24A39
U24A3C
U24B11
U24B12
WRO09A
U24A29
U24A2B
U24A2C
U24A3A
FB237R
U24A3B
WRO09B
U24A19
U24A1A
U24A1C
U24A23
U24A24
U24A25
WAV02A
U24A28
WRT03A
U24A11
U24A12
U24A13
U24A14
U24A15
U24A16
WAW01F
U24A1B
U24A31
U24A32
WRT03B
U24A26
U24A33
U24A34
U24A36
U24A38
WCI07A
U24B13
U24B14
U24B15
U24B16
WTO09A
CPU203
Z270FT
U23A2C
WCI07A
U23A00
U23A31
U23A32
U23A33
U23A34
U23A35
FCM100Et
U23A13
WPA06A
FB237R
U23A16
U23A21
U23A22
U23A23
U23A26
U23A27
WRO09A
U23A15
U23A17
U23A18
WAV02A
U23A24
U23A25
WRO09B
U23A37
U23A38
WAW01D
U23A14
U23A36
WRT03B
U23A11
U23A39
U23A3A
U23A3B
U23A3C
WAW01F
U23A29
WTO09A
U23A12
U23A19
U23A1A
U23A28
U23A2A
U23A2B
WCI07A
Foxboro
by Schneider Electric
Customer Name: Newfoundland & Labrador Hydro
Location: Holyrood, NL
Prepared by: Patrick Gosselin
Date: Nov 2018
Sheet: 7 of 15
Rev. 1.0
Current System Architecture Drawing
LifeCycle Color Legend
Preferred
Available
Mature
Lifetime
Obsolete

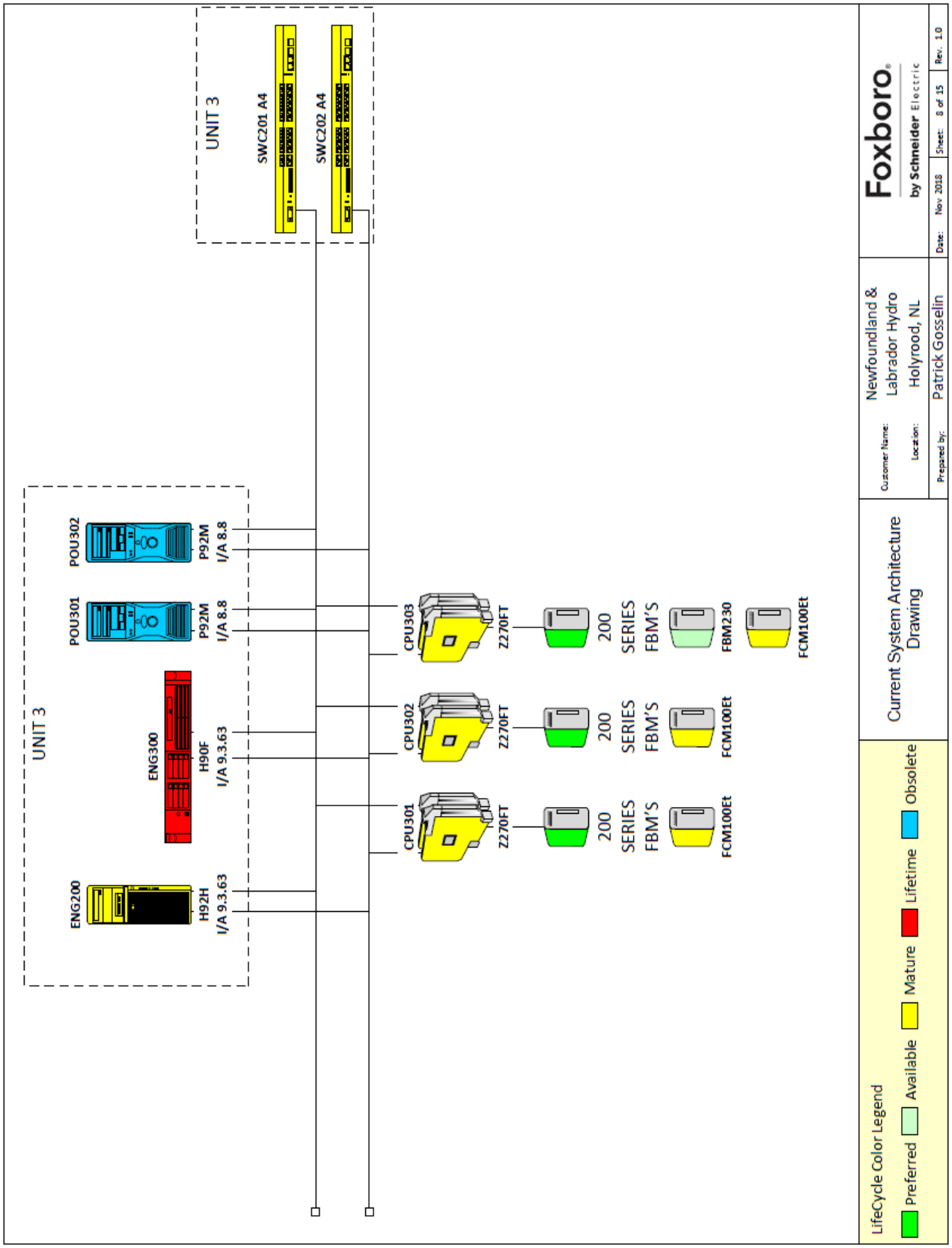
UNIT 3
SWC201 A4
SWC202 A4
UNIT 3
POU302
P92M
I/A 8.8
POU301
P92M
I/A 8.8
ENG300
H90F
I/A 9.3.63
ENG200
H92H
I/A 9.3.63
CPU303
Z270FT
CPU302
Z270FT
CPU301
Z270FT
200 SERIES FBM'S
FBM230
FCM100Et
FCM100Et
FCM100Et
Foxboro
by Schneider Electric
Customer Name: Newfoundland & Labrador Hydro
Location: Holyrood, NL
Prepared by: Patrick Gosselin
Date: Nov 2018
Sheet: 8 of 15
Rev. 1.0
Current System Architecture Drawing
LifeCycle Color Legend
Preferred
Available
Mature
Lifetime
Obsolete

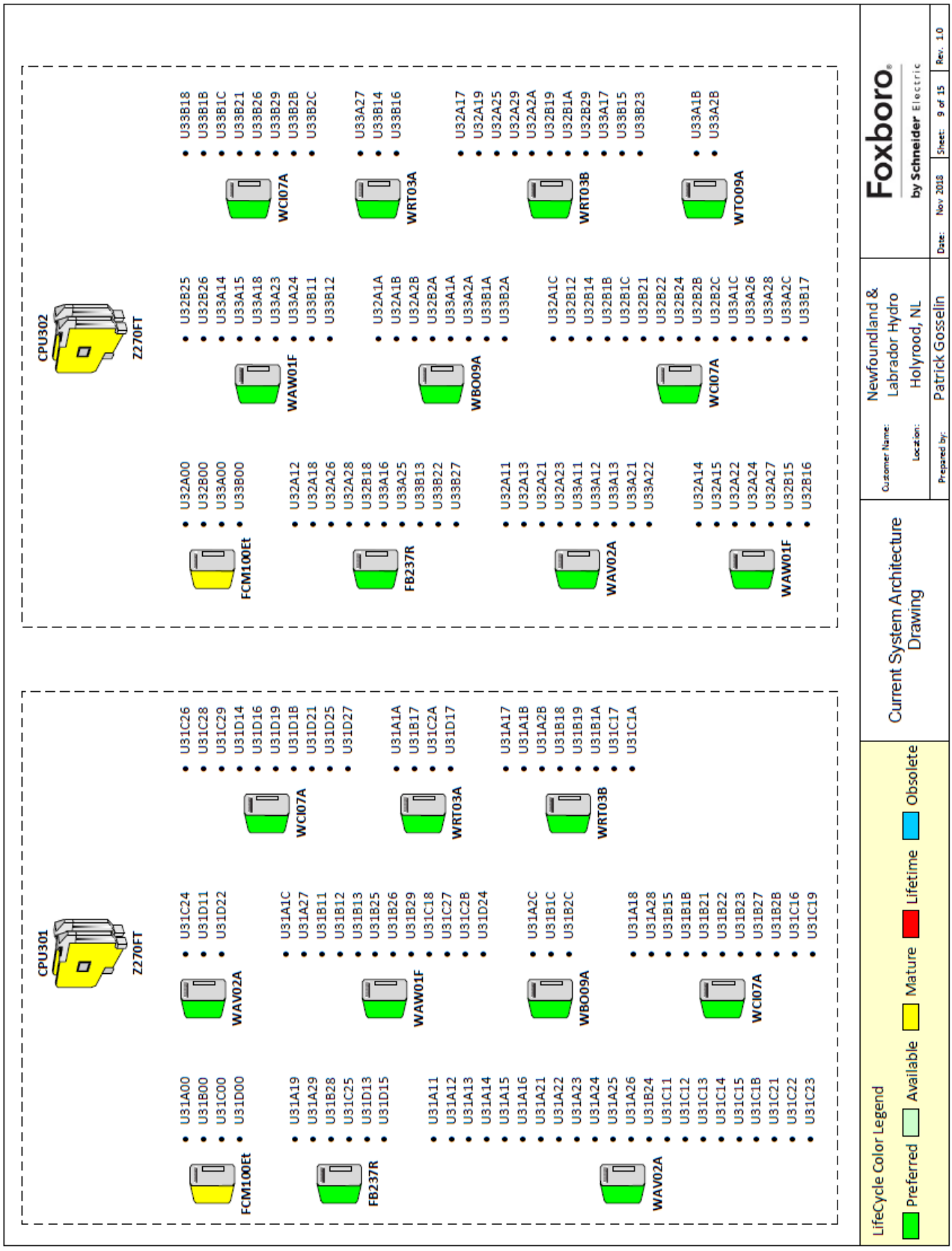
CPU301
Z270FT
FCM100Et
U31A00 U31B00 U31C00 U31D00
WAV02A
U31C24 U31D11 U31D22
FB237R
U31A19 U31A29 U31B28 U31C25 U31D13 U31D15
WAW01F
U31A11 U31A12 U31A13 U31A14 U31A15 U31A16 U31A21 U31A22 U31A23 U31A24 U31A25 U31A26 U31B24 U31C11 U31C12 U31C13 U31C14 U31C15 U31C1B U31C21 U31C22 U31C23
WAV02A
U31A18 U31A28 U31B15 U31B1B U31B21 U31B22 U31B23 U31B27 U31B2B U31C16 U31C19
WCI07A
U31A1C U31A27 U31B11 U31B12 U31B13 U31B25 U31B26 U31B29 U31C18 U31C27 U31C2B U31D24
WRT03A
U31C26 U31C28 U31C29 U31D14 U31D16 U31D19 U31D1B U31D21 U31D25 U31D27
WAW01F
U31A1A U31B17 U31C2A U31D17
WBO09A
U31A2C U31B1C U31B2C
WRT03B
U31A17 U31A1B U31A2B U31B18 U31B19 U31B1A U31C17 U31C1A
CPU302
Z270FT
FCM100Et
U32A00 U32B00 U33A00 U33B00
WAW01F
U32B25 U32B26 U33A14 U33A15 U33A18 U33A23 U33A24 U33B11 U33B12
WCI07A
U33B18 U33B1B U33B1C U33B21 U33B26 U33B29 U33B2B U33B2C
FB237R
U32A12 U32A18 U32A26 U32A28 U32B18 U33A16 U33A25 U33B13 U33B22 U33B27
WBO09A
U32A1A U32A1B U32A2B U32B2A U33A1A U33A2A U33B1A U33B2A
WRT03A
U33A27 U33B14 U33B16
WAV02A
U32A11 U32A13 U32A21 U32A23 U33A11 U33A12 U33A13 U33A21 U33A22
WCI07A
U32A1C U32B12 U32B14 U32B1B U32B1C U32B21 U32B22 U32B24 U32B2B U32B2C U33A1C U33A26 U33A28 U33B17
WRT03B
U32A17 U32A19 U32A25 U32A29 U32A2A U32B19 U32B1A U32B29 U33A17 U33B15 U33B23
WAW01F
U32A14 U32A15 U32A22 U32A24 U32A27 U32B15 U32B16
WTO09A
U33A1B U33A2B
LifeCycle Color Legend
Preferred
Available
Mature
Lifetime
Obsolete
Current System Architecture Drawing
Customer Name: Newfoundland & Labrador Hydro
Location: Holyrood, NL
Prepared by: Patrick Gosselin
Date: Nov 2018
Sheet: 9 of 15
Rev. 1.0
Foxboro
by Schneider Electric

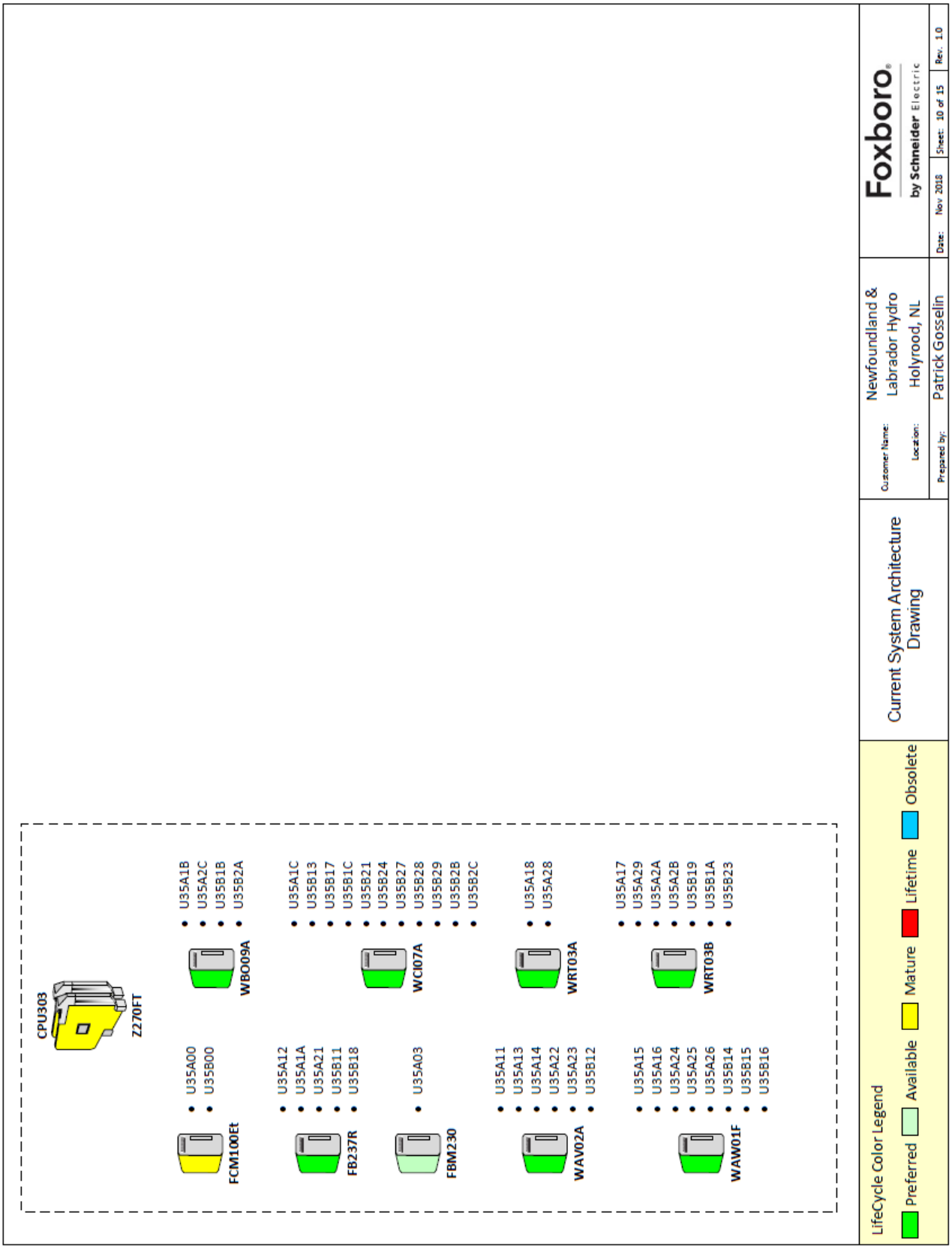
CPU303
Z270FT
U35A1B
U35A2C
U35B1B
U35B2A
WBO09A
U35A1C
U35B13
U35B17
U35B1C
U35B21
U35B24
U35B27
U35B28
U35B29
U35B2B
U35B2C
WCI07A
U35A18
U35A28
WRT03A
U35A17
U35A29
U35A2A
U35A2B
U35B19
U35B1A
U35B23
WRT03B
U35A00
U35B00
FCM100Et
U35A12
U35A1A
U35A21
U35B11
U35B18
FB237R
U35A03
FBM230
U35A11
U35A13
U35A14
U35A22
U35A23
U35B12
WAV02A
U35A15
U35A16
U35A24
U35A25
U35A26
U35B14
U35B15
U35B16
WAW01F
LifeCycle Color Legend
Preferred
Available
Mature
Lifetime
Obsolete
Current System Architecture Drawing
Customer Name:
Newfoundland & Labrador Hydro
Location:
Holyrood, NL
Prepared by:
Patrick Gosselin
Date:
Nov 2018
Sheet:
10 of 15
Rev. 1.0
Foxboro
by Schneider Electric

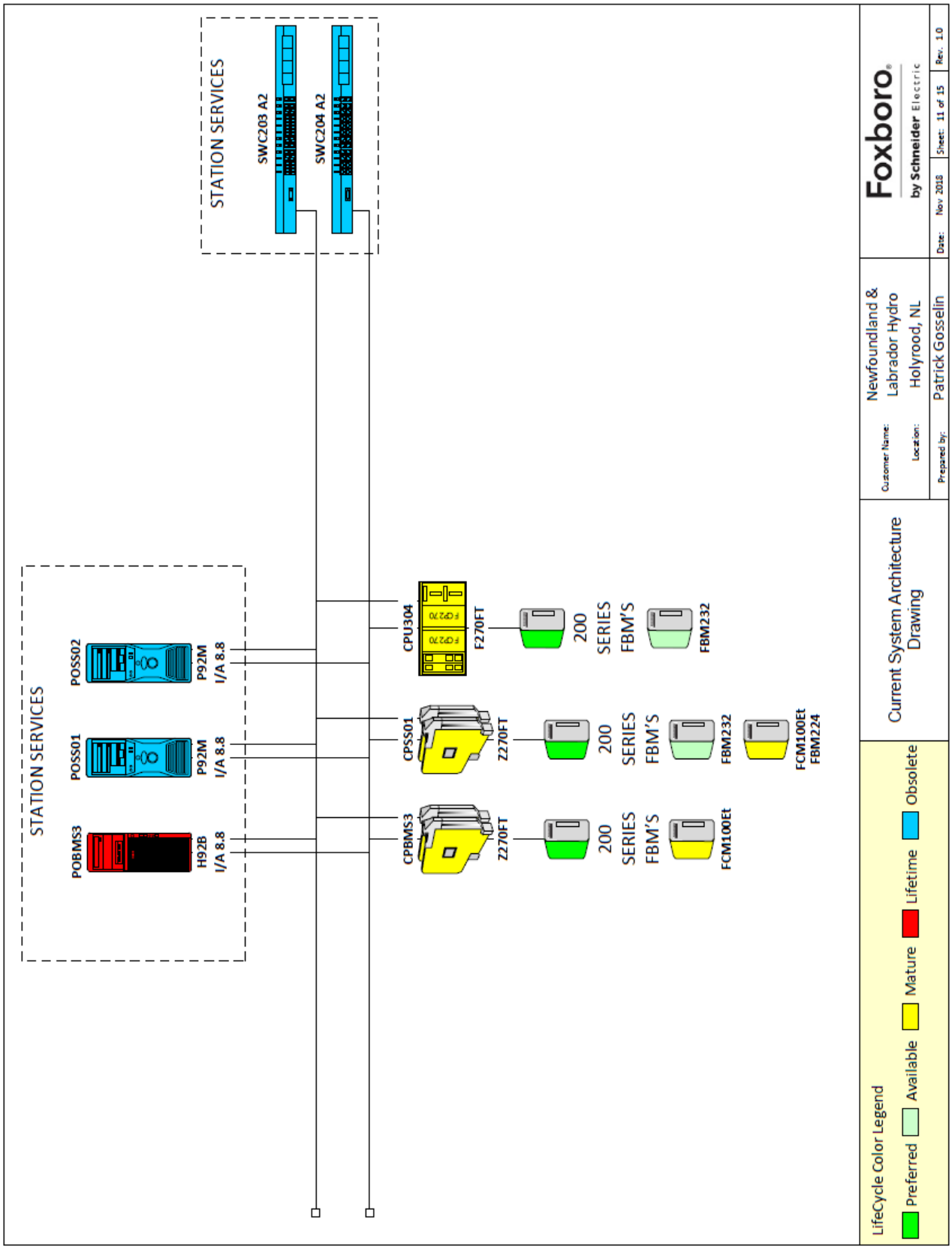
STATION SERVICES
SWC203 A2
SWC204 A2
STATION SERVICES
POSS02
P92M
I/A 8.8
POSS01
P92M
I/A 8.8
POBMS3
H92B
I/A 8.8
CPU304
F270FT
200 SERIES FBM'S
FBM232
CPSS01
Z270FT
200 SERIES FBM'S
FBM232
FCM100Et
FBM224
CPBMS3
Z270FT
200 SERIES FBM'S
FCM100Et
LifeCycle Color Legend
Preferred
Available
Mature
Lifetime
Obsolete
Current System Architecture Drawing
Customer Name: Newfoundland & Labrador Hydro
Location: Holyrood, NL
Prepared by: Patrick Gosselin
Date: Nov 2018
Sheet: 11 of 15
Rev. 1.0
Foxboro
by Schneider Electric

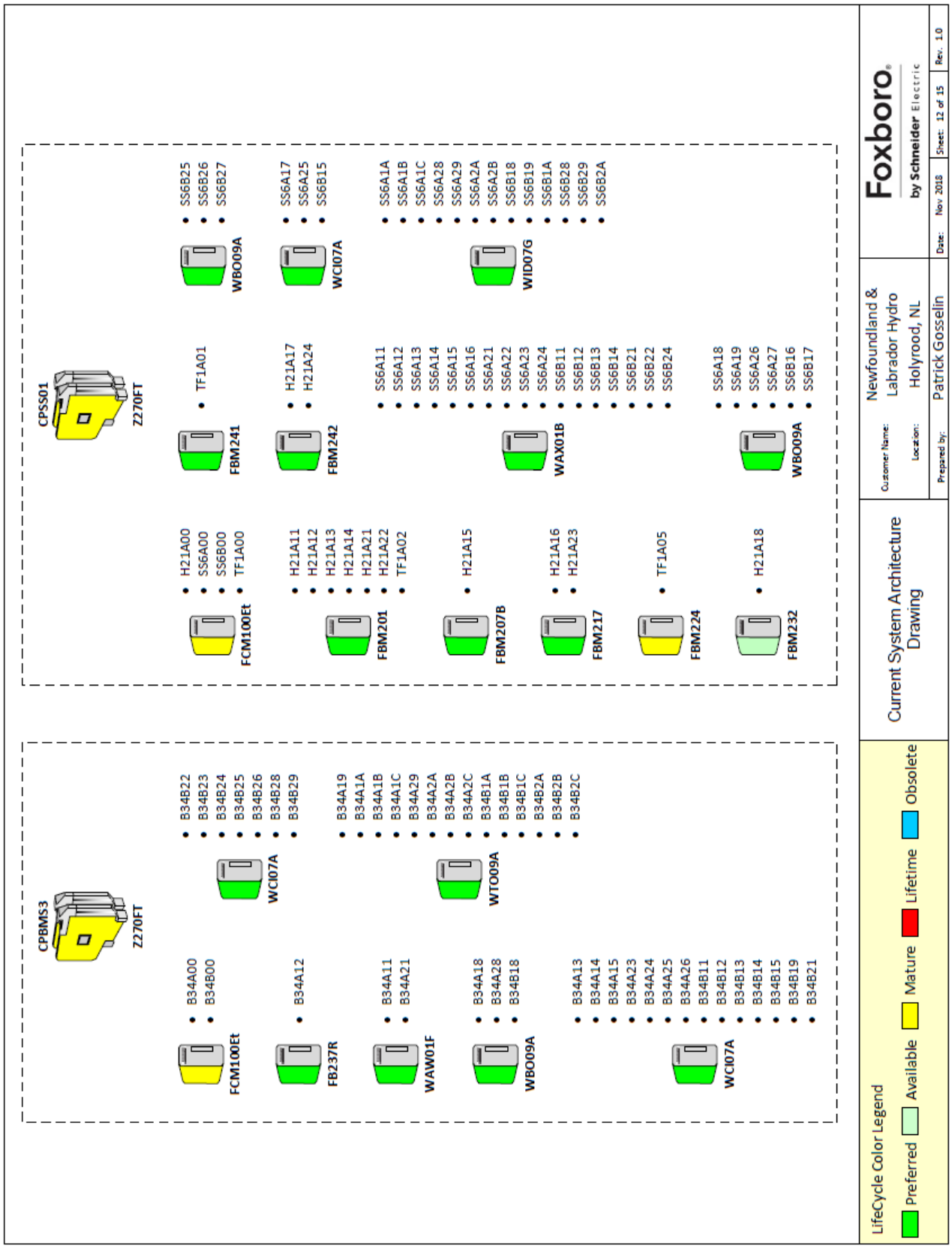
CPSS01
Z270FT
S56B25
S56B26
S56B27
WBO09A
TF1A01
FBM241
H21A17
H21A24
FBM242
WCI07A
S56A17
S56A25
S56B15
S56A1A
S56A1B
S56A1C
S56A28
S56A29
S56A2A
S56A2B
S56B18
S56B19
S56B1A
S56B28
S56B29
S56B2A
WID07G
S56A11
S56A12
S56A13
S56A14
S56A15
S56A16
S56A21
S56A22
S56A23
S56A24
S56B11
S56B12
S56B13
S56B14
S56B21
S56B22
S56B24
WAX01B
S56A18
S56A19
S56A26
S56A27
S56B16
S56B17
WBO09A
H21A00
S56A00
S56B00
TF1A00
FCM100Et
H21A11
H21A12
H21A13
H21A14
H21A21
H21A22
TF1A02
FBM201
H21A15
FBM207B
H21A16
H21A23
FBM217
TF1A05
FBM224
H21A18
FBM232
CPBMS3
Z270FT
B34B22
B34B23
B34B24
B34B25
B34B26
B34B28
B34B29
WCI07A
B34A19
B34A1A
B34A1B
B34A1C
B34A29
B34A2A
B34A2B
B34A2C
B34B1A
B34B1B
B34B1C
B34B2A
B34B2B
B34B2C
WTO09A
B34A00
B34B00
FCM100Et
B34A12
FB237R
B34A11
B34A21
WAW01F
B34A18
B34A28
B34B18
WBO09A
B34A13
B34A14
B34A15
B34A23
B34A24
B34A25
B34A26
B34B11
B34B12
B34B13
B34B14
B34B15
B34B19
B34B21
WCI07A
LifeCycle Color Legend
Preferred
Available
Mature
Lifetime
Obsolete
Current System Architecture Drawing
Customer Name:
Newfoundland & Labrador Hydro
Location:
Holyrood, NL
Prepared by:
Patrick Gosselin
Date:
Nov 2018
Sheet:
12 of 15
Rev:
1.0
Foxboro
by Schneider Electric

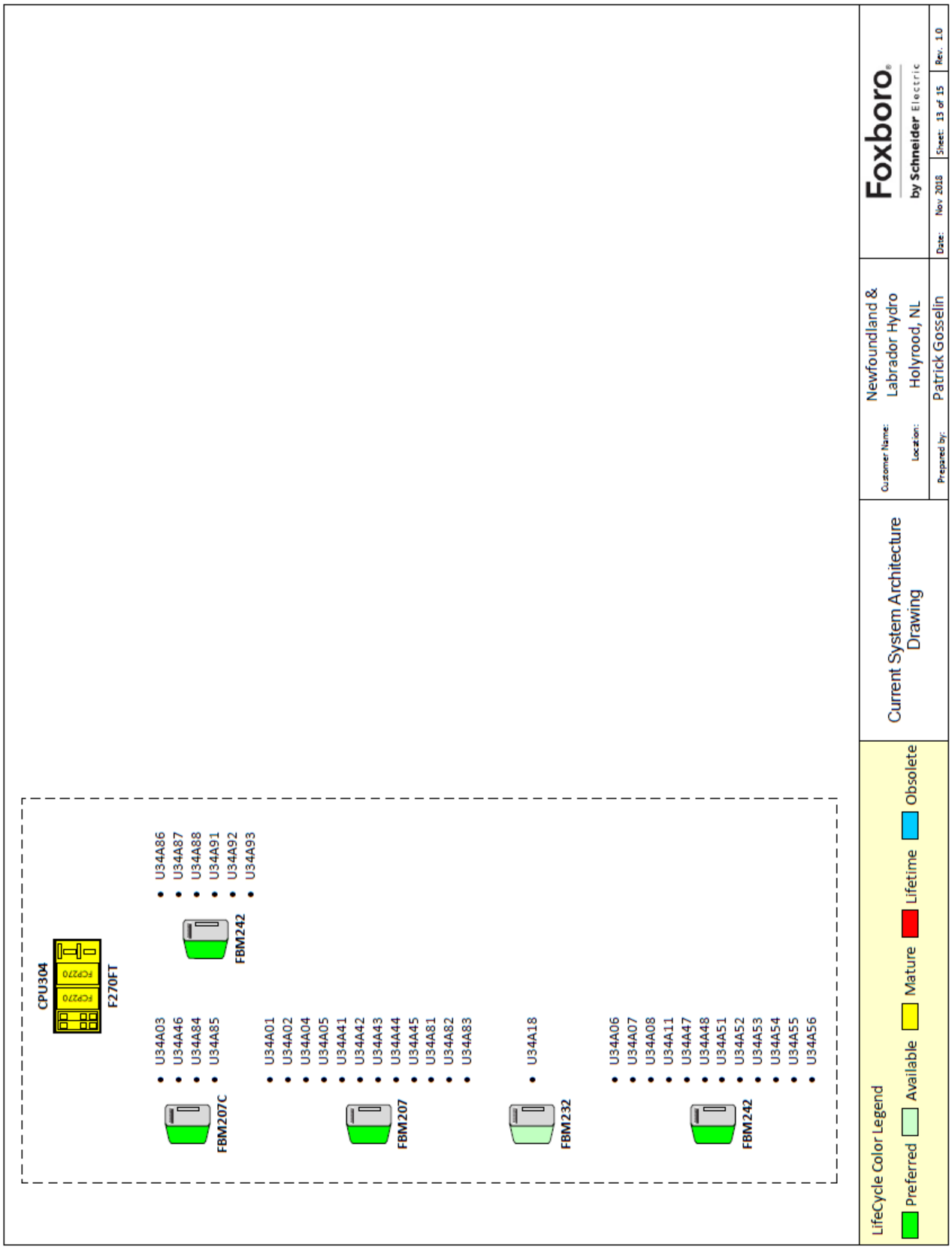
CPU304
FCP270
FCP270
F270FT
U34A86
U34A87
U34A88
U34A91
U34A92
U34A93
FBM242
U34A03
U34A46
U34A84
U34A85
FBM207C
U34A01
U34A02
U34A04
U34A05
U34A41
U34A42
U34A43
U34A44
U34A45
U34A81
U34A82
U34A83
FBM207
U34A18
FBM232
U34A06
U34A07
U34A08
U34A11
U34A47
U34A48
U34A51
U34A52
U34A53
U34A54
U34A55
U34A56
FBM242
LifeCycle Color Legend
Preferred
Available
Mature
Lifetime
Obsolete
Current System Architecture Drawing
Customer Name: Newfoundland & Labrador Hydro
Location: Holyrood, NL
Prepared by: Patrick Gosselin
Date: Nov 2018
Sheet: 13 of 15
Rev: 1.0
Foxboro
by Schneider Electric

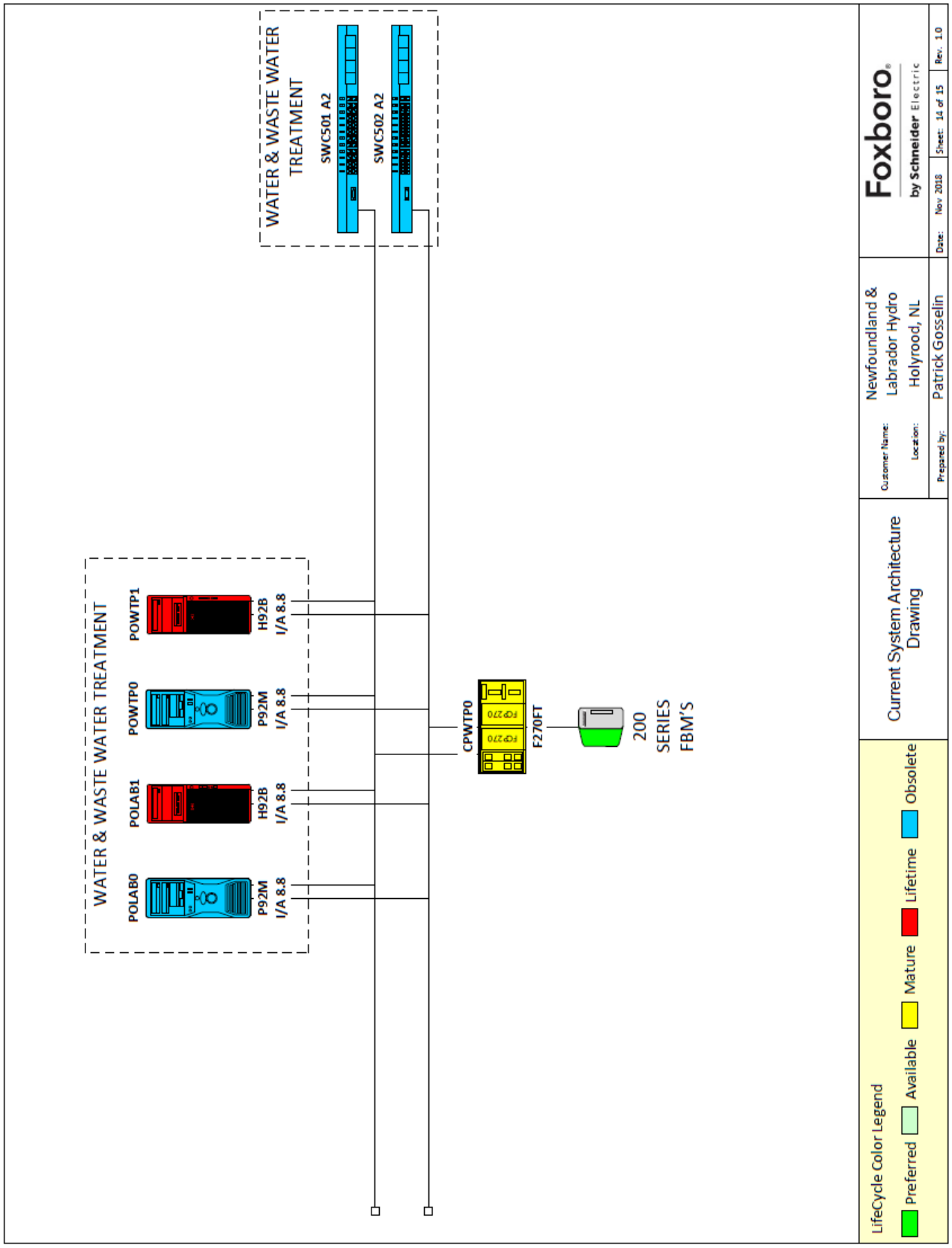
WATER & WASTE WATER TREATMENT
SWC501 A2
SWC502 A2
WATER & WASTE WATER TREATMENT
POWTP1
H92B
I/A 8.8
POWTP0
P92M
I/A 8.8
POLAB1
H92B
I/A 8.8
POLAB0
P92M
I/A 8.8
CPWTP0
FCP270
FCP270
F270FT
200 SERIES FBM'S
Foxboro
by Schneider Electric
Customer Name: Newfoundland & Labrador Hydro
Location: Holyrood, NL
Prepared by: Patrick Gosselin
Date: Nov 2018
Sheet: 14 of 15
Rev. 1.0
Current System Architecture Drawing
LifeCycle Color Legend
Preferred
Available
Mature
Lifetime
Obsolete

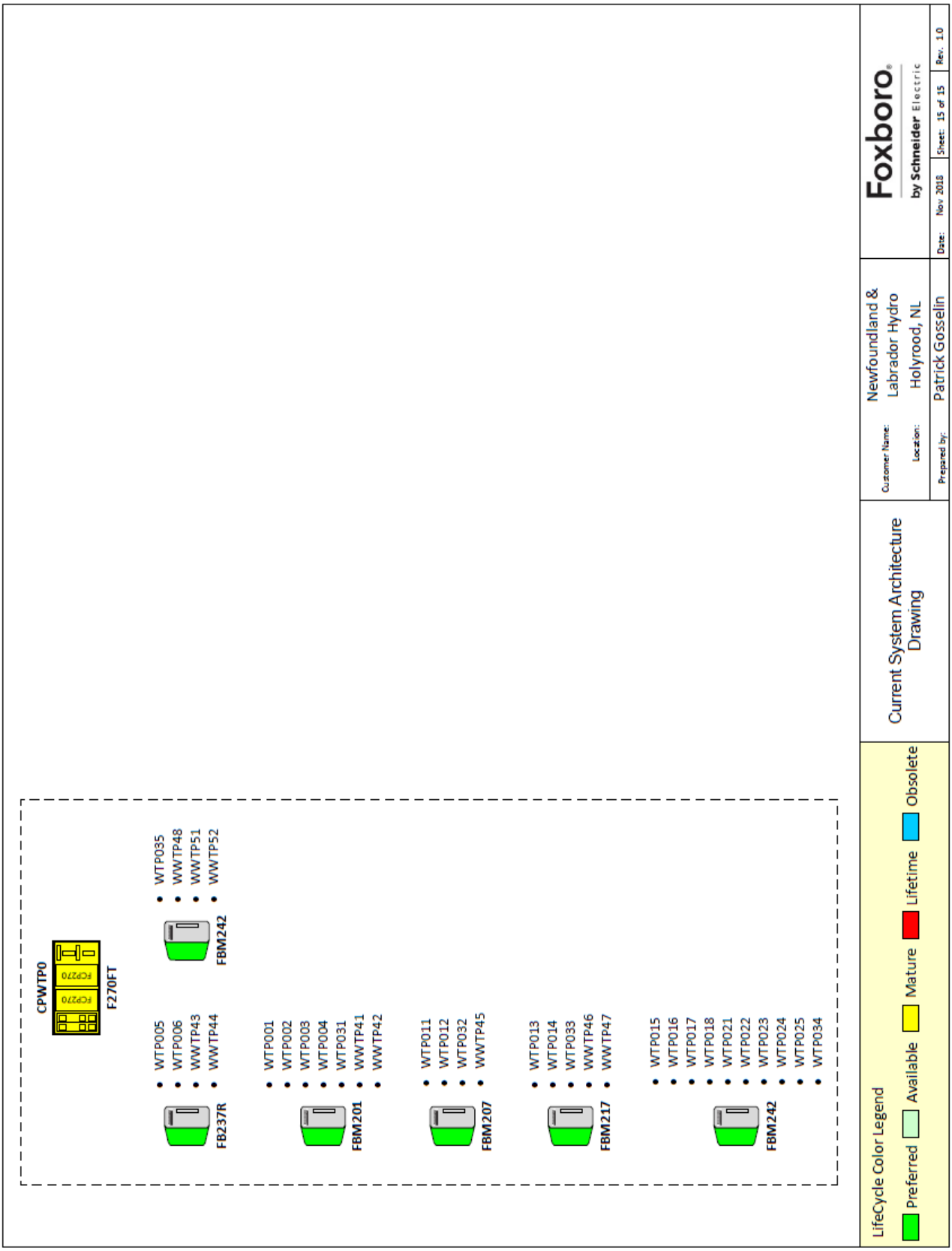
CPWTP0
FCP270
FCP270
F270FT
WTP035
WWTP48
WWTP51
WWTP52
FBM242
WTP005
WTP006
WWTP43
WWTP44
FB237R
WTP001
WTP002
WTP003
WTP004
WTP031
WWTP41
WWTP42
FBM201
WTP011
WTP012
WTP032
WWTP45
FBM207
WTP013
WTP014
WTP033
WWTP46
WWTP47
FBM217
WTP015
WTP016
WTP017
WTP018
WTP021
WTP022
WTP023
WTP024
WTP025
WTP034
FBM242
LifeCycle Color Legend
Preferred
Available
Mature
Lifetime
Obsolete
Current System Architecture Drawing
Customer Name: Newfoundland & Labrador Hydro
Location: Holyrood, NL
Prepared by: Patrick Gosselin
Date: Nov 2018
Sheet: 15 of 15
Rev. 1.0
Foxboro
by Schneider Electric

9. Terminal Station Refurbishment and Modernization (2021–2022)



2021 Capital Budget Application

Terminal Station Refurbishment and Modernization

(2021–2022)

July 2020

A report to the Board of Commissioners of Public Utilities

newfoundland labrador hydro
a nalcor energy company

Executive Summary

Newfoundland and Labrador Hydro ("Hydro") replaces or refurbishes failing or failed terminal station assets to ensure the delivery of safe, reliable, least-cost electricity in an environmentally responsible manner.

Hydro's philosophy for the assessment of equipment and the selection and justification of projects is outlined in the Terminal Station Asset Management Overview ("Asset Management Overview"). included as Attachment 1 to this report.

In the 2021 CBA, Hydro proposes the following activities under the Terminal Station Refurbishment and Modernization project:

- Replacement of instrument transformers;
- Replacement of disconnect switches;
- Replacement of surge arrestors;
- Refurbishment and modernization of power transformers;
- Replacement of terminal station lighting;
- Replace battery banks and chargers;
- Refurbishment of equipment foundations;
- Perform grounding upgrades;
- Installation of fire suppression systems in control buildings; and
- Protection, control, and monitoring replacements and modernization.

Hydro will execute the majority of these activities in a multi-year approach, with all activities scheduled for completion before the end of 2022.

The total project estimate is $13,353,600

Contents

Executive Summary i
1.0 Terminal Station Refurbishment and Modernization Project 1
2.0 Terminal Station Refurbishment and Modernization 2021 Projects 1
2.1 Electrical Equipment 1
2.1.1 Replace Instrument Transformers 2
2.1.2 Replace Disconnect Switches 3
2.1.3 Replace Surge Arresters 4
2.1.4 Refurbish and Upgrade Power Transformers 5
2.1.5 Replace Station Lighting 7
2.1.6 Replace Battery Banks and Chargers 8
2.1.7 Perform Grounding Upgrades 9
2.2 Civil Works and Buildings 11
2.2.1 Refurbish Equipment Foundations 11
2.2.2 Install Fire Suppression 12
2.3 Protection, Control, and Monitoring Refurbishment and Upgrades 12
2.3.1 Project Scope 13
3.0 Conclusion 15
3.1 Project Estimate 15
3.2 Project Schedules 15

List of Attachments

Attachment 1: Terminal Station Asset Management Overview

1.0 Terminal Station Refurbishment and Modernization Project

Terminal stations perform a critical role in the transmission and distribution of power across the Province. Terminal stations contain electrical equipment, including transformers, circuit breakers, instrument transformers, disconnect switches, and all associated protection and control relays and equipment required to protect, control, and operate the Province's electrical grid. Terminal stations act as transition points in the transmission system and interface points with the lower voltage distribution and generation systems. Hydro has 69 terminal stations across the Island and Labrador Interconnected Systems.

Hydro executes a robust capital program to ensure the delivery of safe, reliable, least-cost electricity in an environmentally responsible manner. Hydro's capital program sees the replacement and refurbishment of equipment based on Hydro's long-term asset management strategy as outlined in the Asset Management Overview.

2.0 Terminal Station Refurbishment and Modernization 2021 Projects

The Asset Management Overview (Attachment 1), outlines Hydro's asset management programs as they relate to terminal station equipment. The assets designated for replacement, refurbishment, or modernization herein have been selected by Hydro's Asset Management staff to align with Hydro's commitment to the delivery of safe, reliable, least-cost electricity in an environmentally responsible manner. Unless otherwise stated, there are no viable alternatives for the refurbishment or replacement of the equipment designated herein, as continued operation of the assets without refurbishment or replacement would put the reliability of the electrical system, or the safety of the public or those who operate the system, at risk. The philosophy for assessment, selection, and justification of these projects is found in the Asset Management Overview.

2.1 Electrical Equipment

The following electrical equipment upgrades and/or refurbishments are planned for 2021:

- Replace instrument transformers;

- Replace disconnect switches;
- Replace surge arrestors;
- Refurbish and upgrade power transformers;
- Replace station lighting;
- Replace battery banks and chargers; and
- Perform grounding upgrades.

2.1.1 Replace Instrument Transformers

The estimate of direct costs for this project is shown in Table 1.

Table 1: Direct Costs Estimate for the Replace Instrument Transformers Project ($000)

Project Cost	2021	2022	Beyond	Total
Material Supply	169.1	59.2	0.0	**228.3**
Labour	40.9	120.6	0.0	**161.5**
Consultant	0.0	0.0	0.0	**0.0**
Contract Work	0.0	0.0	0.0	**0.0**
Other Direct Costs	0.7	12.6	0.0	**13.3**
Interest and Escalation	1.8	17.3	0.0	**19.1**
Contingency	20.3	18.3	0.0	**38.6**
Total	**232.8**	**228.0**	**0.0**	**460.8**

Project Scope

Hydro replaces instrument transformers due to physical or electrical deterioration, or to comply with federal regulations regarding the use of polychlorinated biphenyls (“PCB”), as detailed in Section 4.1.1 of the Asset Management Overview. Hydro plans to replace the instrument transformers in Table 2.

Table 2: Instrument Transformer Replacements

Station	Equipment ID	Replacement Criteria
Deer Lake	TL239 'B' phase PT	Age (42)
Deer Lake	TL239 'C' phase PT	Age (42)
Howley	Bus 1 'A' phase PT	Condition
Howley	Bus 1 'B' phase PT	Condition
Howley	Bus 1 'C phase PT	Condition
Indian River	B1L363 'A' phase CT	Age (52)
Indian River	B1L363 'B' phase CT	Age (52)
Indian River	B1L363 'C' phase CT	Age (52)
Sunnyside	TL207 'C' phase PT	Condition
Western Avalon	B4T3 'A' phase CT	Age (52)
Western Avalon	B4T3 'B' phase CT	Age (52)
Western Avalon	B4T3 'C' phase CT	Age (52)
Western Avalon	B4T4 'A' phase CT	Age (53)
Western Avalon	B4T4 'B' phase CT	Age (53)
Western Avalon	B4T4 'C' phase CT	Age (53)
St. Anthony Airport	C1 'neutral'	Condition
St. Anthony Airport	C2 'neutral'	Condition
St. Anthony Airport	C3 'neutral'	Condition

2.1.2 Replace Disconnect Switches

The estimate of direct costs for this project is shown in Table 3.

Table 3: Direct Costs Estimate for the Replace Disconnect Switches Project ($000)

Project Cost	2021	2022	Beyond	Total
Material Supply	362.4	119.8	0.0	**482.2**
Labour	48.6	435.3	0.0	**483.9**
Consultant	34.8	35.5	0.0	**70.3**
Contract Work	0.0	57.9	0.0	**57.9**
Other Direct Costs	4.9	41.7	0.0	**46.6**
Interest and Escalation	2.5	40.4	0.0	**42.9**
Contingency	43.4	65.5	0.0	**108.9**
Total	**496.6**	**796.1**	**0.0**	**1,292.7**

Project Scope

Hydro replaces disconnect switches when damaged beyond refurbishment, when parts required for refurbishment are unavailable due to obsolescence, when it is not economical to refurbish, or when switches are damaged or deficient and have reached a service life of 50 years, as detailed in Section

4.1.2 of the Asset Management Overview. Hydro plans the replacement of the disconnect switches in Table 4.

Table 4: Disconnect Switches Replacements

Station	Equipment ID	Replacement Criteria
Bay D' Espoir	B5B10-2	Deficient + Age (54)
Bay D' Espoir	B1B2-2	Deficient + Age (54)
Sunnyside	L19L100-1	Deficient + Age (53)
Sunnyside	L19L100-2/L100G	Deficient + Age (53)
Sunnyside	L109T4-1	Deficient + Age (52)
Churchill Falls	B4B25	Deficient, Obsolete
Oxen Pond	B1T2	Deficient + Age (53)
Oxen Pond	B1T1	Deficient + Age (53)
Oxen Pond	B6T3	Deficient + Age (53)
Stony Brook	B3L22-1	Deficient + Age (52)
Stony Brook	B3L22-2/L22G	Deficient + Age (52)
Wabush TS	T4B1/T4G	Deficient + Age (53)
Wabush TS	29B15	Deficient + Age (53)
Wabush TS	CAP 1G	Deficient

2.1.3 Replace Surge Arresters

The estimate of direct costs for this project is shown in Table 5.

Table 5: Direct Costs Estimate for the Replace Surge Arresters Project ($000)

Project Cost	2021	2022	Beyond	Total
Material Supply	5.9	0.0	0.0	**5.9**
Labour	48.4	0.0	0.0	**48.4**
Consultant	0.0	0.0	0.0	**0.0**
Contract Work	0.0	0.0	0.0	**0.0**
Other Direct Costs	3.0	0.0	0.0	**3.0**
Interest and Escalation	1.6	0.0	0.0	**1.6**
Contingency	2.7	0.0	0.0	**2.7**
Total	**61.6**	**0.0**	**0.0**	**61.6**

Project Scope

Hydro replaces surge arresters based on physical and electrical deterioration, as detailed in Section 4.1.3 of the Asset Management Overview. The surge arresters in Table 6 have exceeded their expected

service life of 40 years and will be replaced to avoid in-service failure and subsequent service interruption.

Table 6: Surge Arresters Replacement Plan

Station	Equipment ID	Replacement Criteria
Hinds Lake	T2 H1	Age (41)
Hinds Lake	T2 H2	Age (41)
Hinds Lake	T2 H3	Age (41)

2.1.4 Refurbish and Upgrade Power Transformers

The estimate of direct costs for this project is shown in Table 7.

Table 7: Direct Costs Estimate for the Refurbish and Upgrade Power Transformers Project ($000)

Project Cost	2021	2022	Beyond	Total
Material Supply	720.9	707.3	0.0	**1,428.2**
Labour	477.9	566.7	0.0	**1,044.6**
Consultant	0.0	0.0	0.0	**0.0**
Contract Work	651.2	443.4	0.0	**1,094.6**
Other Direct Costs	96.5	99.5	0.0	**196.0**
Interest and Escalation	36.8	151.1	0.0	**187.9**
Contingency	188.5	172.5	0.0	**361.0**
Total	**2,171.8**	**2,140.5**	**0.0**	**4,312.3**

Project Scope

Hydro carries out a number of refurbishment and upgrade activities on power transformers, including:

- Oil reclamation or replacement;
- Oil dehydration;
- Corrosion remediation;
- Refurbishment to address leaks;
- Tap changer overhauls;
- Bushing replacements;

- Protective device replacements;
- Cooling fan/radiator replacement; and
- Major refurbishment, which may include combinations of the above.

Hydro also installs online dissolved-gas analysis devices on critical power transformers. Hydro's power transformer refurbishment and modernization philosophies can be found in section 4.1.6 of the Asset Management Overview. Hydro plans to complete refurbishments and upgrades on the following power transformers:

2021

- Bottom Brook T2 Major Refurbishment: Oil reclamation and replace radiators (4);
- Deer Lake T1 Major Refurbishment: Replace radiators (6) and install online gas monitor (composite gas);
- Muskrat Falls T1 Major Refurbishment: Replace bushings (HV, LV, X0), install online oil dehydrator, and leak refurbishment;
- Wabush Terminal Station SS1: Replace bushings (HV);
- Bay D' Espoir T5 : Replace radiators (18);
- Bay D' Espoir T10: Refurbish tap changer (replace deteriorated tap changer parts) and install online DGA monitor (composite gas);
- Vanier TS #2 T2: Refurbish tap changer (replace deteriorated tap changer parts);
- Cat Arm T2: Oil processing;
- Massey Drive T1: Install online DGA monitor (multi-gas); and
- Stony Brook T1: Install online DGA monitor (multi-gas).

2022

- Conne River T1 Major Refurbishment: Replace bushings (HV, LV, X0) and paint radiators;
- Grand Falls T1 Major Refurbishment: Replace bushings (HV), oil processing;
- Holyrood T5 Major Refurbishment: Install online gas monitor (composite gas), install online - oil dehydrator, and install 2nd stage radiator cooling;
- Holyrood T10 Major Refurbishment: Oil reclamation, replace radiators (3), and install online gas monitor (composite gas), painting;
- Bay D' Espoir T11: Replace bushings (HV, LV, X0);
- Holyrood SST3-4: Replace bushings (HV, LV, X0);
- Hardwoods T1: Install online DGA monitor (multi-gas);
- Masset Drive T2: Install online DGA monitor (multi-gas);
- Bay D' Espoir T12: Install online DGA monitor (composite gas);
- Western Avalon T1: Install online DGA monitor (composite gas); and
- Western Avalon T2: Install online DGA monitor (composite gas).

2.1.5 Replace Station Lighting

The estimate of direct costs for this project is shown in Table 8.

Table 8: Direct Costs Estimate for the Replace Station Lighting Project ($000)

Project Cost	2021	2022	Beyond	Total
Material Supply	0.0	0.0	0.0	**0.0**
Labour	33.5	26.7	0.0	**60.2**
Consultant	7.7	7.9	0.0	**15.6**
Contract Work	0.0	171.2	0.0	**171.2**
Other Direct Costs	0.8	0.8	0.0	**1.6**
Interest and Escalation	1.0	5.7	0.0	**6.7**
Contingency	4.1	19.5	0.0	**23.6**
Total	**47.1**	**231.8**	**0.0**	**278.9**

Project Scope

Hydro replaces or adds station lighting due to deteriorated physical condition or inadequacy of existing lighting in order to ensure adequate station lighting during the night for the safety of operations personnel, as detailed in section 4.1.11 of the Asset Management Overview. Hydro assessed the terminal station lighting in the Stony Brook Terminal Station and identified significant corrosion and moisture ingress issues impacting the function of the lighting system. Hydro plans to replace the Stony Brook Terminal Station lighting in 2022.

2.1.6 Replace Battery Banks and Chargers

The estimate of direct costs for this project is shown in Table 9.

Table 9: Direct Costs Estimate for the Replace Battery Banks and Chargers Project ($000)

Project Cost	2021	2022	Beyond	Total
Material Supply	0.0	81.5	0.0	**81.5**
Labour	19.3	25.7	0.0	**45.0**
Consultant	22.2	0.0	0.0	**22.2**
Contract Work	0.0	0.0	0.0	**0.0**
Other Direct Costs	4.8	1.3	0.0	**6.1**
Interest and Escalation	1.4	6.4	0.0	**7.8**
Contingency	4.5	10.3	0.0	**14.8**
Total	**52.2**	**125.2**	**0.0**	**177.4**

Project Scope

The service life of flooded cell batteries is 18–20 years and valve regulated lead acid batteries is 7–10 years. Battery chargers have a service life of 20 years. Hydro replaces battery banks and chargers that

meet this age criteria. Hydro also replaces battery banks and chargers if testing shows that they are deteriorating or are approaching insufficient capacity, as detailed in Section 4.1.9 of the Asset Management Overview. Hydro plans to replace battery banks in the following locations:

- St. Anthony Airport Terminal Station; and
- Roddickton Terminal Station.

Hydro plans to replace battery chargers in the following locations:

- Roddickton Terminal Station

2.1.7 Perform Grounding Upgrades

The estimate of direct costs for this project is shown in Table 9.

Table 10: Direct Costs Estimate for the Perform Grounding Upgrades project ($000)

Project Cost	2021	2022	Beyond	Total
Material Supply	0.0	145.1	0.0	**145.1**
Labour	185.6	143.8	0.0	**329.4**
Consultant	537.2	567.6	0.0	**1,104.8**
Contract Work	0.0	253.2	0.0	**253.2**
Other Direct Costs	12.7	5.4	0.0	**18.1**
Interest and Escalation	13.5	66.1	0.0	**79.6**
Contingency	71.2	105.9		**177.1**
Total	**820.2**	**1,287.1**	**0.0**	**2,107.3**

Project Scope

Hydro analyzes terminal station grounding systems to identify hazardous step and touch potentials, and upgrades station grounding to eliminate these hazards, as well as ground grid integrity assessments, as detailed in Section 4.1.5 of the Asset Management Overview.

Hydro plans to analyze and, where required, upgrade the following stations:

- Step and touch potential analysis:
  - Cow Head;

- Grandy Brook;
- Hawkes Bay;
- Main Brook;
- Muskrat Falls;
- Parsons Pond;
- Peter's Barren;
- Rattle Brook;
- Rocky Harbour Tap;
- Sally's Cove;
- St. Anthony Airport; and
- St. Anthony Diesel.

- Integrity assessment:
  - Grandy Brook;
  - Happy Valley;
  - Hawke's Bay;
  - Main Brook;
  - Muskrat Falls;
  - Oxen Pond;
  - Parson's Pond;
  - Peter's Barren;

- Rattle Brook;
- Rocky Harbour Tap;
- Sally's Cove;
- St. Anthony Airport;
- St. Anthony Diesel; and
- Sunnyside.

Grounding Upgrades

Complete ground grid upgrades for terminal stations with hazardous step and/or touch potentials as determined by analysis completed at 12 terminal stations.

2.2 Civil Works and Buildings

The following Civil Works and Buildings activities are proposed for 2021:

- Refurbish equipment foundations; and
- Install fire suppression.

2.2.1 Refurbish Equipment Foundations

The estimate of direct costs for this project is shown in Table 11.

Table 11: Direct Costs Estimate for the Refurbish Equipment Foundations Project ($000)

Project Cost	2021	2022	Beyond	Total
Material Supply	0.0	0.0	0.0	**0.0**
Labour	46.4	0.0	0.0	**46.4**
Consultant	45.4	0.0	0.0	**45.4**
Contract Work	63.2	0.0	0.0	**63.2**
Other Direct Costs	4.6	0.0	0.0	**4.6**
Interest and Escalation	1.9	0.0	0.0	**1.9**
Contingency	13.9	0.0	0.0	**13.9**
Total	**175.4**	**0.0**	**0.0**	**175.4**

Project Scope

Hydro refurbishes concrete foundations in terminal stations when the foundations have deteriorated severely, compromising structural integrity if not addressed, as detailed in Section 4.2.1 of the Asset Management Strategy. Based on a condition assessment Hydro plans to refurbish equipment foundations in the following terminal stations:

- Grand Falls Converter;
- Hawke's Bay;
- Bear Cove; and
- Plum Point.

2.2.2 Install Fire Suppression

The estimate of direct costs for this project is shown in Table 12.

Table 12: Direct Costs Estimate for the Install Fire Suppression Project ($000)

Project Cost	2021	2022	Beyond	Total
Material Supply	0.0	4.2	0.0	**4.2**
Labour	24.5	44.8	0.0	**69.3**
Consultant	64.2	111.9	0.0	**176.1**
Contract Work	0.0	333.4	0.0	**333.4**
Other Direct Costs	0.7	1.6	0.0	**2.3**
Interest and Escalation	2.1	13.1	0.0	**15.2**
Contingency	8.7	46.9	0.0	**55.6**
Total	**100.2**	**555.9**	**0.0**	**656.1**

Project Scope

Hydro is installing fire suppression systems in all 230 kV terminal station control buildings due to the station criticality, as detailed in Section 4.2.2 of the Asset Management Strategy. Hydro plans to install a fire suppression system in the Massey Drive Terminal Station control building in 2021–2022.

2.3 Protection, Control, and Monitoring Refurbishment and Upgrades

The estimate of direct costs for this project is shown in Table 13.

Table 13: Direct Costs Estimate for the Protection, Control, and Monitoring Refurbishment Upgrades Project ($000)

Project Cost	2021	2022	Beyond	Total
Material Supply	862.0	22.4	0.0	884.4
Labour	731.0	1,222.4	0.0	1,953.4
Consultant	103.4	23.2	0.0	126.6
Contract Work	138.2	228.6	0.0	366.8
Other Direct Costs	27.8	89.0	0.0	116.8
Interest and Escalation	47.9	120.7	0.0	168.6
Contingency	103.4	111.0	0.0	214.4
Total	**2,013.7**	**1,817.3**	**0.0**	**3,831.0**

2.3.1 Project Scope

Hydro has an ongoing program to replace electromechanical and obsolete solid-state relays with modern digital relays, improving reliability and functionality. Hydro's approach to protection, control, and modernization asset management is detailed in Section 4.3 of the Asset Management Overview.

Hydro plans to replace the following new protective relays in 2021–2022:

- TL 248 (Deer Lake and Massey Drive);
- TL 207 (Come-By-Chance and Sunnyside);
- TL 222 (Stony Brook and Springdale);
- Bus B1 (Western Avalon);
- Transformer T4 (Wabush Terminal Station);
- IOC Line #3 (Wabush Terminal Station); and
- IOC Line #5 (Wabush Terminal Station).

Hydro assesses the condition of legacy Breaker Failure protection systems in 230 kV stations during regular maintenance procedures. Through these assessments, Hydro has identified the requirement to replace the breaker failure protection in the following terminal stations:

- Oxen Pond; and
- Massey Drive.

Hydro will also upgrade Data Alarm Management in the following stations, to provide higher data resolution for the prompt and accurate identification and troubleshooting of system issues:

- Oxen Pond.

Hydro will also install Digital Fault Recorders in the following locations to improve the analysis of system events in the area served by the station:

- Howley.

Hydro will also upgrade Transformer Paralleling (Tap-Changer) controls for the following transformers, as outlined in Section 4.3.1 of the Asset Management Overview:

- Hardwoods T1;
- Hardwoods T2;
- Hardwoods T3; and
- Hardwoods T4.

Hydro will also refurbish or replace protection and control panels, wiring, cables, or trenches that may require alteration, replacement, or addition to existing wiring due to deterioration from environment conditions, accidental damage or the modification/addition of protection and control equipment.

3.0 Conclusion

This report provides information and justification related to the projects Hydro is proposing to undertake on its Thermal Stations under its Terminal Station Refurbishment and Modernization Program in 2021–2022.

3.1 Project Estimate

The estimate for this project is shown in Table 14.

Table 14: Project Estimate ($000)

Project Cost	2021	2022	Beyond	Total
Material Supply	2,120.2	1,139.6	0.0	3,259.8
Labour	1,656.0	2,585.9	0.0	4,241.9
Consultant	815.0	746.1	0.0	1,561.1
Contract Work	852.7	1,487.7	0.0	2,340.4
Other Direct Costs	156.5	251.9	0.0	408.4
Interest and Escalation	110.5	420.6	0.0	531.1
Contingency	460.7	550.2	0.0	1,010.9
Total	**6,171.6**	**7,182.0**	**0.0**	**13,353.6**

3.2 Project Schedules

Due to the large number of activities enveloped in this project, it is not practical to provide individual project schedules. Detailed project schedules will be developed at project initiation. A typical high-level schedule for a multi-year project is as follows:

- Year 1: Planning, design, and procurement; and
- Year 2: Construction, commissioning, and closeout.

All activities will be completed before the end of 2022.

Attachment 1

Terminal Station Asset Management Overview

newfoundland labrador hydro
a nalcor energy company



2021 Capital Budget Application

Terminal Station Asset Management Overview

Version 5

July 2020

A report to the Board of Commissioners of Public Utilities

newfoundland labrador hydro
a nalcor energy company

Executive Summary

Newfoundland and Labrador Hydro ("Hydro") has developed an ongoing capital program to replace or refurbish assets as they reach the end of their design life or require attention due to obsolescence or anticipated failure.

Before 2017, Hydro's terminal station projects could be divided into two categories: (1) stand-alone and (2) programs. Programs included projects that are proposed year after year to address the upgrade or replacements of deteriorated equipment, such as disconnects or instrument transformers, and have similar justification each year. Stand-alone would include projects that do not meet the definition of a program. Hydro has typically had as many as 15 separate program-type terminal station projects in its capital budget applications, with each program based upon a particular type of asset.

Starting with the "2017 Capital Budget Application" ("CBA"), Hydro implemented a change to how the terminal station projects are submitted for consideration by the Board of Commissioners of Public Utilities ("Board"). Hydro has consolidated the programs into the Terminal Station Refurbishment and Modernization project ("Project"), thereby improving regulatory efficiency and easing the administrative effort for both the Board and Hydro and allowing Hydro to look for opportunities to realize efficiencies by improving coordination of capital and maintenance work in terminal stations.

In 2019, Hydro submitted a revised Terminal Station Asset Management Overview ("Asset Management Overview") to provide an updated overview of Hydro's asset maintenance philosophies in one document. Hydro will submit the Project within annual CBAs going forward, proposing required terminal station work and referencing this Asset Management Overview document.

Contents

Executive Summary i
1.0 Introduction 1
1.1 Changes in Version 5 2
2.0 Background 2
2.1 Newfoundland and Labrador Hydro's Terminal Stations 2
2.2 Terminal Station Infrastructure 2
3.0 Terminal Station Capital Projects 3
3.1 Historical Terminal Station Capital Projects 3
3.2 Hydro's Approach to Terminal Station Capital Project Proposals 3
3.3 Benefits of This Approach 5
4.0 Asset Management Programs 6
4.1 Electrical Equipment 6
4.1.1 High-Voltage Instrument Transformer Replacements 6
4.1.2 High-Voltage Switch Replacements 9
4.1.3 Surge Arrester Replacement 11
4.1.4 Insulator Replacement 13
4.1.5 Grounding Refurbishment and Upgrades 14
4.1.6 Power Transformer Upgrades and Refurbishment 15
4.1.7 Circuit Breaker Refurbishment and Replacements 20
4.1.8 Station Service Refurbishment and Upgrades 21
4.1.9 Battery Banks and Chargers 22
4.1.10 Install Breaker Bypass Switches 23
4.1.11 Replace Station Lighting 25
4.1.12 Synchronous Condensers 26
4.2 Civil Works and Buildings 27
4.2.1 Equipment Foundations 27
4.2.2 Fire Protection 28
4.2.3 Control Buildings 29
4.3 Protection, Control, and Monitoring 30
4.3.1 Protection and Control Upgrades and Refurbishment 30

1.0 Introduction

Hydro has 69 terminal stations that contain electrical equipment such as transformers, circuit breakers, instrument transformers, disconnect switches, and associated protection and control relays and equipment required to protect, control, and operate Hydro's electrical grid.

Hydro's Asset Management System governs the life cycle of its terminal station assets. This system monitors, maintains, refurbishes, replaces, and disposes of assets with the objective of providing safe, reliable electrical power in an environmentally responsible manner at least cost. Within this system, assets are grouped such as breaker, transformers, grounding systems, buildings, and sites. This allows the asset managers to establish consistent practices for equipment specification, placement, maintenance, refurbishment, replacement, and disposal. These practices mean that the monitoring, assessments, action justifications for capital refurbishment and replacement for asset sustaining projects are consistent. Hydro established programs which enact these practices for groups or sub groupings of assets, for example High Voltage Switch Replacements.

Part of Hydro's annual capital program is a sustained effort to ensure the safety and reliability of terminal station assets. Historically, the Board's approval for this effort has been requested by Hydro submitting either individual projects for particular assets, or programs for Station sustaining work in its CBA. This approach can result in a segmented view of the expenditures to sustain Station assets. For example in the 2016 CBA, there were 15 separate program-type projects submitted. The expenditures detailed in these projects according to the Board's classifications are normal capital expenditures. This situation provides an opportunity to increase regulatory efficiency.

With the 2017 CBA, Hydro consolidated planned terminal station sustaining work into the Project. Additionally, Hydro submitted a project titled "Terminal Station In-Service Failures" to cover the replacement or refurbishment of failed equipment, or incipient failures. Hydro is utilizing the Asset Management Overview as a reference for both projects to streamline and focus information submitted. The Asset Management Overview provides supporting information which was, historically, annually presented for similar classification projects in the CBA. The remainder of this document provides information as to the assets involved, an overview of each asset program, and how this document will be updated in the event of changes to Hydro's asset management philosophies.

Hydro will provide an updated Asset Management Overview as it implements changes to its asset management philosophies appropriate for inclusion in the Asset Management Overview.

1.1 Changes in Version 5

Hydro submited Version 5 of this document in the 2021 CBA. All material updates in this version are shaded in grey, and are summarized below:

- Addition of Section 4.1.12: Synchronous Condensers; and
- Addition of refurbishment criteria for circuit breakers.

Minor changes to syntax have been made to improve readability. These minor changes have not been shaded.

2.0 Background

2.1 Newfoundland and Labrador Hydro's Terminal Stations

Terminal stations play a critical role in the transmission and distribution of electricity. Terminal stations contain electrical equipment, such as transformers, circuit breakers, instrument transformers, disconnect switches, and associated protection and control relays and equipment required to protect, control, and operate the Hydro's electrical grid. Stations act as transition points within the transmission system, and interface points with the lower voltage distribution and generation systems. Hydro has 70 terminal stations throughout Newfoundland and Labrador.

2.2 Terminal Station Infrastructure

Stations contain the following infrastructure, which is described throughout this report:

- Transformers;
- Circuit breakers;
- Instrument transformers;
- Disconnect, bypass, and ground switches;
- Surge arresters;
- Grounding;
- Buswork;

- Steel structures and foundations;
- Insulators
- Control buildings;
- Protection and control relays;
- Yards, fences, and access roads;
- Battery banks;
- Terminal station lighting; and
- Synchronous condensors.

Many of Hydro's terminal stations were constructed in the 1960s. Annual capital commitment is needed to sustain terminal station assets to ensure that Hydro can continue to provide customers with reliable electrical service.

3.0 Terminal Station Capital Projects

3.1 Historical Terminal Station Capital Projects

In the 2016 CBA there were 22 individual terminal station projects which accounted for $30 million, or 16% of the capital budget. Historically, Hydro's terminal station projects were divided into two categories: (1) stand-alone and (2) programs. Programs include projects that are proposed year after year to address the required refurbishment or replacement of assets such as disconnects or instrument transformers, and have similar justification and other information presented each year. Of the 22 individual terminal station projects proposed in 2016, 15 were program-type projects. In the 2017 CBA, Hydro consolidated the historical station projects into the Project.

3.2 Hydro's Approach to Terminal Station Capital Project Proposals

The programs now included in the Project are:

- Upgrade Circuit Breakers;
- Replace Disconnect Switches;
- Install Fire Protection;
- Replace Surge Arresters;

- Upgrade Terminal Station Foundations;
- Refurbish Control Buildings;
- Replace Station Lighting;
- Replace Battery Banks and Chargers;
- Upgrade Terminal Station for Mobile Substation;
- Install Breaker Bypass Switches;
- Protection and Control Refurbishment and Upgrades;[1]

The Project excludes:

- Transformer replacement and transformer spares: although transformer replacement fits within the description of a terminal station program, these projects often have unique justification and a high project cost and, therefore, are proposed separately.
- Activities which cannot be scheduled for inclusion in a CBA as these will be submitted as either supplemental to the CBA or executed in the Terminal Stations In-Service Failures project.
- Activities in response to additional load or reliability requirements. As these projects generally have unique justification, and will be proposed separately.
- Activities in response to significant isolated issues in a particular station, such as replacement of a failed power transformer. As these projects generally have unique justification, the projects will be proposed separately.

Hydro continues to maintain individual records with regards to asset capital, maintenance, and retirement expenditures and performance, which will be queried to support the development of the annual capital plan.

[1] As noted in the 2017 version of the Asset Management Overview, the 2016 Upgrade Terminal Station Protection and Control Upgrade, Upgrade Protective Relays, Upgrade Fault Recorders, Upgrade Data Alarm Systems and Install Breaker Failure Protection projects were combined in the Asset Management Overview and the Project as the Protection and Control Refurbishment and Upgrades Program.

This document is submitted to the Board as part of the 2021 CBA. Hydro will annually submit proposals for the Terminal Station Refurbishment and Modernization project and Terminal Station In-Service Failures project referencing the most recent Asset Management Overviews. Future CBAs will not include a copy of the Asset Management Overview unless Hydro revises its contents. When the Asset Management Overview is revised, Hydro will clearly denote such changes, highlighted in gray, for review and approval by the Board.

3.3 Benefits of This Approach

As supporting information for programs changes infrequently, referencing the Asset Management Overview in the Project documentation will eliminate the preparation and review of repetitious information. Hydro estimates that this approach could save up to $120,000[2] annually, not including time and costs for review by the Board and Intervenors.

Hydro has a proactive Asset Management System which strives to anticipate future failures so that refurbishment or replacement can be incorporated into a CBA. However, there are situations were immediate refurbishment or replacement, which has not be included in an CBA, has to be undertaken due to the occurrence of an unanticipated failure or the recognition of an incipient failure so as to maintain the delivery of safe, reliable electricity at least cost. These situations seldom include extenuating or abnormal circumstances and costs. With aging terminal station assets unanticipated failures may increase. This increase will require additional future efforts to provide and review regulatory documentation. By introducing a Terminal Station In-Service Failures project, there will be a reduced need for that documentation and change management processes. Each year, Hydro will provide a concise summary of the previous year's work.

Hydro expects the Project will provide opportunities whereby Hydro can further optimize capital and maintenance work so as to minimize outages to customers and equipment as personnel look to further coordinate work by location.

[2] If the work undertaken in the 2017 Terminal Station Refurbishment and Modernization project had been submitted as 12 individual projects, it is estimated preparation would be approximately $10,000 per project.

4.0 Asset Management Programs

4.1 Electrical Equipment

4.1.1 High-Voltage Instrument Transformer Replacements

The metering protection and control devices such as protective relaying, power quality monitors, and kWh meters used in generation and transmission systems are not manufactured to handle the currents and voltages inherent to those systems. Measurement of the electricity's currents and voltages are provided to these devices through a Current Transformer (CT) and a Potential Transformer (PT)respectively. CTs and PTs are collectively known as instrument transformers (ITs). Hydro has approximately 900 individual high-voltage instrument transformers within the Island and Labrador Interconnected Systems.

A high-voltage Instrument Transformer consists of an insulated electrical primary and secondary winding, tank, and bushing components. The insulation system involves the use of insulating oil or dry type insulation and a high-voltage porcelain bushing which allows the safe connection of the winding to high-voltage conductors. The winding is enclosed in a steel tank.



Figure 1: 69 kV CT (Left) and PT (Right)

Hydro manages planned budgeted Instrument Transformer replacements in four categories:

1) Condition;
2) PCB Compliance Replacements;

3) Manufacturer and model; and

4) Age.

Condition

Deterioration or damage to the various Instrument Transformer components can result in the failure of the unit to provide accurate measurements to metering, protection, and control devices, which may affect the safe and reliable operation of the generation and transmission systems. Failure could also result in an oil spill. Also, in some situations pieces of the Instrument Transformer may be forcibly projected resulting in a safety risk for personnel in the area, or damage to other infrastructure.

Damage to an Instrument Transformer normally results from vandalism, impacts from catastrophically failed equipment, or accidental contact of mobile equipment. Upon such incidents, Hydro assesses the electrical and physical integrity of Instrument Transformer to determine if replacement is required.

Hydro monitors instrument transformers for physical and electrical deterioration by conducting regular visual inspections of the units as part of its station inspection program plus regularly scheduled station infrared inspections and electrical insulation testing.

Physical deterioration involves conditions such as oil leaks, rusting, or small chips and cracks in the insulation. Figure 2 shows an example of rusting on a PT tanks.



Figure 2: Rusting PT

Electrical deterioration is identified by conducting power factor testing at intervals which is used to establish the rate and level of insulation degradation. Hydro uses Doble Engineering Company to provide assistance with assessment of the test results as required.

On an ongoing basis, Hydro's asset management personnel review the unit deterioration information and determine when corrective maintenance or unit replacement is required. Hydro conducts minor Instrument Transformer corrective maintenance such as painting and small bushing chip treatment. External services to economically undertake major corrective maintenance or unit refurbishments do not exist, so units requiring major corrective maintenance or refurbishments are replaced.

PCB Compliance Replacements

Environment Canada's polychlorinated biphenyl ("PCB") Regulations requires that by 2025 all instrument transformers will not have a PCB concentration greater that 50 mg/kg. Instrument transformers are sealed oil filled units, where the oil, which acts as an electrical insulator, has been known to contain PCBs for equipment prior to 1985. Due to the age of the units and the risk of introducing contamination such as air into the unit, which could impact the electrical integrity of instrument transformers, Hydro does not sample instrument transformers. Therefore, establishing the actual PCB concentration in an Instrument Transformer is not possible. Hydro, in consultation with

manufacturers, has established that units manufactured before 1985 are suspected to contain PCBs in concentration levels greater than or equal to 50 mg/kg. Thus Hydro has a program to replace all suspect oil-filled instrument transformers before 2025.

Manufacturer and Model

In 2010 Hydro experienced a failure of a 230 kV ASEA IMBA Current Transformer. The failure analysis recommended this manufacturer and model be replaced over time. These replacements are included in this program. The last of these replacements was completed in 2019 and hence this criterion will be removed from this program.

Age

Hydro targets replacement at 40 years of age to reduce the risk of in-service failures and minimize service interruptions. Original Equipment Manufacturers ("OEM") recommend that the life of an instrument transformer is approximately 30 to 40 years. Recent in-service failures occurred between 20–39 years of life (three of which occurred between 29–39 years of life).

Exclusions from Instrument Transformer replacement program

Modern-day circuit breaker technology includes CTs embedded in the circuit breaker bushings. Therefore, where possible, external CTs will be displaced by bushing CTs as circuit breakers are replaced, and such CTs are not included in this program.

4.1.2 High-Voltage Switch Replacements

High-voltage switches are used to isolate equipment either for maintenance activities or for system operation and control (disconnect switches). Switches are also used to bypass equipment to prevent customer outages while work is being performed on the equipment. Disconnect switches are an important part of the Work Protection Code as they provide a visible air gap (i.e., visible isolation) for utility workers. Work protection is defined as "a guarantee that an ISOLATED, or ISOLATED and DE-ENERGIZED, condition has been established for worker protection and will continue to exist, except for authorized tests." Proper operation of disconnect switches is essential for a safe work environment and for reliable operation.

The basic components of a disconnect switch are the blade assembly, insulators, switch base and operating mechanism. The blade assembly is the current carrying component in the switch and the operating mechanism moves it to open and close the switch. The insulators are made of porcelain and insulate the switch base and operating mechanism from the current carrying parts. The switch base supports the insulators and is mounted to a metal frame support structure. The operating mechanism is operated either manually, by using a handle at ground level to open and close the blade, or by a motor operated device, in which case the switch is known as a motor-operated disconnect. A disconnect and its associated components are shown in Figure 3.

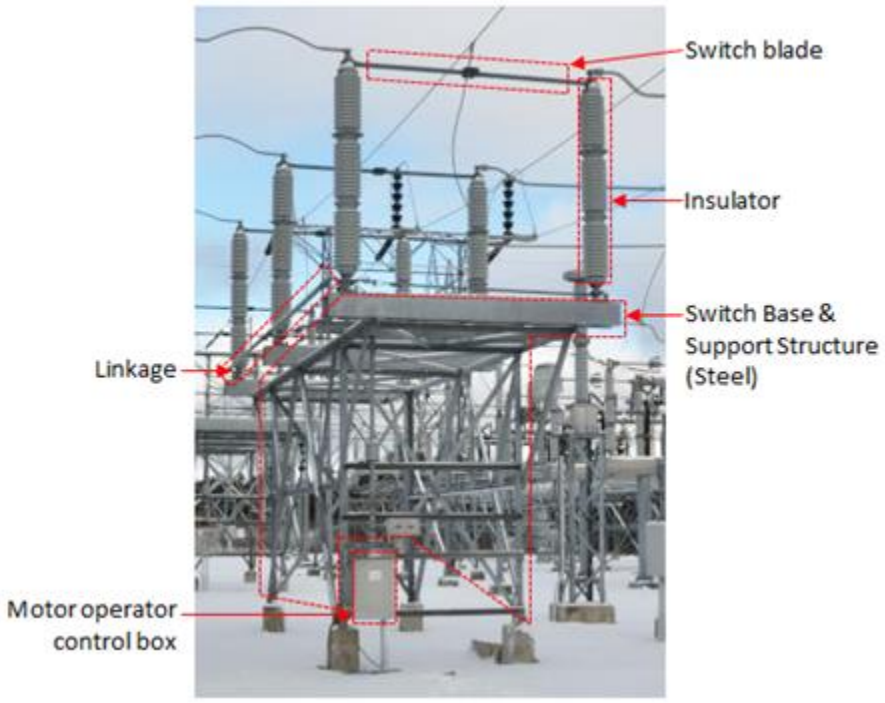

Figure 3: Various Components of a High-Voltage Disconnect Switch

Hydro monitors the condition of its switches by conducting regular visual inspections of the units as part of its station inspection program and its infrared inspection program and by reviewing reports from the JDE E1 work order system or staff who operate the switch, outlining problems such as inoperable mechanical linkages, misalignment of switch blades, broken insulators, and seizing of moving parts. Asset management personnel determine the timing of corrective maintenance or switch replacement. If the required parts are available then repairs are undertaken as part of on-going maintenance. Switches

that have operating deficiencies and have reached a service life of 50 years or greater are designated for replacement. Switches that have no replacement parts available due to obsolescence, damaged beyond repair, or cannot be economically repaired and do not require immediate replacement are designated for replacement under this program.

Figure 4 shows an example of a badly damaged disconnect switch.



Figure 4: Broken Insulator on 69 kV Disconnect Switch

4.1.3 Surge Arrester Replacement

Surge arresters (also known as lightning arresters) are used on critical terminal station equipment to protect that equipment from voltage due to lightning, extreme system operating voltages, and switching transients, collectively called “overvoltages.” In these situations, voltage at the equipment can rise to levels which could damage the equipment’s insulation. The surge arresters act to maintain the voltages within acceptable levels. Without surge arresters, equipment insulation could be damaged and faults could result during overvoltages. Hydro typically has surge arresters installed on the high side and low voltage sides of power transformers rated 46 kV and above.

Figure 5 shows the arresters on a 230 kV power transformer.



Figure 5: Western Avalon Terminal Station Transformer T3 230 kV Surge Arresters

Surge arresters can fail because of the cumulative effects of prolonged or multiple overvoltages. When a surge arrester fails, it is not repairable and must be replaced immediately otherwise the major equipment maybe exposed to damaging overvoltages. The older arrester designs have a higher incidence of failure than the newer designs.

Hydro's surge arrester asset management program replaces surge arresters based upon the following criteria:

- Removal of gapped type arresters with zinc oxide design due to enhanced performance;
- Replacement of units due to a condition identified through visual inspections for chips or cracks or electrical testing such as power factor testing;
- If failures occur on a given transformer, all arresters on both the high and low side are considered for replacement either immediately or in a planned fashion; and

- If transformers are being planned for maintenance or other capital work, consideration is given to changing aged arresters on a common outage. Hydro targets replacement at 40 years of age, to reduce the risk of in-service failures and minimize service interruptions.

4.1.4 Insulator Replacement

Insulators provide electrical insulation between energized equipment and ground. When an insulator fails and a fault occurs, a safety hazard and/or customer outages may occur.

Insulators consist of insulating material such as glass, porcelain and metal end fittings to attach the insulator to the structure and the conductor. The metallic hardware is mated with the porcelain or glass insulator using cement. There are different styles of insulators. An example of a station post insulator is shown in Figure 6.

Terminal stations contain post type, cap and pin-top, multi-cone, and suspension type insulators.

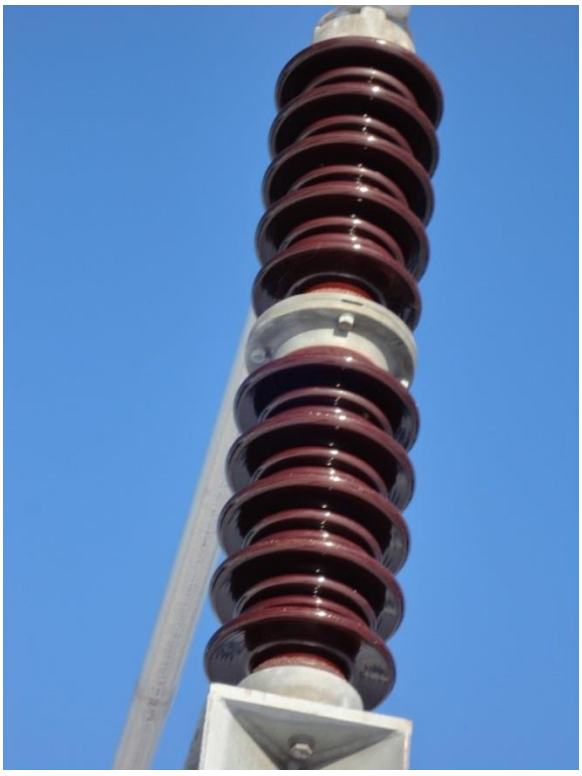

Figure 6: Multi-Cone Type Insulator Prone to Failure due to Cement Growth

For insulators using porcelain, cement is used in mating the porcelain and metal hardware. Some older insulators have been damaged by a phenomenon known as cement growth. This is a common problem in the utility industry. In such situations, water is absorbed into the concrete, during freeze/thaw cycles, causing swelling of the cement placing stress upon the porcelain. Over time, the increasing pressure caused by cement growth will crack or break the porcelain resulting in insulator failure. In such situations, porcelain may fall presenting a safety hazard to crews or damaging equipment below. Also faults resulting in outages to customers often occur, when insulator failure leads to flash-over. Some time ago, insulator manufacturers identified and researched cement growth problems and have improved their cement quality to eliminate this problem.

Hydro carries out detailed insulator surveys by geographical area. Hydro identifies any insulator types known to be prone to failure due to cement growth, and replaces these insulators under this program.

4.1.5 Grounding Refurbishment and Upgrades

The grounding system in a terminal station or distribution substation consists of copper wire used in the ground grid under the station, gradient control mats for high-voltage switches, and bonding wiring connecting the structure and equipment metal components to the ground grid. In the event of a ground fault, electrical potential differences will exist in the grounding system. If the grounding system is inadequate or deteriorated these differences may be hazardous to personnel. These potential differences are known as step and touch potentials. Effective station grounding reduces these potentials to eliminate the hazard.



Figure 7: Typical Grounding Connection on Terminal Station Fence

To determine whether grounding upgrades are required, Hydro performs a step and touch potential analysis of the terminal station or distribution substation. Step and touch potential analysis involves the gathering of field data and conducting analysis in order to determine if ground grid modifications are required to eliminate step and touch potential hazard. This engineering is conducted in accordance with the Institute of Electrical and Electronics Engineers ("IEEE") Standard 80-2000. Grounding systems with hazardous step and/or touch potentials are upgraded, by adding additional equipment bonding, gradient control mats, or copper wire to the station grounding grid. In the case where the terminal station grounding infrastructure has deteriorated with age, or is damaged due to accidental contact or vandalism, the grounding system is refurbished by repairing damage or replacing missing infrastructure. Upgrades and refurbishments are made in accordance with Hydro's Terminal Station Grounding Standard.

4.1.6 Power Transformer Upgrades and Refurbishment

Power transformers are a critical component of the power system. Transformers allow the cost-effective production, transmission, and distribution of electricity by converting the electricity to an appropriate voltage for each segment of the electrical system and allow for economic construction and operation of the electrical system.

Hydro has 118 power transformers and three oil-filled shunt reactors 46 kV and above, as well as several station service transformers at voltages lower than 46 kV.

The basic components of a power transformer are:

- Transformer steel tank containing the metal core and paper insulated windings; oil which is part of the insulating system, and a gasket system which keeps the oil from getting into the environment;
- Bushings mounted to the top of the transformer tank, which connects the windings to the external electrical conductors;
- Radiators and cooling fans, which remove heat for the transformer's internal components;
- On-Load tap changer, which is a device attached internally or externally through which transformer voltages are maintained at acceptable levels; and

- Protective devices to ensure the safe operation of the transformer, such as gas detector relays, oil level and temperature relays, and gauges.

Figure 8 shows a picture of a 75 MVA, 230/66 kV power transformer at the Hardwoods Terminal Station.



Figure 8: Power Transformer

Transformers are expensive components of the electrical system. Hydro, like many North American utilities, is working to maximize and extend the life of its transformer by regularly assessing their condition; executing regularly schedule maintenance and testing and undertaking refurbishment or corrective actions as required. Transformers regularly undergo visual inspection as part of Hydro's terminal station inspection and scheduled preventive maintenance and testing, to identify concerns regarding the following transformer conditions:

- Insulating oil and paper deterioration;
- Oil moisture content;

- Oil leaks;
- Tank, radiators, and other component rusting/corrosion;
- Tap changer component wear or damage;
- Damaged/Deteriorated and PCB contaminated bushings;
- Failure of the protective devices; and
- Cooling fan failures.

Details on the assessment procedures and corrective action for each of these concerns are provided below.

Transformer Oil Deterioration

The insulating oil in a transformer and its tap changer diverter switch is a critical component of the insulation system. Normal operation of a transformer will cause its oil to deteriorate. Deterioration results from a number of causes such as heating, internal arcing of electrical components, or ingress of water moisture into the transformer. Deterioration of the oil will affect its function in the insulation system and may damage the paper component of the insulation system. Unacceptable levels of deterioration can affect the reliable operation of the transformer. To ensure that the oil in a transformer is of an acceptable quality, Hydro has an oil monitoring program, in which an oil sample is obtained annually from each transformer and analyzed by a professional laboratory. The test results are assessed to determine the level of deterioration. If an unacceptable level of deterioration is identified, required corrective action is identified by asset management personnel. This action entails either the refurbishment of the oil to improve its quality or the replacement of the oil.

Moisture Content

Oil samples are also analyzed to determine their moisture content. Moisture in a power transformer may be residual moisture, or may result from the ingress of atmospheric moisture. Oil and insulating paper with high moisture content has a reduced dielectric strength, and therefore its performance as an electrical insulator is diminished. To address transformers with high moisture content, Hydro will either install an online molecular sieve dry-out system (which circulates and dries the transformer oil without requiring an equipment outage) or perform a hot oil dry-out (which circulates and dries the transformer oil and requires an equipment outage).

Oil Leaks and Corrosion

Transformer oil leaks are an environmental hazard and as oil is part of the insulation system, unchecked leaks can affect the safe and reliable operation of a transformer. Leaks can be caused by a number of factors, including failed gaskets or severely corroded radiators, tank piping and other steel components. Transformers are visually inspected for leaks as part of the regularly scheduled terminal station inspection program and assessed by asset management personnel to determine the level of corrective action. Minor action, such as small repairs, patching, and minor painting is undertaken as part of the maintenance. Work requiring major refurbishments and replacements such as radiator or bushing replacements, gasket replacements and tank rusting refurbishment are undertaken under this program.

On-Load Tap Changer

On-Load tap changer diverter switches, which are externally mounted on the tank, adjust the voltage by changing the electrical connection point of the transformer winding. This involves moving parts, which are subject to wear and damage. Additionally, in older non-vacuum designed diverter switches, arcing occurs during the movement, leading to deterioration of the insulating oil. This wear and deterioration can lead to failure of the tap changer. Oil testing techniques have been developed by professional laboratories which provide assessments of the condition of the parts and oil. Oil samples are obtained annually from each on-load tap changer to perform a Tap Changer Activity Signature Analysis by the laboratory. This analysis provides a condition assessment of the tap changer oil and components. Hydro typically implements the laboratory's sampling interval recommendations. This ranges from continued or increased annual sampling, planned refurbishment, or immediate removal from service, inspection, and repair. The latter two activities are covered by this project. Another component covered by this project is to correct leaking seals between tap changer diverter switches and the transformer main tank. Currently Hydro has several transformers that show low levels of combustible gases such as acetylene, due to gasses migrating from the tap changer diverter switch compartment to the main tank.

Bushings

In addition to the aforementioned leaking bushings, Hydro must also address suspected bushings to have PCB levels not compliant with the latest PCB regulations, as well as bushings with degraded electrical properties.

The latest regulations state that all equipment remaining in service beyond 2025 must have a PCB concentration of less than 50 mg/kg. Hydro has approximately 450 sealed bushings that were manufactured prior to 1985 which are suspected to contain PCBs greater than 50 mg/kg. Some sealed bushings have sampling ports to allow sampling; however, Hydro does not sample due to small quantity of oil in bushings and the risk of contamination during sampling. Bushings which are known or suspected of having unacceptable PCB levels are replaced.

Hydro performs Power Factor testing on bushings every six years as part of the transformer preventive maintenance. When Power Factor results indicate unacceptable electrical degradation, bushings are scheduled for replacement.

Protective Devices and Fans

Protective devices and cooling fans are tested during visual inspections and preventive maintenance, and are replaced when they fail to operate as designed or their condition warrant replacement. In addition, cooling fans are added where additional cooling is required due to increased loads.

Online Oil Analysis

In addition to oil quality, dissolved gas analysis ("DGA") is performed on oil. DGA analyzes the levels of dissolved gases in oil, which provides insight into the condition of the transformer insulation. The presence of gases can indicate if the transformer has been subjected to fault conditions or overheating, or if there is internal arcing or partial discharge occurring in the windings. The annual oil sample test can only provide an analysis of transformer condition at the time when the sample is taken. In 2015, as part of this program, Hydro began installing online dissolved gas monitoring on generator step-up ("GSU") transformers, to allow real-time, continuous monitoring of dissolved gases in oil. This continuously monitors the transformer and provides early fault detection. Continuous data is also a useful tool for personnel to use to trend gases to help schedule repairs or replacement prior to in-service failures, improving the overall reliability of the Island Interconnected System. Continuous monitoring enables Hydro to reduce unplanned outages and lessen the probability of equipment in-service failure.

This program was extended to non-GSU transformers in 2017, with online DGA being installed on critical power transformers on the Island Interconnected System. The factors used to determine the criticality

score were submitted to the Board in the June 2, 2014 "Transformers Report."[3] Hydro has identified 49 transformers for installation of online DGA devices between 2019 and 2024.

4.1.7 Circuit Breaker Refurbishment and Replacements

The circuit breaker is a critical component of the power system. Located in a terminal station, each circuit breaker performs switching actions to complete, maintain, and interrupt current flow under normal or fault conditions. The reliable operation of circuit breakers through its fast response and complete interruption of current flow is essential for the protection and stability of the power system. The failure of a breaker to operate as designed may affect reliability and safety of the electrical system resulting in failure of other equipment and the occurrence of an outage affecting more end users. Hydro has over 230 terminal station circuit breakers in service with a voltage rating of 46 kV or greater.

Currently, Hydro maintains three different types of high-voltage circuit breakers:

1) Air blast circuit breakers ("ABCB"): use high-pressure air to interrupt currents and will be at least 38 years old at replacement. In the 2016 CBA Upgrade Circuit Breakers – Various Sites project, approval was obtained to replace ABCBs on an accelerated schedule by the end of 2020. This work is covered under a separate project and is not part of the work outlined in the Asset Management Overview. Hydro has since modified this program and is targeting completion in 2023.

2) Oil circuit breakers ("OCB"): use oil to interrupt currents and will be at least 36 years old at replacement. In the 2016 CBA Upgrade Circuit Breakers – Various Sites project, approval was obtained for the replacement of 10 OCBs up to 2020 which were not compliant with Environment Canada's PCB regulations. Hydro has since modified this program and is targeting completion of that scope in 2022. The remaining non-compliant breakers will be replaced before 2025. From 2017, any replacements not previously approved in the 2016 CBA will be included in the work conducted under this section of the Asset Management Overview.

3) Sulphur hexafluoride ("SF_6") circuit breakers: use SF_6 gas to interrupt current and installation of these breakers started in 1979 and continue for all new installations.

[3] Newfoundland and Labrador Hydro "Report to the Board of Commissioners of Public Utilities Regarding Work to be Performed on Transformers," July 2, 2014.



Figure 9: Circuit Breakers: ABCB (Left), Oil (Middle), and SF_6 (Right)

As presented in the 2016 CBA, Upgrade Circuit Breakers – Various Sites project, SF_6 circuit breakers rated at 138 kV and above are required to be refurbished after 20 years of service. In 2018 Hydro added 66 kV-rated breakers to also be refurbished after 20 years. Replacement of SF_6 circuit breakers rated at 66 kV and above will be planned after 40 years of service. However as SF_6 circuit breakers come due, a further condition assessment will be completed to determine if more life can be achieved through other means such as an overhaul. Some SF_6 circuit breakers may require replacement before the 40-year service life period based upon their condition and operational history. Hydro expects to replace an average of eight breakers and overhaul four breakers per year for the five year period for 2021 to 2025. As per the 2016 CBA, "Upgrade Circuit Breakers – Various Sites" project, Hydro does not currently overhaul breakers rated below 138 kV.

4.1.8 Station Service Refurbishment and Upgrades

The power required to operate the various terminal station and distribution substation, collectively referred to as "station" equipment and infrastructure, is provided by the Station Service System. The station service system provides ac and dc power to operate the equipment in a station.

The ac station service is generally supplied by one or more transformers in the station. Due to their criticality, 230 kV terminal stations have a redundant station service feed, feed either through a redundant transformer tertiary, supplied from Newfoundland Power's electrical system where available, or by a diesel generator. Common ac station service loads are:

- Transformer cooling fans;
- Anti-Condensation heaters;
- Station lighting;

- Control building HVAC;
- Control building lighting;
- Air compressors; and
- Battery chargers.

The dc station service is supplied by a battery bank which is charged from the ac station service. The dc station service provides power to critical devices in the station, and is designed to allow operation of the station in the event of an ac station service failure. Hydro's dc station service system is a 125 V system in the majority of the stations with some lower voltage stations and telecommunications equipment having 48 V systems. Common DC station service loads are:

- Circuit breaker trip and close circuits and charging motors;
- Protection relays;
- Emergency lighting;
- Disconnect switch motor operators for local/remote operation; and
- Telecommunications equipment.

As terminal station equipment is replaced, added, or upgraded, the ac and dc station service loads may increase. Upon the installation of new equipment in the terminal station, Hydro carries out a station service study to determine the loading on the station service system. In the event that the new station service loads exceed the design load of the system, upgrades such as cable, circuit breaker panel, splitter, and transfer switch replacements or additions are required. Replacement of station service transformers is not included in this program, as they are addressed separately in the CBA, under the Replace Power Transformers project, if required.

4.1.9 Battery Banks and Chargers

Battery banks and their chargers supply dc power to critical station infrastructure such as circuit breakers, protection and control relays, disconnect switch motor operators, and telecontrol equipment. Battery banks are designed to provide a minimum of eight hours of auxiliary power to critical infrastructure in the event of a loss of ac station service supply. The majority of Hydro's battery banks consist of lead-acid flooded-cell type batteries, whose capacity deteriorates over time. Hydro currently completes discharge testing on criticality A and B battery banks (after 10 years and then every five years

for flooded cell and every two years for valve regulated) and will plan replacements if the battery bank's capacity has fallen to 80% or less of its rated capacity. Also, due to the critical nature of battery banks, flooded cell batteries are replaced after 20 years while valve-regulated lead-acid batteries are replaced after 10 years.



Figure 10: 125 Vdc Terminal Station Battery Bank

4.1.10 Install Breaker Bypass Switches

High-voltage circuit breakers, with their associated protection and control equipment, are used to control the flow of electrical current to ensure safe and reliable operation of the electrical system. When a breaker is removed from service for maintenance, troubleshooting, refurbishment, or replacement, an alternate electrical path must be implemented to avoid customer outages. On radial systems,[4] this alternate path is accomplished using a bypass switch. When closed, the bypass switch allows electricity to flow around the breaker allowing the breaker to be safely de-energized, while maintaining service continuity.

[4] A radial system is an electrical network that has only one electrical path between the source and the load.

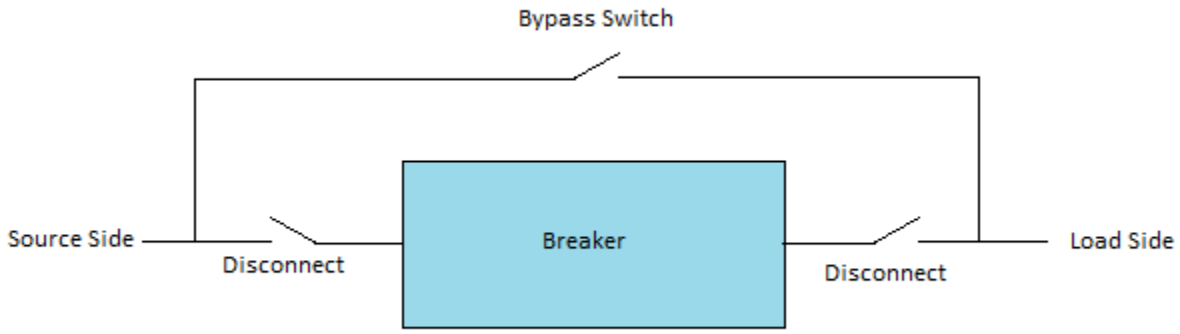

Figure 11: Example of Bypass Switch Installation

Listed in Table 1 are five radial systems, servicing multiple customers, where breakers are installed without bypass switches. In order to ensure service continuity during breaker downtime, Hydro is considering installation of breaker bypass as noted in Table 1.

Table 1: Circuit Breakers Without Bypass Switches

Breaker Location	Customers Affected
Bottom Waters L60T1	2253 Bottom Waters area customers
Buchans B2T1	665 Buchans area Newfoundland Power customers and Duck Pond Mine
Howley B1T2	773 Hampden and Jackson's Arm area customers and 665 Newfoundland Power Howley area customers
Peter's Barren B1L41	1900 Great Northern Peninsula customers north of Daniel's Harbor
South Brook L22T1	2340 South Brook area customers.

Hydro put a hold on this program in 2018 and is looking closer at only doing this work when other major terminal station work is planned or if there is a low cost solution. Doyles B1L15 had a low cost bypass installed in the first quarter of 2020 through an In Service Failure Project to facilitate the topping up of an ongoing leak in breaker B1L15.

4.1.11 Replace Station Lighting

Terminal station lighting is essential to provide adequate illumination for a safe working environment, as well as for deterring theft and vandalism in terminal stations. Hydro utilizes a variety of lighting technologies and configurations, depending on the application and vintage of the lighting system. Over time, exposure to the elements can cause physical deterioration, such as corrosion, leading to moisture ingress which impacts the function of the lighting system. Also some legacy lighting technologies have become obsolete.

Under this program, Hydro will replace deteriorated lighting systems as they become unable to provide adequate illumination of the terminal station and have become obsolete or beyond repair. Hydro will replace legacy lighting systems with modern, efficient lighting technologies whenever possible.



Figure 12: Corroded Ballast Requiring Replacement



Figure 13: Light Fixture Showing Perforations due to Corrosion, Enabling Moisture Ingress

4.1.12 Synchronous Condensers

Hydro maintains two synchronous condensers located at Wabush Terminal Station. Each condenser undergoes major and minor inspections on a three year rotating cycle, with minor inspections (Level I Condition Assessment) performed on both year one and year two of the cycle as an operating expense,, and a major inspection (Level II Condition Assessment) performed on year three as a capital expense. Each involves a standard list of checks, tests and general maintenance as well as any additional items that have been identified for follow-up based on the results of previous inspections.

The minor inspections involve function testing, vibrations checks, lube oil system maintenance and oil sampling, disassembly and inspection of top half of bearings, clearance checks, electrical tests, visual inspections, as well as cleaning and general maintenance including replacement of various gaskets,, filters and hardware.

The major inspections expand on the same activities performed under the minor inspections and also includes rotor and stator inspection, disassembly and inspection of the bottom half of the bearings and replacement of the thrust bearings.

4.2 Civil Works and Buildings

4.2.1 Equipment Foundations

Reinforced concrete foundations support high-voltage equipment and structures in Hydro's terminal stations. The majority of these structures formed part of the original station construction and support critical terminal station equipment and buswork.

The service life of galvanized steel structures varies depending on the operating environment, but can exceed 100 years, outliving the foundations on which they are built. A number of the foundations in Hydro terminal stations have deteriorated significantly due to repeated exposure to damaging freeze/thaw cycles, weathering, and age, leading to concerns over their integrity. Examples of degraded structure foundations are shown in Figure 14 and Figure 15.



Figure 14: Structure B1T1 Bottom Brook Terminal Station



Figure 15: Structure L01L37-1 Western Avalon Terminal Station

To ensure foundations perform as per the original design intent, severely deteriorated concrete foundations must be refurbished or replaced. Failure to complete repairs could result in a catastrophic failure, causing outages or personal injury. Hydro has carried out engineering inspections of all 230 kV stations and identified foundations requiring repairs. Additionally, Hydro performs visual inspections of foundations every 120 days during regular terminal station inspections. Foundations identified for repair are addressed under this program.

4.2.2 Fire Protection

Hydro's terminal station control buildings contain combustible materials. As these facilities are unattended, a fire could spread, causing severe damage to protection and control wiring and equipment which would cause extended and widespread outages. To restore of a terminal station severely damaged by fire to normal operation could take months.

Hydro is installing fire suppression systems in its 230 kV terminal stations to protect the control cabinets and cables and any other critical equipment from being destroyed by a fire, without damaging sensitive electronic equipment and wiring.

In the 2015 and 2016 CBAs Install Fire Protection projects, Hydro received approval to install fire protection in the Holyrood and Bay d'Espoir terminal stations respectively. Due to their criticality, Hydro intends to continue its program to install fire suppression systems in all 230 kV terminal stations.

4.2.3 Control Buildings

Terminal station control buildings contain critical station infrastructure such as protection, control, and monitoring equipment, telecontrol equipment, station service equipment, and compressed air systems. Many control buildings also contain office, breakroom, and washroom facilities, for use by Hydro crews when working in the station. As the equipment in control buildings is critical to the function of the terminal station, it is imperative that Hydro ensures the structural integrity, weather-tightness, and security of its control buildings. While addressing these issues, Hydro also ensures that building auxiliaries, such as electrical, plumbing, and HVAC systems function properly, to ensure reliable and safe operation and use of the terminal station and the control building.

Typical refurbishment activities for control building involve replacement of the roof membrane (Figure 16), siding, and doors (Figure 17), and may also include replacement of electrical equipment (such as distribution panels, transfer switches, or low-voltage disconnects), plumbing (such as water service entries and internal plumbing), and HVAC (such as intake and exhaust fans, louvers, heaters, and air conditioning equipment).

In 2016, Hydro submitted its "Upgrade Office Facilities and Control Buildings Condition Assessment and Refurbishment Program Asset Management Strategy Plan" in its 2017 CBA, which outlined Hydro's approach to address aging and failing building infrastructure. Beginning with the 2019 CBA, Hydro will undertake the refurbishment of control buildings under the Project.

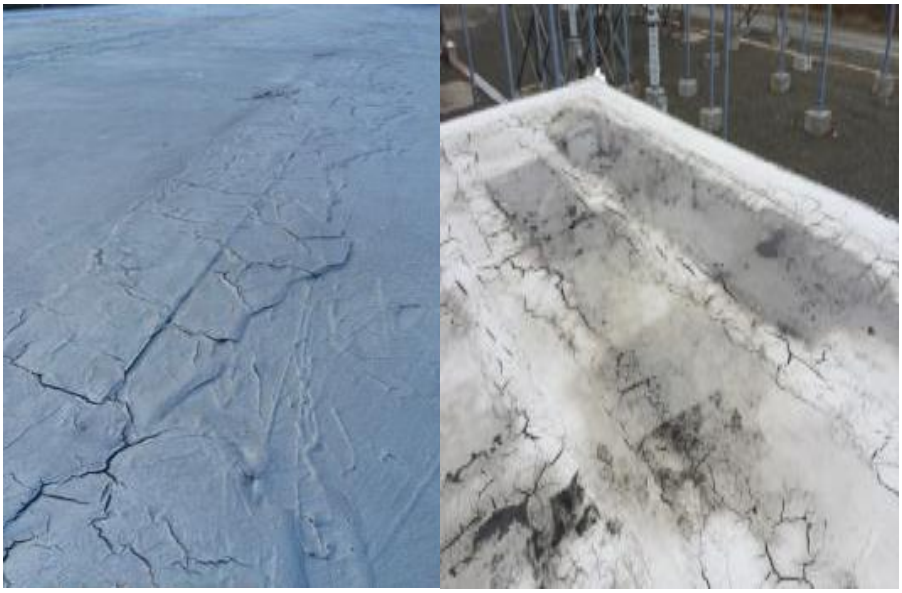

Figure 16: Terminal Station Control Buildings (Come by Chance and Sunnyside) Showing Cracking and Deterioration of the Roof Membrane System



Figure 17: Building Exterior Cladding and Exterior Doorways Displaying Severe Rusting and Deterioration

4.3 Protection, Control, and Monitoring

4.3.1 Protection and Control Upgrades and Refurbishment

The terminal station protection and control system automatically monitors, analyzes, and causes action by other equipment, such as breakers, to ensure the safe, reliable operation of the electrical system, or

to initiate action when a command is issued by system operators. The protection and control system also provides indications of system conditions and alarms, and allows the recording of system conditions for analysis. Hydro carries out capital work on various protection and control equipment, including:

- Protective relays;
- Breaker failure protection;
- Tap changer controls;
- Data alarm systems;
- Frequency monitors;
- Digital fault recorders; and
- Cables and panels.

Electromechanical and Solid State Protective Relay Replacement

Protective relays monitor and analyze the operation conditions of the electrical system. When a relay identifies unacceptable operating conditions, such as a fault, it will initiate an action to isolate the source of the condition by commanding high-voltage equipment such as breakers to operate. Protective relays play a crucial role in maintaining system stability and preventing hazardous conditions from damaging electrical equipment or harming personnel.

Older relays existing on Hydro's system are the electromechanical and older solid state types, and lack features such as data storage and event recording capability. Modern digital multifunction relays are used to replace these older style relays, as they have increased setting flexibility, fault disturbance monitoring, communications capability and metering functionality, and offer greater dependability and security, enhancing system reliability. Digital and electromechanical relays are showing in Figure 18.

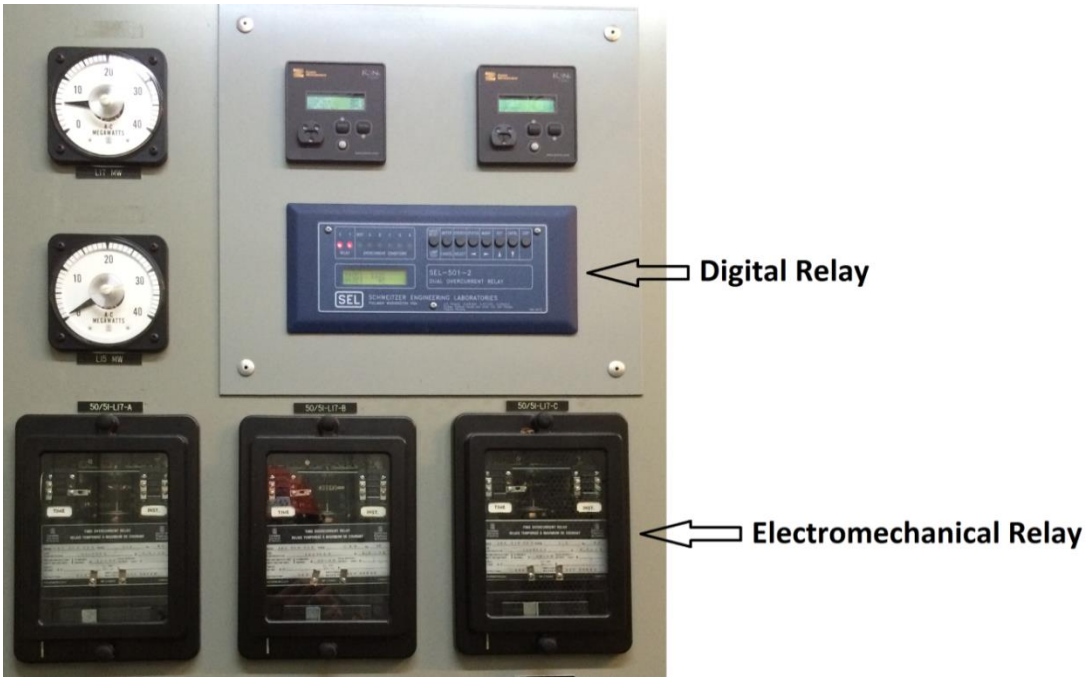

Figure 18: Digital and Electromechanical Relays

In the "Report to the Board of Commissioners of Public Utilities Related to Alarms, Event Recording Devices, and Digital Relays" dated August 1, 2014, Section 3.1 stated that "Hydro plans to review its existing transformer, bus, and line protections in an effort to develop plans for future implementation of modern digital relays with data storage and fault recording capabilities." To fulfill this commitment, Hydro completed the following:

- A review of all transformer, bus, and line protection on 230 kV, 138 kV, and 69 kV systems, including data storage and fault recording capabilities; and
- A plan to replace all existing electromechanical transformer, bus, timer, and line protection relays with modern digital relays. The 230 kV relays are the priority for the first phase of the plan, with 138 kV and 69 kV to follow.

As part of the annual Terminal Station Refurbishment and Modernization project, Hydro will continue to execute the replacement of 230 kV electromechanical and obsolete solid-state transformer, line, and bus relays with modern digital multifunction relays, which began in 2016 under the Replace Protective Relays Program. Additionally, in line with Hydro's response to CA-NLH-037 as part of the 2016 CBA, Hydro installed redundant multifunction transformer protection relays in 2016 for transformers rated above 10 MVA. Under this program Hydro will continue to install these upgrades.

Furthermore, starting in 2021 as part of the annual Terminal Station Refurbishment and Modernization project, Hydro plans to replace protection relays in the Wabush Terminal Station on 46 kV feeders. Each replacement is currently planned to coincide with the replacement of the circuit breaker associated with that protection.

Breaker Failure Protection

Protective relaying is designed to trip a breaker during fault conditions to remove the fault from the electrical system so as to minimize equipment outages and maintain system stability and safe, reliable operation. When a breaker does not properly isolate a fault, other breakers will be commanded to trip to isolate the fault. This will result in larger outages but will ensure isolation of the original fault in a time to minimize damage to equipment and minimize impact to the system. The failure of a breaker to isolate a fault when commanded is called a Breaker Failure.

Prior to 2014, breaker failure protection was implemented only in Hydro's 230 kV terminal stations. In 2014, Hydro completed a review of breaker failure protection in 66 kV and 138 kV terminal stations. Hydro also developed a protection and control standard "Application of Breaker Failure Relaying", calling for breaker failure protection on transmission breakers rated at 66 kV and above. From this review, Hydro identified 20 terminal stations requiring breaker failure protection.

As part of Hydro's 2016 CBA, Hydro proposed and received Board approval for the installation of breaker failure protection in three terminal stations. As part of the annual Terminal Station Refurbishment and Modernization Project, Hydro will continue its plan to execute the installation of breaker failure protection in the remaining terminal stations. As well, Hydro has identified concerns with the reliability of legacy breaker failure in 230 kV stations and will be replacing as necessary under this program.

Tap Changer Paralleling Control Replacement

Tap changer paralleling controls are designed to:

- Ensure the load bus voltage is regulated as prescribed by the setting;
- Minimize the current that circulates between the transformers, as would be due to the tap changers operating on inappropriate tap positions;

- Ensure the controller operates correctly in multiple transformer applications regardless of system configuration changes or station breaker operations and resultant station configuration changes.

Current tap changer controls are of similar vintage as the power transformers dating back to the late 1960's, and require replacement. Recent feedback from the tap changer paralleling control supplier indicated older equipment has capacitors that will dry out over time resulting in control issues. Additionally, it was recommended the same controller model be applied to all transformers to optimize tap changing control. The control issues as described by the supplier have been seen by Hydro staff at numerous sites.

Hydro started replacing tap changer paralleling controls in 2019 beginning at Western Avalon Terminal Station.

Equipment Alarm Upgrades

Alarms inform the Energy Control Centre ("ECC") and operating personnel that equipment and relaying requires attention, and are communicated to the ECC, and/or displayed locally on the station annunciator.



Figure 19: Annunciator Commonly Found in Hydro Terminal Stations

Hydro's review of Alarms, Event Recording Devices, and Digital Relays found that by providing more detailed alarm schemes, the ECC and local operators are able to troubleshoot system events more accurately and quickly.

Hydro's internal study identified required increases to alarm detail to the ECC for five 230 kV terminal stations. Stony Brook, Holyrood, Sunnyside, Oxen Pond, and Massey Drive were assessed. Hydro proposed and received approval to implement the proposed upgrades at the Stony Brook terminal station as part of the 2016 CBA "Upgrade Data Alarm Systems" project. Hydro will continue its plan to install improved data alarm management as part of the Terminal Station Refurbishment and Modernization project, with the remaining stations being addressed in future CBAs.

Frequency Monitoring Additions

As a result of investigations into the outage of January 2013, a recommendation was made to install frequency monitoring devices on the Island Interconnected System to allow better analysis of system events, such as pre and post-fault scenarios. It was recommended that one such device be installed in an Eastern, Western, and Central location on the Island Interconnected System. Hydro Place (East), Massey Drive Terminal Station (West), and Bay d'Espoir Terminal Station #2 (Central) have been chosen for the installation of frequency monitoring devices. This work was completed in 2018 and will be removed from this program.

Digital Fault Recorders

Digital Fault Recorders ("DFR") record analog electrical data, such as voltage, frequency, and current, as well as digital relay contact positions, at a high resolution to allow Hydro to determine the cause and location of an electrical fault. This data allows Hydro to restore service in a timely manner, address system configurations and settings to mitigate the impact of future faults, and improve the protection of critical electrical infrastructure. Hydro has DFRs deployed in several stations, and has a program to install DFRs in areas where Hydro does not have sufficient DFR coverage to allow the analysis of faults.

Protection and Control Cable and Panel Modifications

This program will cover protection and control panels and wiring that may require alteration, replacement, or addition to existing wiring due to deterioration from environment conditions, accidental damage or the modification/addition of protection and control equipment.

10. Upgrade Circuit Breakers – Various (2021–2022)



2021 Capital Budget Application

Upgrade Circuit Breakers - Various (2021–2022)

July 2020

A report to the Board of Commissioners of Public Utilities

newfoundland labrador hydro
a nalcor energy company

Executive Summary

This proposal is for the refurbishment and replacement of 46 kV, 66 kV, 138 kV and 230 kV circuit breakers. The refurbishment and replacement of the identified circuit breakers is required to ensure system reliability and safety, and, in the case of the oil circuit breakers, compliance with federal environmental regulations related to removing polychlorinated biphenyls ("PCBs").[1]

The circuit breakers selected for refurbishment and replacement in 2021 and 2022 are part of Hydro's long-term asset management plan for circuit breaker replacement and refurbishment. The circuit breakers proposed for refurbishment and replacement in this project were identified using a similar methodology as that reflected in Hydro's previous five-year Upgrade Circuit Breakers project, which was approved by the Board in 2015 as part of Hydro's 2016 Capital Budget Application.[2] Air blast breakers and oil circuit breakers will be replaced due to their age, condition, reliability concerns, and, in some instances, for compliance with federal environmental legislation. They will be replaced with sulphur hexafluoride circuit breakers. The sulphur hexafluoride circuit breakers identified for refurbishment are approximately half-way through their existing useful life, or have been identified as requiring refurbishment based on their condition.

This proposal is for a two-year project to complete the necessary upgrades and is expected to cost approximately $11,532,700.

[1] The *Canadian Environmental Protection Act* includes PCB Regulations (SOR/2008-273) which provide end-of-use dates for various concentrations of PCBs.
[2] Report provided in "2016 Capital Budget Application," Newfoundland and Labrador Hydro, vol 2, tab 8. Approved in Board Order No. P.U. 33(2015).

Contents

Executive Summary i
1.0 Introduction 1
2.0 Background 1
2.1 Existing System 1
2.2 Operating Experience 2
3.0 Justification 3
4.0 Analysis 3
4.1 Identification of Alternatives 3
4.2 Evaluation of Alternatives 3
4.2.1 Deferral 3
4.2.2 Proceed with Refurbishments and Replacements 3
4.3 Recommended Alternative 4
5.0 Project Description 4
6.0 Conclusion 6

1.0 Introduction

Circuit breakers are critical components of the power system. Located in terminal stations, circuit breakers perform switching actions which are necessary to complete, maintain, and interrupt current flow under normal or fault conditions. The reliable operation of circuit breakers is essential to protect and maintain the stability of the power system.

2.0 Background

2.1 Existing System

Hydro currently maintains three different types of circuit breakers, which operate at three voltage levels.[3] The three types of circuit breakers are as follows:

1) Air blast;
2) Oil; and
3) Sulphur hexafluoride.

Each type of circuit breaker has unique operating characteristics. Air blast circuit breakers offer features such as fast response and automatic reclosing. They are widely used where repeated operation is essential. Unlike air blast circuit breakers, which uses air to extinguish the current arc created inside the circuit breaker, oil circuit breakers extinguish the arc using insulating oil. Sulphur hexafluoride circuit breakers are the newest design. They use sulphur hexafluoride gas, which has dielectric properties, to extinguish electrical arcs created during switching. The utility industry is trending towards the use of sulphur hexafluoride circuit breakers due to their availability and desirable operating characteristics of the new technology.

Circuit breakers are comprised of two primary components:

1) An interrupting device, which includes the arc quenching medium; and
2) The insulating material and the operating mechanism.

[3] The three voltage levels of circuit breakers are 66/69 kV, 138 kV and 230 kV. 46 kV circuit breakers are in the same voltage class of equipment as 66/69 kV circuit breakers.

Air blast circuit breakers, oil circuit breakers and sulphur hexafluoride circuit breakers are designed and constructed differently and, as such, refurbishment requirements vary for each type of circuit breaker. For air blast circuit breakers, both the interrupting device and operating mechanism require a mid-life refurbishment of seals, O-rings, and lubrication. The operating mechanism in sulphur hexafluoride circuit breakers typically require refurbishment at approximately 20 years (i.e., halfway through the expected useful life) as the interrupter is a sealed unit. Oil circuit breakers must be replaced rather than refurbished due to environmental legislation requiring removal of PCBs,[4] which are contained in the bushings of oil circuit breakers.

As of the end of 2019, Hydro had 13 air blast circuit breakers, 181 sulphur hexafluoride breakers and 31 oil circuit breakers in its 46 kV and above circuit breaker fleet. Within the circuit breaker fleet, Hydro has 52 circuit breakers in service that range from 38 to 58 years of age. A number of the circuit breakers within Hydro's system have been operational for more than 30 years with a significant number nearing or already surpassed the expected useful life of such assets.[5] The probability of circuit breaker failure increases with age.

2.2 Operating Experience

Following the January 2014 power outages, Hydro developed a plan to accelerate the replacement of air blast circuit breakers. The plan also indicated that overhauls of sulphur hexafluoride circuit breakers will be completed at approximately 20 years and that they would be replaced at or near 40 years. In accordance with this plan, Hydro's 2016 Capital Budget Application included a five-year budget for the execution of breaker related work that concludes in 2020.

Hydro's long-term plan includes: (i) the replacement of air blast circuit breakers by the end of 2023 due to reliability issues, (ii) replacement of oil circuit breakers by the end of 2025 to ensure compliance with federal environmental legislation, (iii) the overhaul of sulphur hexafluoride circuit breakers after 20 years of service, and (iv) the consideration of replacement of sulphur hexafluoride circuit breakers after approximately 40 years of service, based on their condition at that time.

[4] The *Canadian Environmental Protection Act* includes PCB Regulations (SOR/2008-273) which provide end-of-use dates for various concentrations of PCBs.
[5] Expected useful life is typically estimated to be 40 to 55 years, depending on the type of circuit breaker.

3.0 Justification

This project is required for Hydro to provide safe, reliable electrical service, and to comply with federal PCB regulations. For reliability purposes, air blast circuit breakers will not be refurbished and are scheduled for replacement by 2023. To comply with federal PCB regulations, oil circuit breakers will not be refurbished and are scheduled for replacement prior to 2025. To ensure the appropriate balance between cost and reliability for customers, Hydro is focused on optimizing the useful life of its in-service sulphur hexafluoride circuit breakers. As such, refurbishment is typically scheduled after 20 years of service and replacement is planned to occur at approximately 40 years of service, depending on the condition and operational history of the circuit breaker.

4.0 Analysis

4.1 Identification of Alternatives

The following alternatives were considered:

- Deferral; and
- Proceed with refurbishments and replacements.

4.2 Evaluation of Alternatives

4.2.1 Deferral

The sulphur hexafluoride circuit breakers that are proposed for refurbishment are at or near the mid-point of their expected useful lives. The oil circuit breakers proposed for replacement are required to support Hydro's compliance with federal environmental regulations that require removal by 2025. The air blast circuit breakers that are proposed for replacement are either nearing the end of their expected useful lives or have been identified as requiring replacement due to their condition. The continued operation of these units without the required intervention increases the risk of failure and/or legislative non-compliance. Therefore, deferral of the proposed refurbishment and replacements is not a viable alternative.

4.2.2 Proceed with Refurbishments and Replacements

The refurbishment and replacement of circuit breakers in a planned, strategic manner as outlined in this proposal is prudent. Such an approach enables Hydro to manage resource requirements and system outages in a way that supports its mandate to provide least-cost, reliable service.

4.3 Recommended Alternative

Hydro recommends the refurbishment and replacement of circuit breakers as proposed. This approach is consistent with the methodology and philosophy outlined in Hydro's long-term plan.

5.0 Project Description

This project includes the refurbishment and replacement of select 46 kV, 66/69 kV, 138 kV, and 230 kV circuit breakers. Two refurbishments and five replacements are planned for 2021 and four refurbishments and nine replacements are planned for 2022. The scope of work also includes upgrades to the station service at the Wabush Terminal Station to accommodate the new breakers.

Table 1: 2021 Circuit Breakers Planned for Refurbishment or Replacement

2021 Refurbishments	Voltage	2021 Replacements	Voltage
St. Anthony Airport B1C1	69 kV	Stony Brook B3L133	138 kV
St. Anthony Airport B1C2	69 kV	Stony Brook L05L31	230 kV
		Happy Valley 13-1	138 kV
		Deer Lake B2T1	66 kV
		Oxen Pond B2B5	66 kV

Table 2: 2022 Circuit Breakers Planned for Refurbishment or Replacement

2022 Refurbishments	Voltage	2022 Replacements	Voltage
Hardwoods B8B9	69 kV	Wabush Terminal Station 46-4	46 kV
Hardwoods B8C2	69 kV	Bay d'Espoir B13T11	66 kV
Oxen Pond B2C2	69 kV	Massey Drive B3T3	66 kV
Hardwoods B8T4	69 kV	Holyrood B6L3	66 kV
		Wabush Terminal Station 46-13	46 kV
		Wabush Terminal Station 46-23	46 kV
		Stony Brook B3L130	138 kV
		Stony Brook B3L22	138 kV
		Wabush Terminal Station 46-28	46 kV

The estimate for this project is shown in Table 3.

Table 3: Project Estimate ($000)

Project Cost	2021	2022	Beyond	Total
Material Supply	1,480.0	782.0	0.0	**2,262.0**
Labour	1,199.6	1,227.7	0.0	**2,427.3**
Consultant	468.0	755.2	0.0	**1,223.2**
Contract Work	1,724.0	2,392.0	0.0	**4,116.0**
Other Direct Costs	66.6	34.9	0.0	**101.5**
Interest and Escalation	233.6	662.6	0.0	**896.2**
Contingency	247.0	259.5	0.0	**506.5**
Total	**5,418.8**	**6,113.9**	**0.0**	**11,532.7**

1 The anticipated project schedule is shown in Table 4.

Table 4: Project Schedule

Activity	Start Date	End Date
Planning:		
Open project/initial planning/scheduling	January 2021	February 2021
Detailed Design (Year 1):		
Conduct site visits/complete detailed design	January 2021	February 2021
Procurement (Year 1):		
Order Breakers		
Tender and award contract(s) for Year 1 overhauls		
Tender and award contract(s) for Year 1 breaker replacements		
Award consultant engineering contract(s) for Year 1	February 2021	April 2021
Construction/Commissioning (Year 1):		
Year 1 breaker replacements and overhauls	April 2021	October 2021
Detailed Design (Year 2):		
Conduct site visits		
Complete detailed design	November 2021	January 2022
Procurement (Year 2):		
Tender and award contract(s) for Year 2 overhauls		
Tender and award contract(s) for Year 2 breaker replacements		
Award consultant engineering contract(s) for Year 2		
Tender and award contract for the Wabush Terminal Station AC station service upgrades	February 2022	April 2022
Construction/Commissioning (Year 2):		
Year 2 breaker replacements and overhauls		
Wabush Terminal Station AC station service upgrades	April 2022	October 2022
Closeout:		
Project completion/closeout	November 2022	December 2022

6.0 Conclusion

This proposal is seeking approval for the circuit breakers due for refurbishment and replacement in 2021 and 2022. The refurbishment and replacement of the identified circuit breakers is required to ensure system reliability, safety, and compliance with federal environmental regulations.

11. Wood Pole Line Management Program (2021)



2021 Capital Budget Application

Wood Pole Line Management Program (2021)

July 2020

A report to the Board of Commissioners of Public Utilities

newfoundland labrador hydro
a nalcor energy company

Executive Summary

The Wood Pole Line Management Program is a condition-based program that uses reliability-centered maintenance principles and strategies.[1] Under the program, data from transmission line inspections is analyzed on an annual basis and recommendations are made, as required, for refurbishment or replacement of line components, including poles, structures, hardware, and conductors. Recommended work is completed in the subsequent year. Inspection data and refurbishment or replacement of assets is recorded in a centralized database which is used for future analysis and tracking.

The purpose of the Wood Pole Line Management Program is to detect and treat deteriorating wood poles and line components before the integrity of a structure is jeopardized. If the deterioration of the structure or components is not detected early, the reduced integrity of the structure could affect the reliability of the line. It could also lead to increased failure costs and, potentially, customer interruptions. Safety issues and hazards for Newfoundland and Labrador Hydro ("Hydro") personnel and the general public could also result from wood poles which have weakened structural integrity.

If approved, the work planned for 2021 is expected to cost approximately $2,896,900.

[1] Reliability-centered maintenance is a maintenance strategy that is implemented to optimize the maintenance program of a company or facility.

Contents

Executive Summary 1
1.0 Introduction 3
2.0 Background 3
2.1 Existing System 3
3.0 Justification 5
4.0 Project Description 6
4.1 Historical Information 7
4.1.1 Historical Expenditures 7
4.1.2 Historical Replacement Information 7
4.2 Review of 2019 Wood Pole Line Management Program 8
4.3 Update of 2020 Wood Pole Line Management Program 10
4.4 Budget Estimate 11
4.5 Project Schedule 12
5.0 Conclusion 12

List of Appendices

Appendix A: Wood Pole Line Management Inspection Schedule 2020–2025

1.0 Introduction

As wood poles age, their preservative retention levels decrease and the poles become increasingly vulnerable to deterioration by different agents, including fungi and insects. Wood poles must be regularly inspected and treated to proactively identify and assess deterioration.

The Wood Pole Line Management Program is an annual program that promotes early detection of deteriorated poles and other line components. Early detection is required to avoid potential safety hazards and identify poles that are at early stages of decay to ensure that corrective measures can be taken to extend the expected useful life of the poles. This program is a least-cost strategy to wood pole line management, as investments made in regular inspection and early detection of issues extends the useful life of the poles, supports the deferral of line reconstruction, and prevents forced outages.

2.0 Background

Newfoundland and Labrador Hydro ("Hydro") first initiated the Wood Pole Line Management Program as a pilot study in 2003 and subsequently determined that the program should continue as a long-term asset management and life extension program. The Wood Pole Line Management Program was presented to the Board of Commissioners of Public Utilities ("Board") as part of Hydro's 2005 Capital Budget Application and was entitled "Replace Wood Poles – Transmission."

2.1 Existing System

Hydro maintains approximately 2,300 km of wood pole transmission lines operating at voltages of 69 kV, 138 kV, and 230 kV. These lines consist of over 23,000 poles of varying ages from new to 55 years old. As of 2020, approximately 95% of Hydro's transmission pole assets are more than 20 years old; approximately 55% are more than 40 years old.

Prior to 2003, Hydro's pole inspection and maintenance practices followed the traditional utility approach of sounding inspections only. In 1998, Hydro began to collect core samples from select poles to test for preservative retention levels and pole decay. The results of early tests raised concerns regarding the general preservative retention levels in the poles. This testing confirmed that there were poles in Hydro's system that had a preservative level below that which is necessary to maintain the required design criteria. During this period, certain poles were replaced because the preservative level had decreased to the point that decay had advanced and the pole was no longer structurally sound.

These inspections and the analysis of the data confirmed that a more rigorous wood pole line management program was required.

Figure 1 illustrates typical wood pole inspection techniques conducted in the Wood Pole Line Management Program. Figure 2 provides examples of wood pole inspection results.



Figure 1: Wood Pole Line Management Inspection Techniques. Clockwise from Bottom Left: (1) Field Data Collector, (2) Installing Boron Treatment, (3) Climbing Inspection, (4) Destructive Testing at Memorial University of Newfoundland



Figure 2: Examples of Wood Pole Inspection Results

Hydro's experience with the Wood Pole Line Management Program has demonstrated that the expected useful life of transmission lines can be extended by more than 15 years through early inspection and maintenance.

The anticipated useful life of a wood pole transmission line that is not subject to inspection or maintenance is approximately 40 years. As of 2020, Hydro has 22 wood pole transmission lines that have surpassed this anticipated useful life. Of these lines, 18 are over the age of 45 years, with the oldest wood pole line having been installed 55 years ago in 1965. The extension of the useful life of these poles can be attributed to the inspection, treatment, and refurbishment that Hydro has conducted on the transmission lines. For details, please refer to "Interim Report – Review of the Current WPLM Program"[2] and "Progress Report #2 (2012–2017) Review of the Current Wood Pole Line Management (WPLM) Program."[3]

3.0 Justification

There are no alternatives to undertaking the activities outlined in this program. The program employs a balanced ten-year inspection cycle that includes inspection, treatment, and replacement, as required, following reliability-centered maintenance principles. Deferral of the program would be detrimental to program execution, effectiveness, and resource balancing.

In 2005, the Board determined that this approach was justified and prudent, stating:

> This approach is a more strategic method of managing wood poles and conductors and associated equipment and is persuaded that the new WPLM Program, based on RCM principles, will lead to an extension of the life of the assets, as well as a more reliable method of determining the residual life of each asset. One of the obvious benefits of RCM will be to defer the replacement of these assets thereby resulting in a direct benefit to the ratepayers.[4]

[2] Filed as part of Hydro's "2013 Capital Budget Application," revised August 31, 2012, vol. II, tab 17, app. B (originally filed August 8, 2012). <http://pub.nl.ca/applications/ARCHIVE/NLH2013Capital/files/application/NLH2013Application-WoodPoolLineMgt.pdf>.
[3] Filed as part of Hydro's "2019 Capital Budget Application," July 31, 2018, vol. I, 2019-2023 Capital Plan, app. C. <http://pub.nl.ca/applications/NLH2019Capital/applications/2019%20CBA%20-%20Volume%201%20-%20Rev%201%20-%202018-10-09.PDF>
[4] Order No. P.U. 53 (2004) at p.23/13-18.

Hydro committed to provide the Board with annual updates on the program, including progress summaries of the work completed to date and a forecast of future program objectives. The update is provided in this report.

4.0 Project Description

The Wood Pole Line Management Program is a condition-based program that uses the basic principles and strategies of reliability-centered maintenance. Under the Wood Pole Line Management Program, data from transmission line inspections is analyzed on an annual basis and recommendations are made for refurbishment or replacement of deteriorated line components including poles, structures, hardware, and conductors. Recommended work is generally completed in the subsequent year; however, in cases where components are deemed unable to last another year, Hydro replaces or refurbishes issues in the current year. Such replacements are managed within the existing budget.

The purpose of the Wood Pole Line Management Program is to detect and treat deteriorating wood poles and line components before the integrity of the structures is jeopardized. If the deterioration of the structures or components is not detected early, the reduced integrity of the structure could affect the reliability of the line and present safety issues and hazards for Hydro personnel and the general public.

The Wood Pole Line Management Program inspection schedule generally plans to complete older lines first and works toward newer lines. The specific lines and the number of poles included in the program are reviewed on an annual basis and may be modified based on the following criteria: age; priority (radial or redundant); and known problems.

Sufficient long-term data derived from two complete ten-year inspection cycles will be required before Hydro can provide the quantitative benefits of the Wood Pole Line Management Program on transmission line reliability. The second Wood Pole Line Management inspection cycle is scheduled for completion by 2023. In the absence of long-term data, transmission line performance during recent ice storms may provide an indication of how the Wood Pole Line Management Program is impacting reliability.

In March 2008, there was a severe ice storm on the Avalon Peninsula. Hydro's test site at Hawke Hill recorded more than 25 mm of radial glaze ice, which exceeds the design load of the wood poles on the

Avalon Peninsula. As the poles which were not structurally sound had been replaced during the first Wood Pole Line Management inspection cycle between 2003 and 2007, there were no reported failures. Additionally, there were no failures of Hydro's wood pole assets on the Avalon Peninsula in the ice storm of March 2010. The performance of these lines during ice storm conditions supports Hydro's continued proactive condition-based management program.

4.1 Historical Information

4.1.1 Historical Expenditures

The five-year historical cost information for the Wood Pole Line Management Program and the budget for 2020 are provided in Table 1.[5]

Table 1: Historical Wood Pole Line Management Program Expenditures ($000)

Year	Budget (A)	Actuals (B)	Difference (C) = (B) – (A)
2020	2,792.7	n/a	n/a
2019	2,467.0	2,873.4	406.4
2018	3,532.9	3,185.6	(347.3)
2017	2,404.1	3,234.7	830.6
2016	2,919.0	3,180.0	261.0
2015	2,830.6	3,058.5	227.9

4.1.2 Historical Replacement Information

Table 2 and Table 3 provide the statistics for pole and pole component replacement for the five-years prior to implementation of the Wood Pole Line Management Program and for the years since implementation of the program.

[5] Per-unit information is not available, as work is not defined by unit (e.g., line or structure number). The work completed varies based on the actual condition of the asset. In most cases, the work completed on any one structure is not related to the work on the next structure (e.g., one structure may require a pole replacement and the next structure may need a crossarm or an insulator replacement). The same is true for a breakdown by individual transmission line, where the cost will be affected by the configuration, voltage, age, and geographical location of the line.

Table 2: Annual Statistics of Pole and Pole Component Replacement

Year	Poles	Cross Arms	Knee Bracing	Cross Bracing
2019	32	26	7	9
2018	29	19	1	9
2017	31	32	36	76
2016	38	39	28	23
2015	50	14	15	5
2014	57	11	10	6
2013	34	8	88	8
2012	32	14	4	4
2011	53	19	80	22
2010	60	20	45	58
2009	81	12	14	25
2008	93	27	27	25
2007	97	31	11	19
2006	142	30	18	21
2005	98	47	43	58
2004[6]	51	13	12	22
2003	31	29	13	55
2002	126	53	6	61
2001	21	16	2	2
2000	44	30	21	30
1999	135	7	20	2
Total	**1,335**	**497**	**501**	**540**

Table 3: Statistics of Pole and Pole Component Replacement

Period	Poles	Cross Arms	Knee Bracing	Cross Bracing	Comments
1999 to 2003	357	135	62	150	Five Years Before Wood Pole Line Management
2004 to 2019	978	362	439	390	Sixteen Years Since Wood Pole Line Management

4.2 Review of 2019 Wood Pole Line Management Program

One of the objectives of the 2019 program was to inspect, test and treat 2,629 poles and associated line components. Table 4 summarizes the 2019 inspections.

[6] Wood Pole Line Management Program began in 2004.

Table 4: 2019 Inspections Completed

Regions	Line Name	Year In Service	Voltage Level	Planned Number of Poles to Inspect	Actual Number of Poles Inspected	Percent Complete
Eastern	TL 219	1990	138 kV	371	377	102%
Central	TL 220	1970	69 kV	231	227	98%
	TL 223	1966	138 kV	176	173	98%
	TL 233	1973	230 kV	240	241	100%
	TL 252	1981	69 kV	235	253	108%
Western	TL 215	1969	69 kV	150	440	293%
Northern	TL 226	1970	69 kV	200	188	94%
	TL 229	1976	69 kV	129	104	81%
	TL 239	1982	138 kV	63	61	97%
	TL 241	1983	138 kV	60	59	98%
	TL 256	1996	138 kV	53	29	55%
	TL 257	1989	69 kV	220	199	90%
Labrador	TL 240	1976	138 kV	501	0	-
Totals				**2,629**	**2,351**	**89%**

The 2019 inspection plan included 501 poles on transmission line TL240 in Labrador,[7] all on the L1301 section of the line (Churchill Falls Terminal Station to Muskrat Falls Tap Station). Due to the approval of the Muskrat Falls to Happy Valley Goose Bay Interconnection Project,[8] the planned inspection of transmission line L1301 was cancelled. The 2019 inspection plan was also modified to include the inspection of 290 poles on transmission line TL215 in Western Newfoundland.

Another objective of the 2019 Wood Pole Line Management Program was the refurbishment of defective components identified in previous inspections. A summary of the work completed in 2019 is provided in Table 5.

[7] Transmission line TL240 is Hydro's former designation of the 138 kV transmission line between the Churchill Falls Terminal Station and the Happy Valley Terminal Station. The line numbering was changed to L1301 (Churchill Falls Terminal Station to the Muskrat Falls Tap Station) and L1302 (Muskrat Falls Tap Station and Happy Valley Terminal Station). Both transmission lines L1301 and L1302 together cover the entirety of transmission line TL240.
[8] Approved in Board Order No. P.U. 9(2019) on March 5, 2019.

Table 5: Summary of 2019 Refurbishment

Component	Region				Total
	Eastern	Central	Western	Northern	
Poles	13	-	16	3	**32**
Cross arms	9	1	1	15	**26**
Cross bracing	9	-	-	-	**9**
Knee bracing	6	1	-	-	**7**
Foundations	1	-	1	1	**3**
Miscellaneous (Insulators, hardware, etc.)	70	6	12	37	**125**

The total expenditure of $2.9 million was approximately $400,000, or 16%, over the budget estimate of $2.5 million. This can be primarily attributed to the deferral of refurbishment work on transmission line TL203 from 2018 to 2019 due to the unavailability of outages on the line in 2018. This work was completed in March 2019 and included the replacement of 11 poles, 9 cross arms, 5 sets of cross bracing, 7 sets of knee bracing, 1.5 km of overhead ground wire, and other miscellaneous items.

4.3 Update of 2020 Wood Pole Line Management Program

The inspection and treatment work scheduled for 2020 is summarized in Table 6. This work is scheduled to be executed between June 2020 and October 2020.

Table 6: 2020 Inspection Plan

Region	Line No.	Year Built	Age of Line	Target Number of Poles to Inspect
Eastern	TL 219	1990	30	325
Central	TL 220	1970	50	170
	TL 233	1973	47	410
	TL 251	1981	39	119
	TL 254	1988	32	216
Western	TL 209	1971	49	183
	TL 243	1978	42	159
Northern	TL 226	1970	50	253
	TL 227	1970	50	48
	TL 257	1988	32	480
Total				**2,363**

A program to refurbish the issues identified in the 2019 inspection program began in spring 2020 and will continue into fall 2020. This includes the replacement of 26 poles, 49 crossarms, 6 sets of cross bracing, 7 sets of knee bracing, and other components. A list of the refurbishment work scheduled for completion in 2020 is provided in Table 7.

Table 7: 2020 Refurbishment Plan

Component	Region				Total
	Eastern	Central	Western	Northern	
Poles	-	10	16	-	**26**
Cross arms	1	42	2	4	**49**
Cross bracing	-	6	-	-	**6**
Knee bracing	-	7	-	-	**7**
Foundations	1	2	1	1	**5**
Miscellaneous (Insulators, hardware, etc.)	31	38	19	34	**122**

4.4 Budget Estimate

The project estimate shown in Table 8 includes the inspection and treatment of the lines identified for 2021 and the estimated costs of refurbishment or replacement of poles in 2021 which are identified as requiring such work through the 2020 inspections.

The 2020 inspections were not complete as of the date this report was completed. To establish a projected cost of refurbishment or replacement, a percentage of poles inspected are assumed to be requiring refurbishment or replacement based on the IOWA curve (shown in Appendix A) depending on their age and group.[9] Poles rejected in the field will be analyzed with respect to reliability issues, and if rejected after structural analysis, a recommendation to refurbish or replace will be made.

Using the IOWA curve, the anticipated pole replacement rate is calculated and used to estimate the future refurbishment costs. A schedule of the pole inspections from 2020–2025 is provided in Appendix A. Table A-1 also provides the anticipated pole rejection rate for each year.

[9] Iowa curves display functional failures or retirements of asset classes. They were developed in a study at the University of Iowa. Each curve represents a probability distribution and has a series of attributes. The curves support realistic forecasting of the remaining life of groups of assets.

The Wood Pole Line Management Program budget for 2022 and beyond will be established in future Capital Budget Applications.

Table 8: Project Estimate

Project Cost	2021	2022	Beyond	Total
Material Supply	159.3	0.0	0.0	**159.3**
Labour	1,709.1	0.0	0.0	**1,709.1**
Consultant	100.0	0.0	0.0	**100.0**
Contract Work	234.1	0.0	0.0	**234.1**
Other Direct Costs	479.9	0.0	0.0	**479.9**
Interest and Escalation	139.2	0.0	0.0	**139.2**
Contingency	75.3	0.0	0.0	**75.3**
Total	**2,896.9**	**0.0**	**0.0**	**2,896.9**

4.5 Project Schedule

The annual project schedule involves many transmission lines and is dependent on the annual work load and availability of outages. Work scheduled for 2021 will commence as early in the year as system conditions allow. The schedule is determined during the spring of each year.

5.0 Conclusion

The Wood Pole Line Management Program is an important part of Hydro's ongoing maintenance. It is aligned with Hydro's responsibility to provide safe and reliable service to customers at the lowest possible cost. Therefore, Hydro proposes to continue the Wood Pole Line Management Program in 2021.

Appendix A

Wood Pole Line Management Inspection Schedule 2020–2025

newfoundland labrador hydro
a nalcor energy company

Table A-1: Wood Pole Line Management Inspection Schedule and Expected Pole Rejection Rates (Summary)

Year	No. of Poles Inspected	Estimated Approximate Pole Rejection Rate	Estimated No. of Poles Rejected
2020	2,363	1.9%	46
2021	2,453	0.9%	22
2022	2,186	1.2%	27
2023	2,369	2.7%	65
2024	2,205	3.4%	74
2025	2,000	3.9%	77

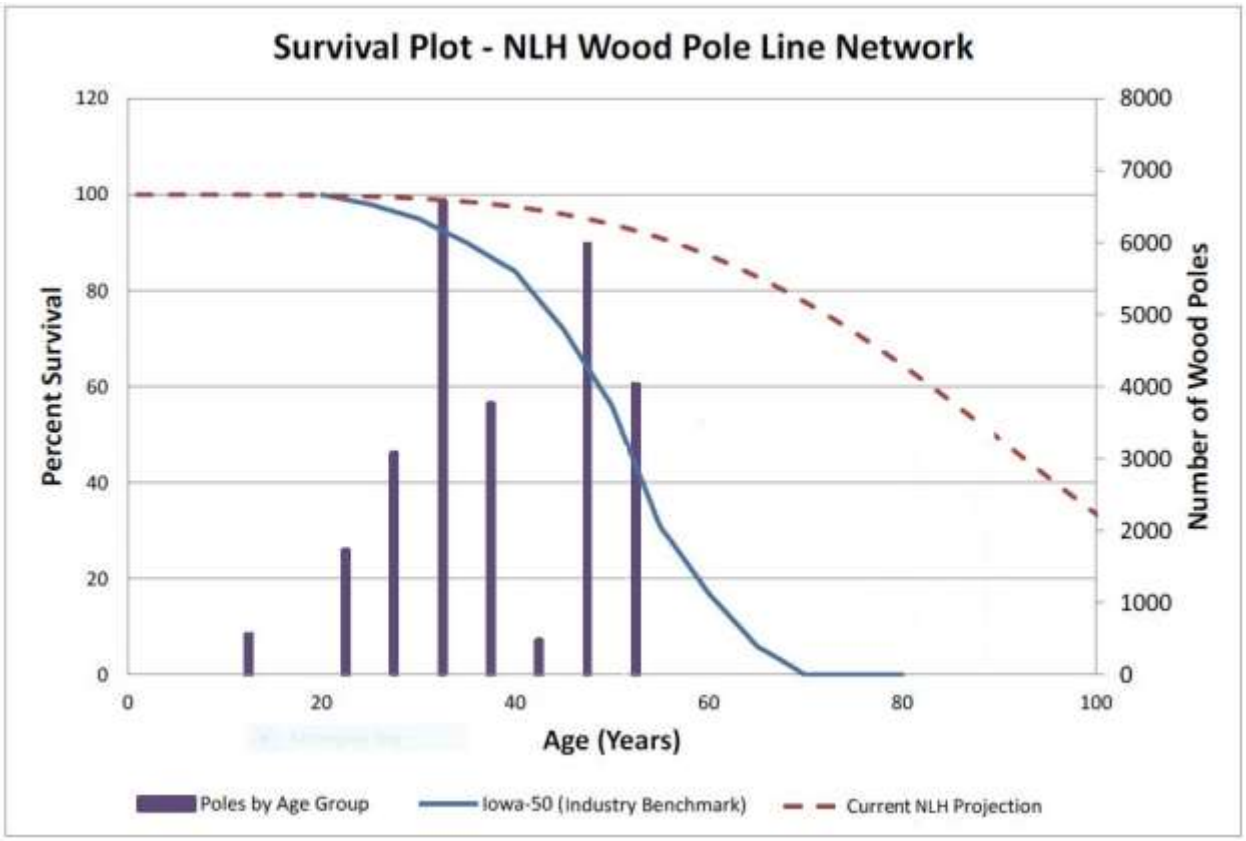

Figure A-1: IOWA Curve

12. Diesel Genset Replacements (2021–2022)

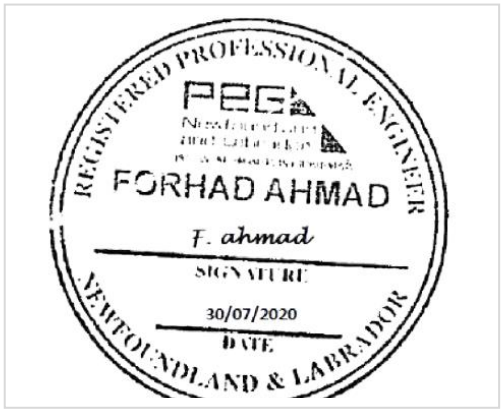

2021 Capital Budget Application

Diesel Genset Replacements (2021–2022)

July 2020

A report to the Board of Commissioners of Public Utilities

newfoundland labrador hydro
a nalcor energy company

Executive Summary

The community of Nain is located on the North coast of Labrador where Newfoundland and Labrador Hydro ("Hydro") provides electrical service to approximately 500 customers. Electricity is supplied by Hydro's diesel generating station, which currently contains four diesel generating units ("gensets"). The load profile in Nain has been increasing steadily over the past decade.

Unit 574 in Nain is an 865 kW Detroit Diesel genset, which was installed in 2002 when the generating station was constructed. Since 2015, the genset has experienced a persistent overheating problem. As a result, the genset was derated to 550 kW, which is a violation of Hydro's firm capacity requirements for remote diesel generating stations. After many consultations with the manufacturer and incurring repeated high maintenance costs with extended unit outages, Hydro has decided it is not feasible to continue operating this unit.

Hydro is proposing the replacement of Unit 574 with a larger 925 kW genset to maintain reliable operation of the Nain Diesel Generating Station ("Nain DGS").

This project estimate is $3,085,600.

Contents

Executive Summary i
1.0 Introduction 1
2.0 Background 1
2.1 Existing System 1
2.2 Operating Experience 3
3.0 Justification 3
4.0 Analysis 3
4.1 Identification of Alternatives 3
4.2 Evaluation of Alternatives 4
4.2.1 Deferral 4
4.2.2 Complete New Genset Installation 4
4.3 Recommended Alternative 5
5.0 Project Description 5
6.0 Conclusion 6

1.0 Introduction

Many communities in coastal Labrador are not connected to Hydro's Labrador Interconnected System for power supply and are instead provided with electricity from diesel generating stations owned and operated by Hydro. The community of Nain is located on the North coast of Labrador (Figure 1) where Hydro provides electrical service to approximately 500 customers. The Nain DGS contains four gensets; however, Unit 574 is currently derated from 865 kW to 550kW due to persistent overheating issues.

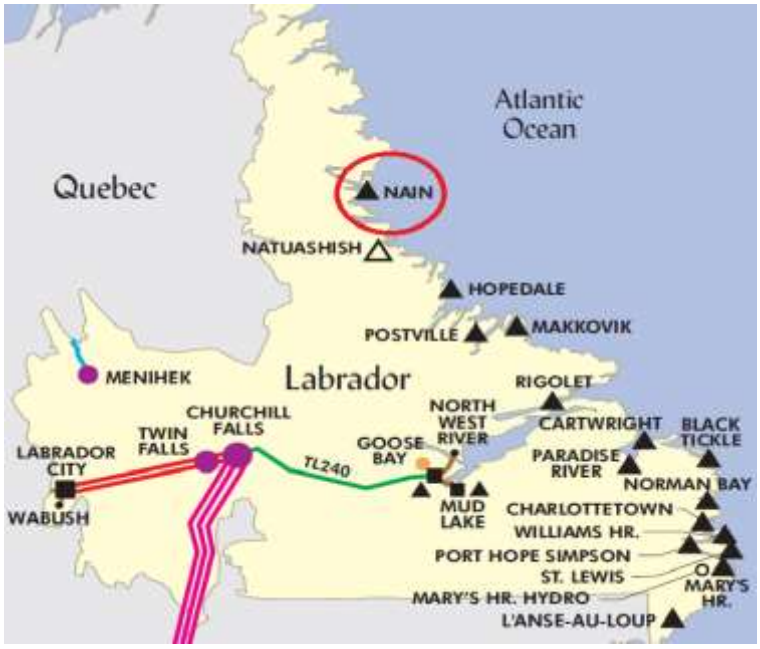

Figure 1: Nain – North Coast of Labrador

2.0 Background

2.1 Existing System

There are four gensets installed at the Nain DGS. The size and installation date of each unit is as follows:

Table 1: Gensets at the Nain Diesel Generating Station

Unit	Size (kW)	Installed
574	865[1]	2002
576	865	2002
2085	1,275	2009
591	860	2014

[1] Derated to 550 kW.



Figure 2: Nain Diesel Generating Station



Figure 3: Nain Diesel Generating Station Gensets

2.2 Operating Experience

Unit 574 is a 1,800 rpm diesel genset which was installed in 2002 and has been in service for 18 years. At the end of 2019, the unit had accumulated approximately 58,308 operating hours. The unit has averaged 1,959 hours per year over the past five years. Operating hours have been less than desired and unplanned maintenance has been frequently required. Since 2015, Unit 574 has experienced persistent engine overheating issues, which resulted in the unit being derated to 550 kW. Hydro has worked with the vendor (Wajax) but has not been able to resolve the problem despite replacing almost all engine components that would be replaced during a typical overhaul.

In addition to the recent attempts to resolve overheating issues in consultation with the vendor, Unit 574 was overhauled in 2006 and 2010. Many parts are no longer available and some parts have to be custom made, which increases the cost and time frame of repair. Hydro reviewed the option of replacing the engine; however, a replacement engine for this unit is not available. In addition, the generator is obsolete and parts are not available for repairs.

3.0 Justification

As per Hydro's Asset Management Program, 1,800 rpm diesel gensets similar to Unit 574 at Nain are overhauled every 20,000 hours and replaced when they reach 100,000 operating hours. This unit will be due for its next overhaul at 60,000 hours; however, Hydro proposes to forgo the overhaul and replace the genset as Hydro is not confident that another overhaul will fix the current overheating issue. This project is required to meet Hydro's firm capacity criteria and maintain reliable operation of the Nain DGS.

4.0 Analysis

4.1 Identification of Alternatives

Hydro has evaluated the following alternatives:

- Alternative 1: Defer installing new unit to a future year; and
- Alternative 2: Complete new genet installation.

4.2 Evaluation of Alternatives

4.2.1 Deferral

This alternative involves not replacing Unit 574 in 2021 and continuing to operate the derated unit; however, this results in a violation of Hydro's firm capacity requirements in isolated diesel generation systems.[2] The forecasted peak load in Nain for 2021 is 2,343 kW and with Unit 574 derated, the firm capacity of the Nain DGS is only 2,275 kW. Hydro is not confident that another overhaul of Unit 574 will restore rated output and deferral of its replacement is not recommended.

4.2.2 Complete New Genset Installation

This alternative consists of the replacement of Unit 574 with a new genset to increase reliability and achieve firm capacity for Nain in 2021. Nain also has an increasing load profile,[3] which is considered when evaluating replacement options. Unit 574 has a capacity of 865 kW but, due to engine overheating issues, the genset has been derated to 550 kW. To determine the most cost effective genset size to replace Unit 574, Hydro completed a cost-benefit analysis of alternative units with capacities of 910 kW (1,800 rpm) and 925 kW (1,200 rpm).[4] This analysis assumed a conservative annual operation of 3,000 hours per year. Results of the analysis indicate that the least cost alternative is to replace Unit 574 with a 1,200 rpm unit having a capacity of approximately 925 kW. The results of this analysis are summarized Table 2.

Table 2: Cost Benefit Analysis
Alternative Comparison Cumulative Net Present Value to the Year 2021

Alternatives	Cumulative Net Present Value (CPW)[5]	CPW Difference between Alternative and the Least-Cost Alternative
925 kW @ 1,200 rpm	$3,410,563	$0
910 kW @ 1,800 rpm	$3,502,747	$92,183

[2] Firm capacity is the summation of all units minus the largest unit and must be able to meet peak community load with the largest unit out of service.
[3] The peak load forecast for Nain is projected to increase from 2,343 kW in 2021 to 2,423 kW in 2024.
[4] Available rotational speeds for those gensets
[5] Cumulative net present value includes supply and install of 1,200 and 1,800 rpm engines, overhaul costs, replacement costs, and capital cost related to plant extensions.

Over a 25-year period the 1,200 rpm unit will demonstrate a savings of $92,183 compared to a 1,800 rpm unit, with higher annual operating hours resulting in greater savings. In Hydro's experience, a 1,200 rpm unit is more reliable than a 1,800 rpm unit and requires less maintenance and overhauls during its 120,000 hrs of life expectancy.

4.3 Recommended Alternative

Hydro recommends replacing Unit 574 with a new 925 kW 1,200 rpm diesel genset. A new genset will increase reliability and allow Hydro to meet firm capacity requirements for 2021 and beyond.

5.0 Project Description

This project will replace Unit 574 with a new 925 kW 1,200 rpm diesel genset.

The project scope also includes a new exhaust stack, radiator, fuel cooler, aftercooler, switchgear with breaker, motor control center ("MCC") for station service upgrade, and all other equipment necessary to ensure reliable operation. Upgrades to some existing protection and control equipment will be required including additions to the MCC programmable logic controller ("PLC") Cabinet, modifications to Main PLC, Human-Machine Interface configuration, and modification/testing of PLC logic. Modifications to the existing cooling system will also be necessary to accommodate the new diesel genset.

The estimate for this project is shown in Table 3.

Table 3: Project Estimate ($000)

Project Cost	2021	2022	Beyond	Total
Material Supply	973.5	0.0	0.0	**973.5**
Labour	680.6	341.3	0.0	**1,021.9**
Consultant	275.0	0.0	0.0	**275.0**
Contract Work	0.0	0.0	0.0	**0.0**
Other Direct Costs	301.7	0.0	0.0	**301.7**
Interest and Escalation	120.6	154.1	0.0	**274.7**
Contingency	209.2	29.6	0.0	**238.8**
Total	**2,560.6**	**525.0**	**0.0**	**3,085.6**

The anticipated project schedule is shown in Table 4.

Table 4: Project Schedule

Activity	Start Date	End Date
Planning:		
Open project, prepare scope statement; prepare detailed schedule	January 2021	February 2021
Design:		
Prepare design for mechanical, electrical, P&C[6] components for new genset installation	February 2021	March 2021
Procurement:		
New genset, electrical, mechanical, P&C equipment	April 2021	June 2021
Construction:		
Install new genset, electrical, mechanical, P&C equipment.	July 2021	September 2021
Commissioning:		
Perform commissioning of new genset	September 2021	October 2021
Closeout:		
Drawings update to the database, asset assignment and prepare closeout documents	March 2022	June 2022

6.0 Conclusion

Unit 574 at the Nain DGS has a long standing overheating problem that has caused repeated corrective maintenance interventions, derating of the unit, and expensive repairs. Multiple attempts have been made to resolve the problem with the manufacturer but with little success. The derating of Unit 574 results in a violation of the firm capacity requirement for the generating station and the community's peak load is forecast to increase over the next 5 years.

Hydro is proposing to replace Unit 574 with a new unit to maintain reliable operation of the Nain DGS. The analysis of available replacement alternatives indicates that a 925 kW 1,200 rpm genset is the least-cost alternative.

[6] Protections & Controls.

13. Wabush Terminal Station Upgrades



2021 Capital Budget Application

Wabush Terminal Station Upgrades

July 2020

A report to the Board of Commissioners of Public Utilities

newfoundland labrador hydro
a nalcor energy company

Executive Summary

This proposal is for a three-year project to complete upgrades to the Wabush Terminal Station that are required to support Newfoundland and Labrador Hydro's ("Hydro") ability to provide reliable service to Labrador West industrial customers and meet the baseline load forecast.

The transfer capability of the existing Labrador West transmission system in winter is insufficient to meet current and forecast customer load requirements. The transfer capability of the existing Labrador West transmission system in winter is 350 MW under normal operating conditions with all of Hydro's assets in service. The P90 baseline load forecast for winter 2020–2021 is 379.9 MW and is expected to reach 383.3 MW by the winter of 2045–2046. Under existing system conditions, power supplied to the Iron Ore Company of Canada ("IOC") and Wabush Mines must be limited such that the total coincident peak for the system does not exceed 350 MW. In the absence of upgrades to increase the transfer capability of the system beyond 350 MW, industrial customer loads may be interrupted. There is no capacity available for development.

System upgrades included as part of this capital project include the replacement of two transformers, T4 and T5, and the addition of a 23 MVAR capacitor bank and associated equipment. Attachment 3 provides detailed analysis of the Labrador West system expansion requirements and recommended upgrades.

The proposed system upgrades are estimated to cost $11.6 million and are scheduled to be completed by the end of 2023.

Contents

Executive Summary i
1.0 Introduction 1
2.0 Background 1
2.1 Existing System 1
2.2 Operating Experience 1
3.0 Justification and Analysis 2
4.0 Project Description 3
5.0 Conclusion 5

List of Attachments

Attachment 1: Single-Line Diagram of Existing Wabush Terminal Station

Attachment 2: Single-Line Diagram of Recommended Upgrades

Attachment 3: Labrador West System Expansion Study
Wabush Terminal Station Recommended Upgrades

1.0 Introduction

As per the Labrador West System Expansion Study (provided in Attachment 3), transformer and reactive power additions are required at Wabush Terminal Station to meet existing and forecast loads. This project involves the replacement of critical assets, transformers T4 and T5, as well the addition of a new capacitor bank. These upgrades will help support Hydro's ability to meet firm supply requirements for customers in accordance with the criteria established for the transmission system in western Labrador.

2.0 Background

2.1 Existing System

There are two, 230 kV transmission lines connecting the Wabush Terminal Station to Churchill Falls. At Wabush Terminal Station the voltage is stepped down from 230 kV to two, 46 kV buses separated by a normally open 46 kV bus tie circuit breaker. There are a total of eight power transformers as well as two -40/+60 MVar synchronous condensers designated as SC1 and SC2. A third synchronous condenser, SC3, which is rated for -20/+60 MVar, and a 30 MVar shunt reactor are also located at Wabush Terminal Station but are owned by the IOC. There are also two 25.2 MVar, 46 kV capacitor banks, C1 and C2, with one connected to each 46 kV bus. Attachments 1 and 2 contain single-line diagrams for the existing Wabush Terminal Station and the proposed upgrades to the Wabush Terminal Station, respectively. The expansion study provided in Attachment 3 provides further detail relating to the transmission system in western Labrador.

2.2 Operating Experience

The two transformers proposed for replacement are T4 and T5. Transformer T4 is 59 years old and, based on its condition, is planned to be replaced in 2023. Transformer T5 is 48 years old and is not due for replacement in the near-term as it is in good condition and may remain on site as a spare.

Hydro's terminal stations assets are maintained as described in the "Terminal Station Asset Management Overview."[1]

[1] Refer to Vol. II, Tab 9 of Newfoundland and Labrador Hydro's 2021 Capital Budget Application.

3.0 Justification and Analysis

This project is required to maintain reliable service to industrial customers in western Labrador and to meet forecast load growth. The customer load in western Labrador is forecast to reach 379.9 MW by winter 2020–2021 and 383.3 MW by the end of the 25-year study period. The transfer capability of the existing Labrador West transmission system in winter is 350 MW under normal operating conditions with all of Hydro's assets in service. Under existing system conditions, power supplied to IOC and Wabush Mines must be limited such that the total coincident peak for the system does not exceed 350 MW. As such, Hydro does not recommend deferring this project another year.

To increase the transmission capability of the system beyond 350 MW, new transmission infrastructure is required. In the absence of such upgrades, Hydro must establish specific operating limits[2] and procedures for curtailing industrial customers.

If upgrades to the Wabush Terminal Station are not implemented and SC3 is not available for long-term operation,[3] supply to industrial customers must be curtailed when the Labrador West transmission system peak load exceeds 350 MW under normal operations. Additionally, there is no capacity available to supply potential future developments.

Further, if a transformer at the Wabush Terminal Station was to fail, there is insufficient power transformer capacity to meet the forecast peak load. In this case, there would be a number of potential customer impacts. As the Wabush Terminal Station does not have spare transformers or access to mobile transformer units, it would take a minimum of two years to source and install a new transformer due to the long unit lead times and the short construction season in western Labrador. The logistics of installing temporary diesel generation in the winter months would be particularly problematic and preliminary estimates indicate it would cost more than the installation of a replacement transformer.

On this basis, to ensure that Hydro can supply firm capacity over peak and avoid industrial customer curtailment, it is recommended that the upgrades at the Wabush Terminal Station not be deferred.

[2] Operating limits would be added to the Wabush Terminal Station operating procedure.
[3] SC3 is owned by IOC. To ensure firm supply for all customers, the system additions will be supplemented by capacity made available by either SC3 or the purchase of an additional 60 MVar capacitor bank and 27 MVAR reactor. A final decision and cost determination on this item will be made in the fall of 2020.

Additional detail related to the proposed project and how it will ensure reliable supply for customers in western Labrador in consideration of a 25-year load forecast is provided in Attachment 3.

4.0 Project Description

This project includes the replacement of two transformers, T4 and T5, with new 125 MVA units, and the addition of one capacitor bank and associated equipment. The scope of work includes the following:

- Removal of existing 230/46 kV transformer T4 and T5;
- Purchase and installation of two, 230/46 kV, 75/100/125 MVA transformers, complete with on-load tap changers and protection upgrades only for T5;
- Purchase and installation of one, 23 MVar capacitor bank stage complete with grounding switches, inrush reactor, 72.5 kV, 2000 A, 40 kA circuit breaker including current transformers ("CT") and one 72.5 kV disconnect switch on Bus B1;
- Purchase and installation of new 4/0 ground grid, equipment grounds and fence grounding;
- Purchase and installation of new conductors and cables required to interconnect equipment;
- Modifications to existing protection and control panels to accommodate the new transformers and capacitor bank;
- Modifications to existing Supervisory Control and Data Acquisition ("SCADA") system to add new capacitor bank;
- Purchase and Installation of electrical connectors, 2" aluminum bus, insulators and conductors for new circuit breaker bay;
- All necessary civil work required to accommodate the new equipment and upgrades; and
- Engineering design study for capacitor bank addition.

The estimate for this project is shown in Table 1.

Table 1: Project Estimate ($000)

Project Cost	2021	2022	Beyond	Total
Material Supply	6.6	771.6	158.1	**936.3**
Labour	357.1	540.1	322.8	**1,220.0**
Consultant	0.0	23.1	0.0	**23.1**
Contract Work	1,560.8	2,626.2	2,863.9	**7,050.9**
Other Direct Costs	23.7	44.8	54.0	**122.5**
Interest and Escalation	116.0	434.0	605.1	**1,155.1**
Contingency	237.5	495.7	331.8	**1,065.0**
Total	**2,301.7**	**4,935.5**	**4,335.7**	**11,572.9**

1 The anticipated project schedule is shown in Table 2.

Table 2: Project Schedule

Activity	Start Date	End Date
Planning:		
Project setup activities	January 2021	March 2021
Design:		
Engineering design study for capacitor bank addition	March 2021	June 2021
Civil Engineering design for yard extension	January 2021	May 2021
Engineering design for T4 replacement	January 2022	April 2022
Engineering design for T5 replacement and protection upgrades	January 2023	April 2023
Procurement:		
Procurement of capacitor bank	July 2021	March 2022
Procurement of two, 125 MVA transformers	April 2021	June 2022
Construction:		
Civil construction contract	June 2021	October 2021
Transformer T4 replacement	July 2022	August 2022
Capacitor bank construction	July 2022	October 2022
Transformer T5 replacement	July 2023	August 2023
Commissioning:		
T4 commissioning	July 2022	August 2022
Capacitor bank commissioning	September 2022	October 2022
T5 commissioning	July 2023	August 2023
Closeout:		
Project closeout activities	Oct 2023	Dec 2023

5.0 Conclusion

As per the expansion study provided in Attachment 3, transformer and reactive power additions are required at the Wabush Terminal Station to meet existing and forecast loads. System additions included as part of this capital project include the replacement of two transformers, T4 and T5, as well as the addition of a 23 MVAR capacitor bank and associated equipment. The proposed system additions are estimated to cost $11.6 million and would be completed by the end of 2023.

Attachment 1

Single-Line Diagram of Existing Wabush Terminal Station

newfoundland labrador hydro
a nalcor energy company

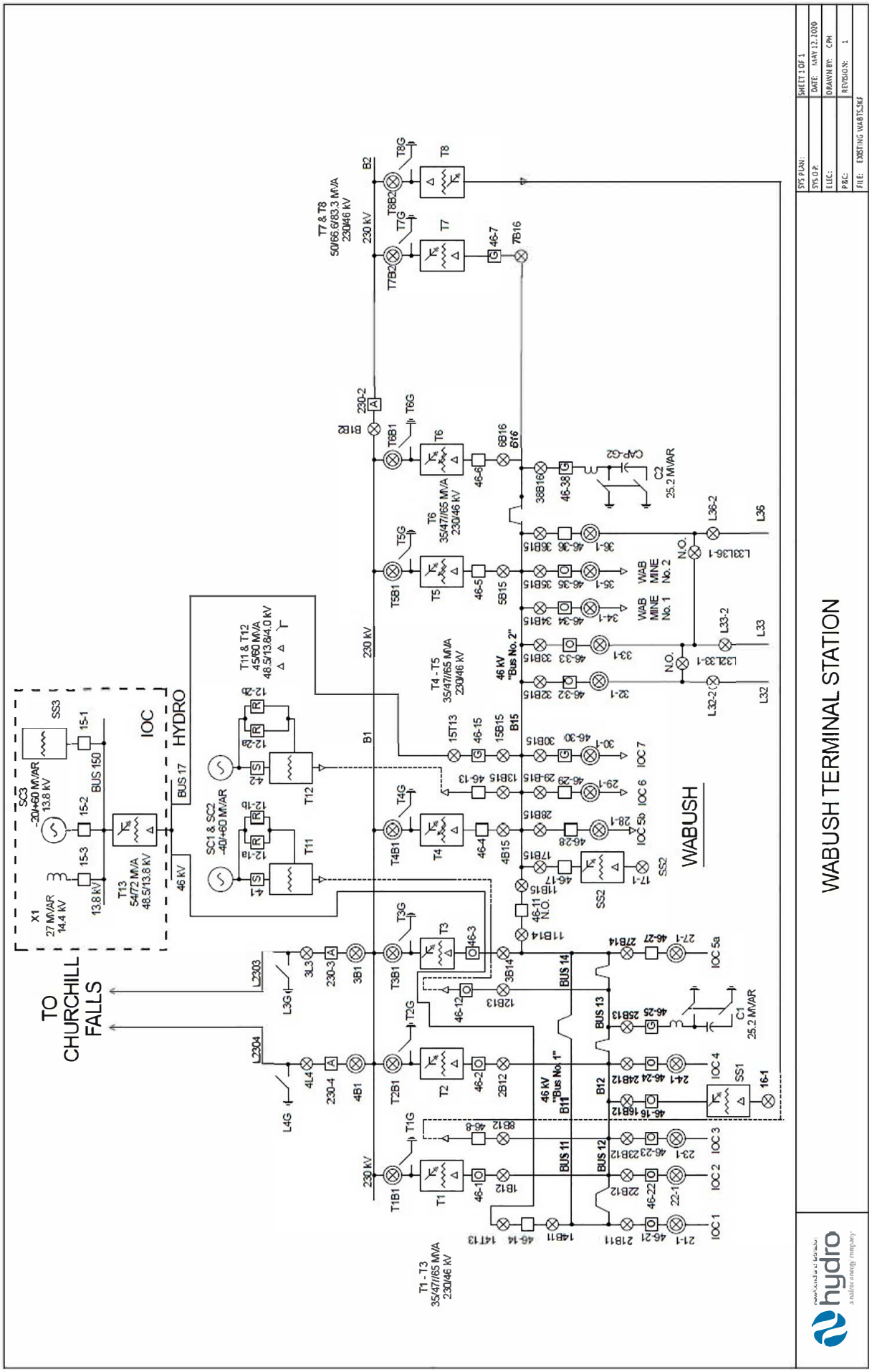
WABUSH TERMINAL STATION
TO CHURCHILL FALLS
HYDRO
IOC
WABUSH
T1 - T3 35/47/65 MVA 230/46 kV
T4 - T5 35/47/65 MVA 230/46 kV
T6 35/47/65 MVA 230/46 kV
T7 & T8 50/66.6/83.3 MVA 230/46 kV
T11 & T12 45/60 MVA 48.5/13.8/4.0 kV
T13 54/72 MVA 48.5/13.8 kV
X1 27 MVAR 14.4 kV
SC1 & SC2 -40/+60 MVAR
SC3 -20/+60 MVAR 13.8 kV
46 kV "Bus No. 1"
46 kV "Bus No. 2"
WAB MINE No. 1
WAB MINE No. 2
C1 25.2 MVAR
C2 25.2 MVAR
SHEET 1 OF 1
DATE: MAY 12, 2020
DRAWN BY: CPH
REVISION: 1
FILE: EXISTING WABTS.SKF

Attachment 2

Single-Line Diagram of Recommended Upgrades

newfoundland labrador hydro
a nalcor energy company

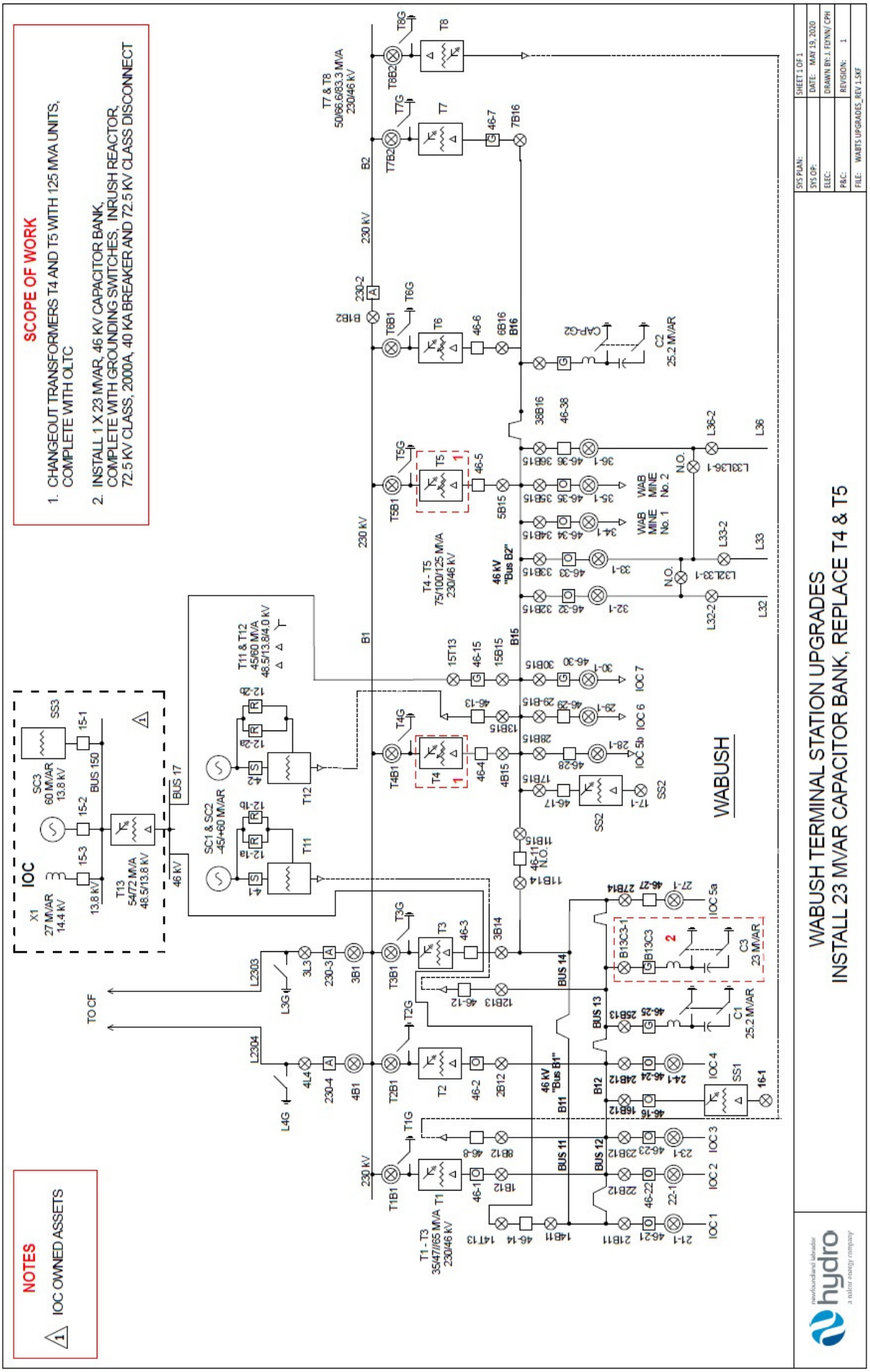
SCOPE OF WORK
1. CHANGEOUT TRANSFORMERS T4 AND T5 WITH 125 MVA UNITS, COMPLETE WITH OLTC
2. INSTALL 1 X 23 MVAR, 46 KV CAPACITOR BANK, COMPLETE WITH GROUNDING SWITCHES, INRUSH REACTOR, 72.5 KV CLASS, 2000A, 40 KA BREAKER AND 72.5 KV CLASS DISCONNECT
NOTES
1 IOC OWNED ASSETS
IOC
WABUSH
WABUSH TERMINAL STATION UPGRADES
INSTALL 23 MVAR CAPACITOR BANK, REPLACE T4 & T5
T7 & T8 50/66.6/83.3 MVA 230/46 kV
T4 - T5 75/100/125 MVA 230/46 kV
T1 - T3 35/47//65 MVA 230/46 kV
T11 & T12 45/60 MVA 48.5/13.8/4.0 kV
SC1 & SC2 -45/+60 MVAR
SC3 60 MVAR 13.8 kV
T13 5/4/72 MVA 48.5/13.8 kV
X1 27 MVAR 14.4 kV
C1 25.2 MVAR
C2 25.2 MVAR
C3 23 MVAR
46 kV "Bus B1"
46 kV "Bus B2"
230 kV
WAB MINE No. 1
WAB MINE No. 2
TO CF
SYS PLAN:
SYS OP:
ELEC:
P&C:
FILE: WABTS UPGRADES_REV 1.SKF
SHEET 1 OF 1
DATE: MAY 19, 2020
DRAWN BY: J. FENN/ CPH
REVISION: 1
newfoundland labrador hydro
a nalcor energy company

Attachment 3

Labrador West System Expansion Study

Wabush Terminal Station Recommended Upgrades

newfoundland labrador hydro
a nalcor energy company



Labrador West System Expansion Study
Wabush Terminal Station Recommended Upgrades

July 2020

A report to the Board of Commissioners of Public Utilities

newfoundland labrador hydro
a nalcor energy company

Contents

1.0 Introduction 1
2.0 Overview 1
2.1 Existing System 1
2.1.1 Labrador West 230 kV Transmission System 2
2.1.2 Wabush Terminal Station 2
2.1.3 Labrador West 46 kV Transmission System 3
2.1.4 Existing Customers 3
2.2 Load Forecast 3
3.0 Reliability and Load Growth at the Wabush Terminal Station 4
3.1 Consideration of Transmission Planning Criteria 4
3.2 Impact of Contingencies on Power Transfer Capability 5
3.2.1 Loss of a Synchronous Condenser 6
3.2.2 Loss of a Capacitor Bank or Power Transformer 6
3.2.3 Resulting Deficiencies 8
3.2.4 Customer Impacts 8
3.3 Transformer Capacity Concerns 9
3.3.1 Customer impacts of a transformer failure at Wabush Terminal Station 10
3.4 Station Operational Concerns 10
3.5 Summary of System Additions Required to Address Concerns 11
4.0 Summary of Labrador Interconnected System Transmission Expansion Study and Status of SC3 11
4.1 Original Expansion Plan Proposed Solution 11
4.2 Current Status of Synchronous Condenser 3 12
4.3 Proposed Capital Project 12
5.0 Description of Recommended System Additions 13
6.0 Conclusion 14

List of Appendices

Appendix A: Single-Line Diagram of Existing Wabush Terminal Station

Appendix B: Transformer Capacity Load Flow Analysis

Appendix C: Additional Reactive Support Load Flow Analysis

Appendix D: Stantec Consulting Ltd. – Labrador West Voltage Support Cost Estimate Summary

Appendix E: Single-Line Diagram of Recommended Upgrades

1.0 Introduction

This report includes a summary of the expansion plans for the transmission system in western Labrador. The objective of the analysis is to define upgrade requirements to meet the baseline load forecast and provide the necessary station reliability improvements. The analysis is based on a forecasted load growth period of 25 years, from 2020–2021 to 2045–2046.

2.0 Overview

2.1 Existing System

Figure 1 provides a block diagram showing the configuration of the Labrador West transmission system operated by Newfoundland and Labrador Hydro ("Hydro"). The components of the system are described in the following subsections.

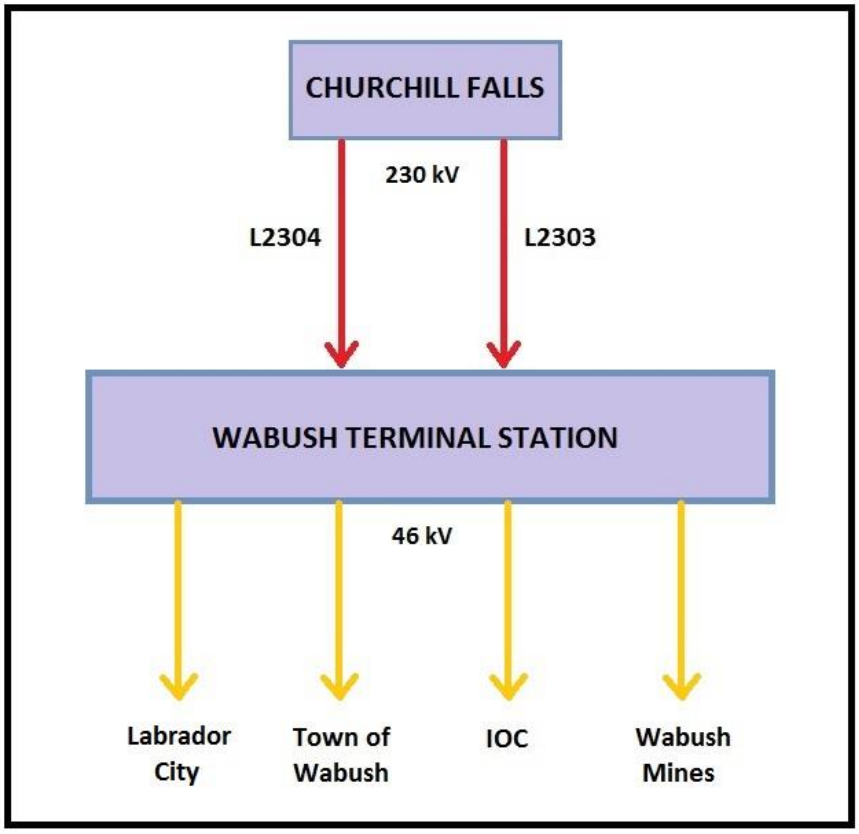

Figure 1: Existing Labrador West Transmission System

2.1.1 Labrador West 230 kV Transmission System

The Labrador West 230 kV transmission system consists of two 230 kV transmission lines from Churchill Falls to Wabush, L2303 ("L23") and L2304 ("L24"), which cover a distance of 216 km. Each transmission line consists of steel structures with a single 636 kcmil 26/7 ACSR "GROSBEAK" conductor per phase. Each transmission line has the following thermal limits, based upon a 50˚C conductor temperature:

- 425 A @ 30˚C;
- 638 A @ 15°C; and
- 921 A @ -15˚C.

2.1.2 Wabush Terminal Station

A single-line diagram of the Wabush Terminal Station is provided in Appendix A. The Wabush Terminal Station is configured in a load bus arrangement with two main 46 kV buses, Bus No. 1 ("B1") and Bus No. 2 ("B2"), and a normally open 46 kV bus tie circuit breaker. It is noted that B1 consists of 46 kV buses B11, B12, B13, and B14 and B2 consists of 46 kV buses B15 and B16. The Wabush Terminal Station has a total of eight step-down power transformers that reduce the transmission line voltage from 230 kV to 46 kV, as listed in Table 1.

Table 1: Wabush Terminal Station Power Transformers

Transformer	Bus	Voltage Rating (kV)	Power Rating (MVA) (25°C Ambient)[1]
T1	B1	230/132.8-46	35/47/58/65
T2	B1	230/132.8-46	35/47/58/65
T3	B1	230/132.8-46	35/47/58/65
T4	B2	230/132.8-46	35/47/58/65
T5	B2	230/132.8-46	35/47/58/65
T6	B2	230/46	35/47/58/65
T7	B2	230/132.8-46	50.0/66.7/83.3
T8	B1	230/46	50.0/66.7/83.3

[1] Calculated in accordance with "NLSO Standard Transmission Facilities Rating Guide," Doc #. TP-S-001, Newfoundland and Labrador Hydro, November 1, 2017, sec. 6.1. <https://www.oatioasis.com/NLSO/NLSOdocs/Transmission_Facilities_Rating_Guide.pdf>

The Wabush Terminal Station also includes:

- Two, -40/+60 MVar Synchronous Condensers, No. 1 ("SC1") and No. 2 ("SC2");
- One, -20/+60 MVar Synchronous Condenser, No. 3 ("SC3") and one 27 MVar reactor at 14.4 kV. Both of these assets are owned by Iron Ore Company and Canada ("IOC") and are only currently available for capacity for IOC;[2]
- Two, 25.2 MVar, 46 kV Capacitor Banks No. 1 ("C1") and No. 2 ("C2"); and
- Two, 46 kV grounding/station service transformers (one per 46 kV bus) with a third ground point from the 83.3 MVA power transformer T8.

2.1.3 Labrador West 46 kV Transmission System

The Labrador West 46 kV transmission system supplies the towns of Wabush and Labrador City, as well as two Industrial Customers the IOC and Wabush Mines (operated by Tacora Ltd.). It includes 46 kV transmission lines L32, L40, and L33 which connect customers in Labrador City, and the 46 kV transmission line L36 which connects customers in the Town of Wabush.

2.1.4 Existing Customers

Under normal operations, the existing Labrador West system supplies IOC, Wabush Mines, and Hydro Rural customers in the towns of Labrador City and Wabush.

2.2 Load Forecast

A 25-year load forecast for western Labrador is provided in Table 2. These values are based on the Long-Term Labrador Interconnected Load Forecast Summary, dated June 12, 2019. The forecast was extended to the winter of 2045–2046 by adding the 5-year (2037–2041) average incremental increase of 0.1 MW to years 2042–2046.

[2] SC3 was fully commissioned by IOC in 2019 and is now in operation, providing additional capacity to IOC.

Table 2: Long-Term Labrador Interconnected Load Forecast
Total Labrador West Requirements

Year	Peak (MW)[3] P50	Peak (MW)[3] P90
2020–2021	378.1	379.9
2021–2022	378.4	380.2
2022–2023	378.5	380.3
2023–2024	378.6	380.4
2024–2025	379.0	380.8
2025–2026	379.2	381.0
2026–2027	379.4	381.2
2027–2028	379.5	381.3
2028–2029	379.7	381.5
2029–2030	379.9	381.7
2030–2031	380.0	381.8
2031–2032	380.1	381.9
2032–2033	380.2	382.0
2033–2034	380.3	382.1
2034–2035	380.4	382.2
2035–2036	380.5	382.3
2036–2037	380.6	382.4
2037–2038	380.7	382.5
2038–2039	380.8	382.6
2039–2040	380.9	382.7
2040–2041	381.0	382.8
2041–2042	381.1	382.9
2042–2043	381.2	383.0
2043–2044	381.3	383.1
2044–2045	381.4	383.2
2045–2046	381.5	383.3

3.0 Reliability and Load Growth at the Wabush Terminal Station

The following sections include descriptions of the reliability and load growth at the Wabush Terminal Station.

3.1 Consideration of Transmission Planning Criteria

Hydro's prescribed Transmission Planning Criteria[4] are applied within the Newfoundland and Labrador Interconnected System. However, these criteria are only strictly applied to the portion of the

[3] Peak equates to peak requirements at terminal station delivery points to meet region peak.
[4] "NLSO Standard Transmission Planning Criteria," Doc # TP-S-007, Newfoundland and Labrador Hydro, April 13, 2020. <https://www.oasis.oati.com/woa/docs/NLSO/NLSOdocs/TP-S-007_Transmission_Planning_Criteria_UPDATED_04132020.pdf>

Newfoundland and Labrador Interconnected System that is defined as the primary transmission system. The primary transmission system includes the portions of the Newfoundland and Labrador Interconnected System that permit the bulk flow of electricity across the transmission system. This consists of the 230 kV transmission system on the island of Newfoundland, the Labrador-Island Link, and the 735 kV and 315 kV transmission systems in Labrador.

Hydro's approach to transmission planning for the Labrador Interconnected System involves balancing reliability and cost for the customers within this system. For example, Hydro does not rigidly apply its Transmission Planning Criteria for the systems in western Labrador as it is classified as a local network.

The following criteria were defined for the transmission system in western Labrador as part of the Labrador Interconnected System Expansion Study.[5]

- No loss of load for:
  - Loss of a synchronous condenser;
  - Loss of a capacitor bank; and
  - Loss of a power transformer.
- Loss of load is permitted for:
  - Loss of a 230 kV transmission line.

With respect to transformer contingencies, the following Transmission Planning Criteria also applies to the transmission system in western Labrador:

> Transformer additions at all major (≥230 kV) terminal stations (i.e. two or more transformers per voltage class) shall be planned on the basis of being able to withstand the loss of the largest unit (i.e. installed spare transformer capacity) such that all firm[6] loads can be supplied during system peak.

The reliability implications of these criteria are presented in this report.

3.2 Impact of Contingencies on Power Transfer Capability

The impact of the applicable contingencies to the existing transfer capability of the Labrador West transmission system is described in the following sections.

[5] "Labrador Interconnected System Transmission Expansion Study," Newfoundland and Labrador Hydro, April 3, 2019, rev. 2 (originally filed October 31, 2018).
[6] The firm transformation capacity is the total station capacity less the transformer with the largest rating.

3.2.1 Loss of a Synchronous Condenser

The transfer capability of the existing Labrador West transmission system[7] is summarized in Table 3:

Table 3: Maximum Power Delivered to Wabush Terminal Station with all Equipment in Service (MW)

Season	3 Synchronous Condensers	2 Synchronous Condensers	1 Synchronous Condensers	0 Synchronous Condensers
Winter	385	350	285	245
Summer	310	310	285	245

The transfer capability of the Hydro-owned assets in winter is 350 MW under normal operating conditions with all equipment in service. This is due to voltage limitations at the Wabush Terminal Station. With SC3 in service, the transfer capability is increased to 385 MW in winter. The additional 35 MW of non-firm capacity is available for IOC's exclusive use and is currently not available as a source of capacity for other customers. Excluding SC3, the loss of a synchronous condenser reduces capacity to 285 MW.

Reliability analysis was performed to quantify the customer impact of the unavailability of a synchronous condenser. From the Canadian Electricity Association's 2018 annual equipment reliability report,[8] the unavailability for synchronous condensers up to 109 kV for forced outages due to integral subcomponents is 1.098%. The Expected Unserved Energy ("EUE") was determined for both the 2020–2021 and 2045–2046 cases, and is presented in Table 4.

Table 4: EUE for the Unavailability of a Synchronous Condenser (GWh)

Year	EUE
2020–2021	2.5
2045–2046	2.7

This is equivalent to experiencing the 65 MW impact of a synchronous condenser outage for almost 42 hours per year.

3.2.2 Loss of a Capacitor Bank or Power Transformer

The peak load transfer capability of the existing Labrador West transmission system with both capacitor and transformer contingencies is summarized in Table 5.

[7] In accordance with "Labrador West Transmission Capability" Doc #. TP-TN-058, Newfoundland and Labrador Hydro, September 6, 2019.
[8] Forced Outage Performance of Transmission Equipment.

Table 5: Maximum Power Delivered to Wabush Terminal Station with Loss of Capacitor or Transformer (MW)

Contingency	3 Synchronous Condensers in Service	2 Synchronous Condensers in Service
C1	298	298
C2	377	330
T7	361	344
T8	379	348

The limitation for all contingencies presented in Table 5 is the maximum terminal voltage on SC1, SC2, and SC3 at 1.05 per unit. For the capacitor contingency of loss of C2, IOC feeder 5 load must be transferred from B2 to B1 to reduce the terminal voltage of SC2. For the transformer contingency of loss of T7, IOC feeder 5 load must be transferred from B2 to B1 to avoid transformer overloads.

Therefore, with the existing system, when SC1 and SC2 are in service, the loss of a capacitor bank reduces the capacity to 298 MW, and the loss of a power transformer reduces the capacity to 344 MW.

Reliability analysis was performed to quantify customer impact as a result of the unavailability of a capacitor bank or a transformer. From the Canadian Electricity Association's 2018 annual equipment reliability report[9] for Hydro, the unavailability for shunt capacitors up to 109 kV for forced outages due to integral subcomponents is 0.015% and the unavailability for transformer banks between 200–299 kV is 5.415%. The EUE was determined for both the 2020–2021 and 2045–2046 cases and is presented in Table 6.

Table 6: EUE for the Unavailability of Capacitors and Transformers (GWh)

Year	EUE Capacitor	EUE Transformer
2020–2021	21.1	378.8
2045–2046	23.5	558.8

The capacitor bank impact is equivalent to experiencing the 51 MW capacity reduction for a half hour per year. The power transformer impact can be measured in the context of a reduction of system capacity from the target value of 383.3 MW to 344 MW for the loss of a 83.3 MVA transformer and to 354.5 MW for the loss of a 65 MVA transformer. The transformer impact is equivalent to experiencing the combined capacity reduction for a total of 17 hours per year.

[9] Forced Outage Performance of Transmission Equipment.

3.2.3 Resulting Deficiencies

The P90 baseline load forecast is expected to reach 383.3 MW by the winter of 2045-2046. This includes all customers at peak forecasted values as follows:

- IOC at 262 MW;
- Wabush Mines at 55 MW; and
- Hydro Rural customers (includes normal uptick of retail growth).

If SC3 is not available to provide firm capacity, power supplied for IOC and Wabush Mines must be limited such that the total coincident peak for the system does not exceed 350 MW. To increase the firm transmission capability of the system beyond 350 MW, new transmission infrastructure is required. In the absence of such upgrades, Hydro must employ operating instructions where Industrial Customer loads are curtailed.

Peak load exceeded 350 MW in winter 2019–2020, as SC3 was in operation under a short-term operational agreement where IOC utilized this additional capacity to make up the shortfall. However, a long-term operational agreement does not exist. On that basis, capacity from SC3 cannot be assumed to be available as a source of capacity to meet customer requirements for the duration of the study period.

3.2.4 Customer Impacts

The transfer capability of the existing Labrador West transmission system is 350 MW under normal operating conditions with all of Hydro's equipment in service. Under existing system conditions, power supplied to IOC and Wabush Mines must be limited such that the total coincident peak for the system does not exceed 350 MW.

If upgrades to the Wabush Terminal Station are not implemented and SC3 is not available for long-term operation, supply to Industrial Customers must be curtailed when the Labrador West transmission system peak load exceeds 350 MW under normal operations. In addition to this, there is no capacity available for development.

A projected load review[10] of the curtailment and interruptible requirements in Labrador West concluded that with the existing system capacity of 350 MW, industrial customers could be interrupted between 30

[10] In accordance with "Labrador West Industrial Customer Curtailment/Interruptible Assessment" Doc #. TP-TN-054, Newfoundland and Labrador Hydro, February 8, 2019.

to 50 times a year during the winter months. Interruptions were predicted to range from 4 hours up to 122 hours in the winter months.

3.3 Transformer Capacity Concerns

As per the load forecast provided in Section 2.2, peak demand for the Wabush Terminal Station is expected to reach 378.1 MW (P50)/379.9 MW (P90) in winter 2020–2021 and 381.5 MW (P50)/383.3 MW (P90) by the winter of 2045-2046. The corresponding capacities in MVA[11] are presented in Table 7.

Table 7: Forecasted Peak Demand at Wabush Terminal Station

	Forecasted Peak Demand			
	P50 Forecast		P90 Forecast	
2020–2021	378.1 MW	395.5 MVA	379.9 MW	397.3 MVA
2045–2046	381.5 MW	399.0 MVA	383.3 MW	400.8 MVA

Due to the split bus configuration of the Wabush Terminal Station, the transformer capacity is evaluated on a per-bus basis. The non-firm transformer capacity for each 46 kV bus is 278.3 MVA, while the firm transformer capacity for each bus is 195 MVA.

Bus B2 typically carries 57% of the station's total load, as it supplies IOC, Wabush Mines, and the Town loads, whereas B1 only supplies IOC load. Therefore, for the Peak P90 Forecast case for 2045–2046, the total load supplied on B2 would be 228 MVA which exceeds the firm transformer capacity for B2.

Therefore, there is a violation to Transmission Planning Criteria as there is insufficient power transformer capacity to meet peak forecasted load for n-1 contingency situations. As is the case for all other Hydro terminal stations, such a violation would trigger the requirement for the installation of additional power transformer capacity. This requirement is further justified in the following sections.

[11] The power factors during peak conditions are assumed to be 0.95 for IOC, 0.965 for Wabush Mines and 0.975 for Hydro Rural customers.

3.3.1 Customer impacts of a transformer failure at Wabush Terminal Station

If a transformer at the Wabush Terminal Station were to fail under peak load conditions, the potential customer impacts are summarized as follows:

- There are currently no additional spare transformers or mobile transformer units that could be installed to meet the firm peak loading capacity;
- It would take a minimum of two years to source and install a new transformer, due to the long unit lead times and the short construction season in western Labrador, where switchyard work is limited to the period from June to September;
- Preliminary estimates of equipment costs associated with the lease and operation of mobile generation over a two-year period would be in excess of $10 million (excluding fuel costs). These costs would therefore exceed the cost of a replacement power transformer. The logistics of an emergency installation in winter months would be particularly problematic; and
- During the two-year transformer outage, there would be an exposure to an n-1-1 situation where capacity could potentially be further reduced by a second transformer failure. In such a case, a maximum load of 319 MW could be served.

The two proposed transformers for replacement are T4 and T5. Transformer T4 is 59 years old and has a planned replacement year of 2023 due to condition. Transformer T5 is 48 years old and is not due for replacement in the near-term as it is in good condition. This transformer may remain on site as a spare.

On the basis of the above, it is recommended that transformation capacity be increased at Wabush Terminal Station as part of this expansion project. Appendix B provides the recommended ratings of the proposed transformers that would support Hydro's ability to reliably supply firm loads during system peak.

3.4 Station Operational Concerns

Restoration of the transmission system in western Labrador presents a significant operational challenge due to voltage considerations. The 230 kV bus voltage at Churchill Falls is under the operational control of Churchill Falls (Labrador) Corporation and held in the range between 238 kV (1.035 per unit) and 244 kV (1.061 per unit). A key concern in a restoration scenario is the voltage rise at the Wabush Terminal Station due to the charging effect of the 230 kV transmission lines. To support restoration, IOC owns a 27 MVAR shunt reactor that is used to prevent overvoltage conditions. With this reactor in service,

voltages at the Wabush Terminal Station are held within specified limits and are held below 1.10 per unit. Without the reactor, there would be a risk of power transformer over excitation as the 1.10 per unit limit would be violated. The reactor is therefore required to ensure reliable operation of the transmission system in western Labrador.

3.5 Summary of System Additions Required to Address Concerns

As previously noted, the non-firm capacity of the system is limited to 350 MW when considering only Hydro assets. The following system reinforcements would be required to ensure firm supply for peak loads:

- Two new 125 MVA transformers on 46 kV bus B2 for firm supply over peak (Appendix B provides load flow plots depicting this solution). These new units would increase the firm transformer capacity on B2 from 195 MVA to 273.3 MVA ;
- 83 MVar of reactive support for voltage support over peak. The additional reactive support would increase the firm capacity of the system from 350 MW to 387 MW (Appendix C provides load flow plots depicting this solution); and
- A shunt reactor with minimum size of 27 MVar for system restoration.

4.0 Summary of Labrador Interconnected System Transmission Expansion Study and Status of SC3

The limited available transfer capacity of the Labrador Interconnected System was assessed as part of the Labrador Interconnected System Expansion Study.[12] This study included a review of potential expansion plans to deliver the lowest cost consistent with reliable service solution to customers in Labrador.

4.1 Original Expansion Plan Proposed Solution

The recommended solution was designed to ensure firm delivery of the full baseline load forecast for all contingencies with the exception of loss of either L23 or L24.

[12] Labrador Interconnected System Transmission Expansion Study," Newfoundland and Labrador Hydro, April 3, 2019, rev. 2 (originally filed October 31, 2018).

The original recommended upgrades to the Wabush Terminal Station[13] to meet the baseline load forecast without load restriction involved the addition of a 23 MVar capacitor bank for voltage support and replacement of power transformers T4 and T5 with 125 MVA units. This solution assumed that IOC's SC3 with its 60 MVar reactive power capability and 27 MVar reactor would be available for long-term operation. Such a solution would provide an addition of 83 MVar of reactive voltage support, via SC3 and the additional 23 MVar of capacitor banks.

4.2 Current Status of Synchronous Condenser 3

Since the Labrador Expansion Study was filed in 2018, SC3 has been fully commissioned by IOC and is now operational by nature of a short term operational agreement. This agreement allows SC3 to provide additional capacity for the sole use of IOC and is not available to other Labrador West customers.

Hydro is currently in negotiations with IOC with respect to exploring long-term operating arrangements for SC3 where these assets would be available to support all customers. In support of these negotiations, Hydro engaged Stantec Consulting Ltd to develop cost estimates for alternative sources of reactive support to ensure firm supply for loads in western Labrador. Based on results on this analysis, the purchase of a 60 MVAR capacitor bank and 27 MVAR reactor would present the lowest cost alternative if SC3 were not available as a long-term solution. The Labrador West Voltage Support Cost Estimate Summary prepared by Stantec is provided in Appendix D.

4.3 Proposed Capital Project

While negotiations with IOC are ongoing, Hydro proposes to move forward with the western Labrador system additions that are required irrespective of whether SC3 becomes a long-term option or if 60 MVar of capacitor banks are installed to provide for the required reactive support.

These proposed system additions would include the installation of two new 125 MVA transformers and the installation of a 23 MVar capacitor bank.

To ensure firm supply for all customers, the system additions listed above will be supplemented by capacity made available by either SC3 or the purchase of a 60 MVar capacitor bank and 27 MVAR reactor. A final decision and cost determination on this item will be made in the fall of 2020.

[13] As per "Transmission System Analysis – Future Supply of Labrador West," Doc No. TP-R-023, Newfoundland and Labrador Hydro, October 2018 filed as part of Labrador Interconnected System Transmission Expansion Study," Newfoundland and Labrador Hydro, April 3, 2019, rev. 2 (originally filed October 31, 2018).

5.0 Description of Recommended System Additions

The recommended system additions for the Wabush Terminal Station to ensure the ability to meet both the firm transmission capability (with the exception of the loss of L23 or L24) and the firm transformation capacity are defined as follows:

- The installation of two new 125 MVA transformers, to replace 65 MVA transformers T4 and T5. These new transformers are required to ensure that no transformer overloads occur during n-1 contingency situations, as per Transmission Planning Criteria; and
- The installation of 23 MVar of additional capacitor banks. These capacitor banks would provide the necessary reactive voltage support required to ensure firm transfer capacity in the event of the loss of a synchronous condenser.

The following is a summary of the work involved with these system additions (a single-line diagram of the project is provided in Appendix E):

- Removal of 230/46 kV transformers T4 and T5;
- Purchase and installation of two, 230/46 kV 75/100/125 MVA transformers, complete with on-load tap changer and protection upgrades for T5;
- Purchase of one, 23 MVar capacitor bank complete with grounding switches and inrush reactors, to be installed on 46 kV bus B1. Also includes a 72.5 kV Class, 2000 A, 40 kA circuit breaker including current transformers ("CT") and one 72.5 kV Class disconnect switch;
- Purchase and installation of new 4/0 ground grid, equipment grounds, and fence grounding;
- Purchase and installation of new conductors and cables required to interconnect equipment;
- Purchase and installation of new protection and control panels and modifications to existing protection and pontrol panels to accommodate the new capacitor bank;
- Modifications to existing Supervisory Control and Data Acquisition ("SCADA") system to add the new capacitor bank;
- Purchase and installation of electrical connectors, 2" Aluminum bus, insulators, and conductors for one new circuit breaker bay;
- All necessary civil work required to accommodate the new equipment and upgrades; and

- Engineering design study[14] for the capacitor bank addition.

6.0 Conclusion

The P90 baseline load forecast is expected to reach 383.3 MW by the winter of 2045–2046. When considering only Hydro assets, the non-firm capacity of the existing system is limited to 350 MW. To ensure the ability to meet both the firm transmission capability (with the exception of the loss of L23 or L24) and the firm transformation capacity, the following system reinforcements are required:

- Two, new 125 MVA transformers to increase the firm transformer capacity on Bus B2 from 195 MVA to 273.3 MVA; and
- 83 MVar of reactive support to increase the firm capacity of the system from 350 MW to 387 MW.

However, negotiations with IOC are ongoing with respect to the long-term operation of SC3. While a decision will be made with respect to SC3 later in 2020, other upgrades at the Wabush Terminal Station are required irrespective of the outcome of these negotiations. These proposed system additions include the installation of two, new 125 MVA transformers and the installation of a 23 MVar capacitor bank.

To support Hydro's ability to provide firm supply for all customers, the system additions noted above and summarized in Section 5 need to be supplemented by capacity made available by either SC3 or a 60 MVar capacitor bank. A final decision and cost determination on this item will be made in the fall of 2020, at which time Hydro will file a Supplemental Capital Budget Application.

[14] Study to include analysis of harmonics, resonance, and switching.

Appendix A

Single-Line Diagram of Existing Wabush Terminal Station

newfoundland labrador hydro
a nalcor energy company

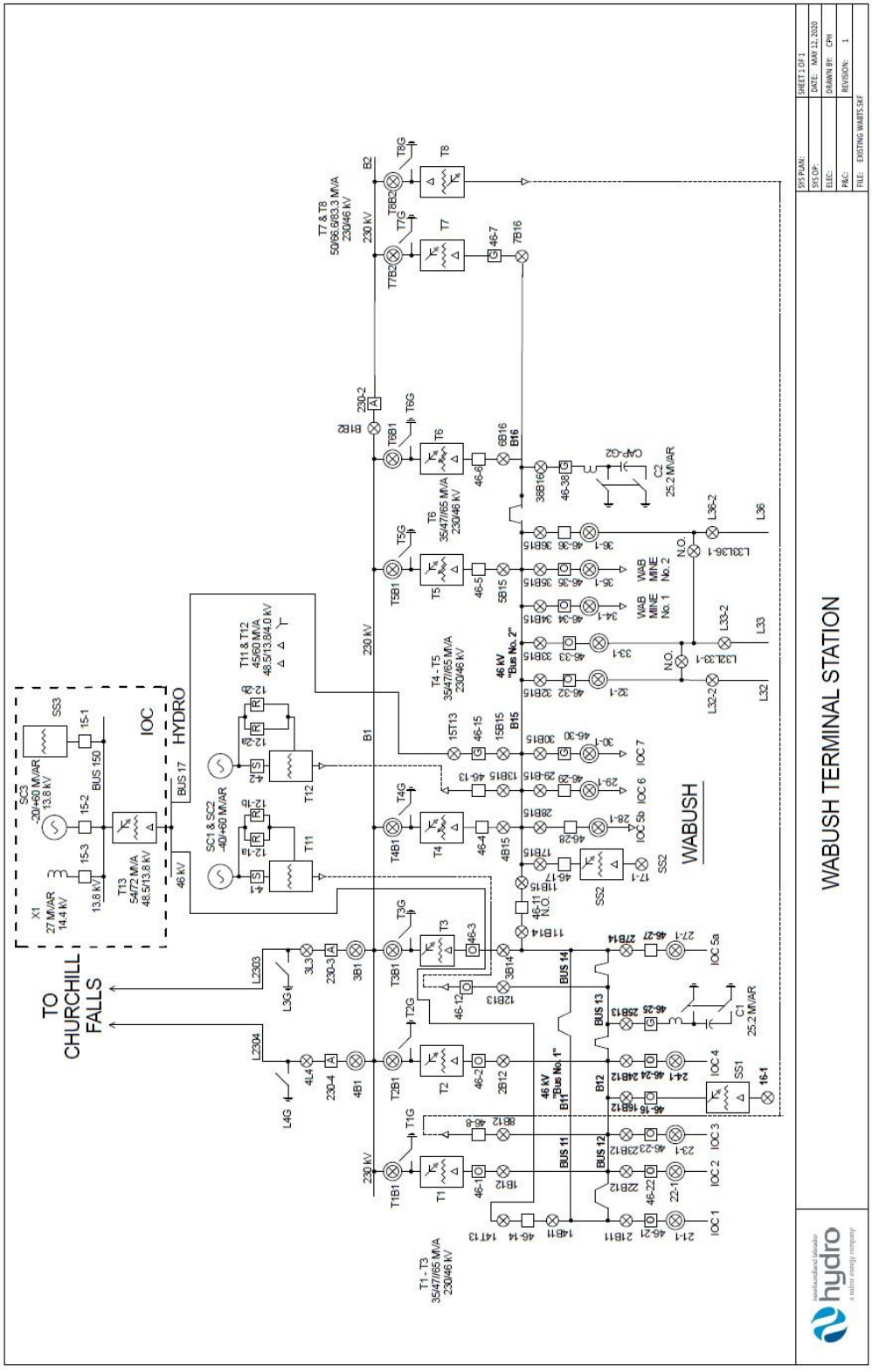

Figure A-1: Existing Wabush Terminal Station Single-Line Diagram

Appendix B

Transformer Capacity Load Flow Analysis

newfoundland labrador hydro
a nalcor energy company

Transformer Capacity Load Flow Analysis Results

Analysis was performed to ensure that there would be no overloads for the loss of the largest transformer at the Wabush Terminal Station. Figure B-1 depicts the Peak P90 Baseline Load Forecast case for the winter of 2045–2046, with 83.3 MVA transformer T7 out of service. With the loss of transformer T7, transformers T4, T5, and T6 are overloaded. The installation of a 125 MVA power transformer is therefore required.

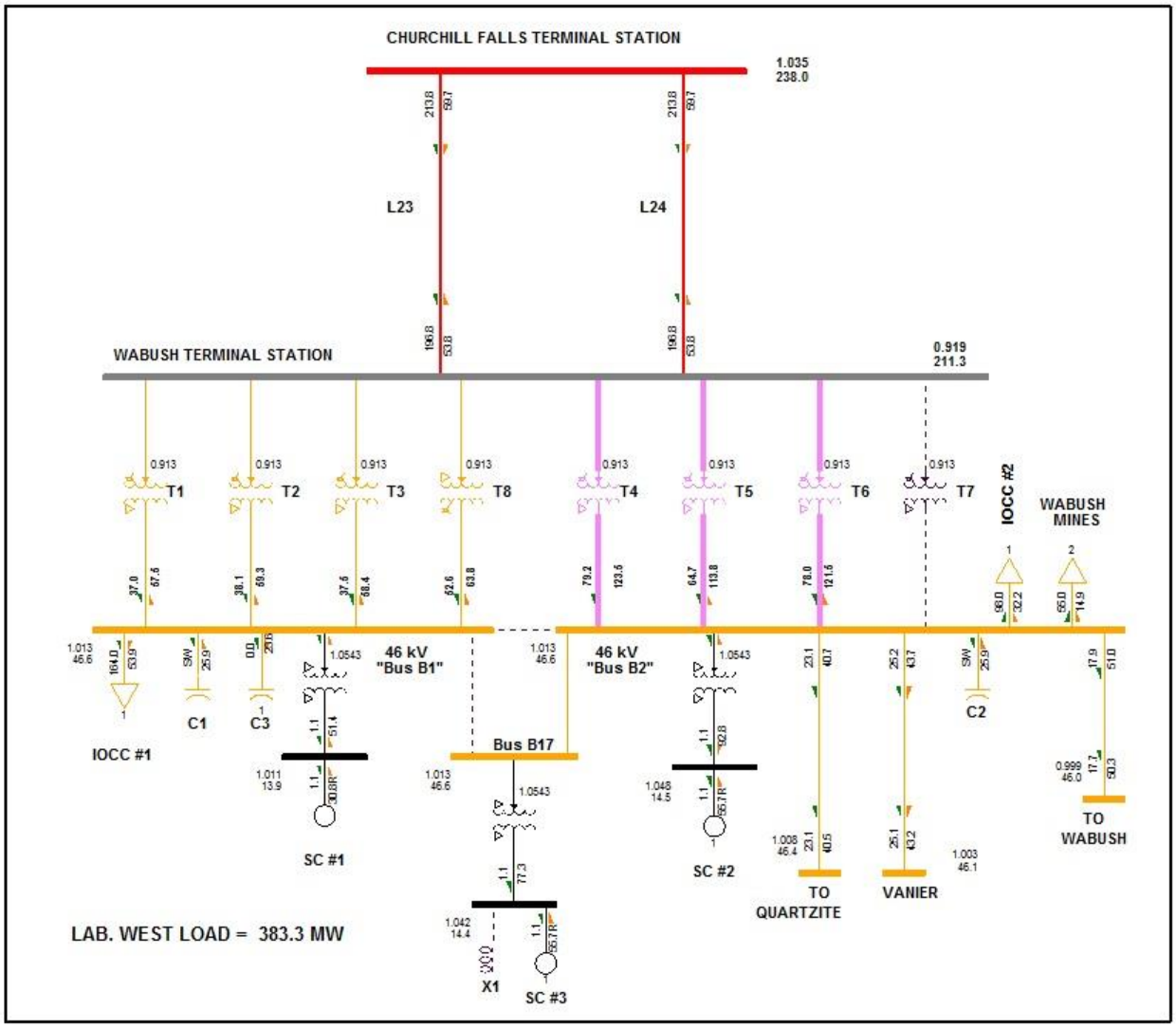

Figure B-1: 2046 Peak P90 Baseline Load Forecast Case with Existing Transformers under Contingency Operations (Loss of T7)

With transformer T4 upgraded to 125 MVA, it becomes the largest transformer at the Wabush Terminal Station. An outage to this unit would therefore reduce the transformation capacity on bus B2 to 213.3 MVA (the sum of transformers T5 (65 MVA), T6 (65 MVA), and T7 (83.3 MVA)). Figure B-2 shows that with the loss of upgraded transformer T4, both transformers T6 and T7 are overloaded. It is therefore a requirement to upgrade at least two transformers to 125 MVA.

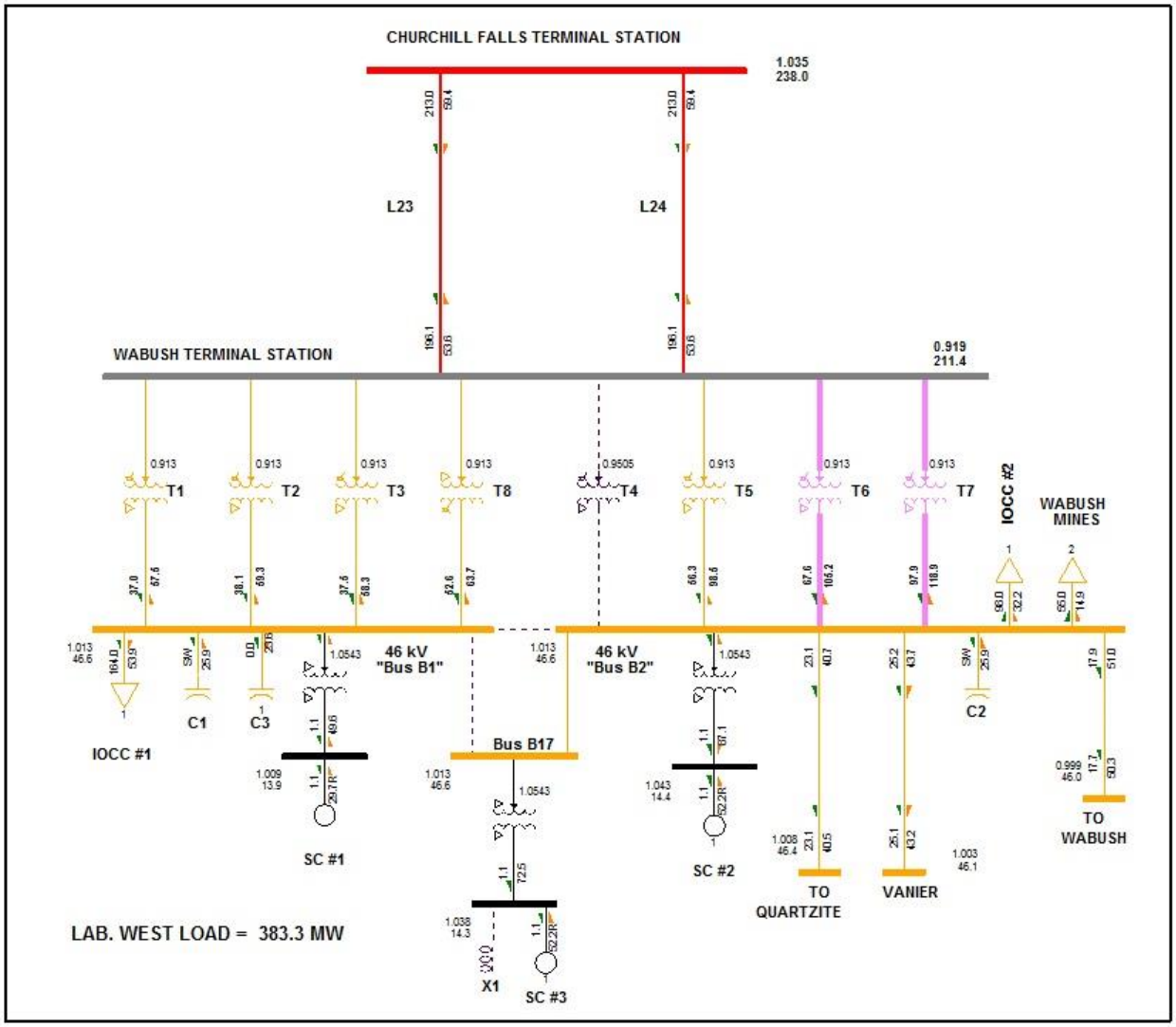

Figure B-2: 2046 Peak P90 Baseline Load Forecast Case with Upgraded T4 under Contingency Operations (Loss of T4)

Figure B-3 shows that when both transformer T4 and T5 are upgraded to 125 MVA, there are no violations with the loss of transformer T4.

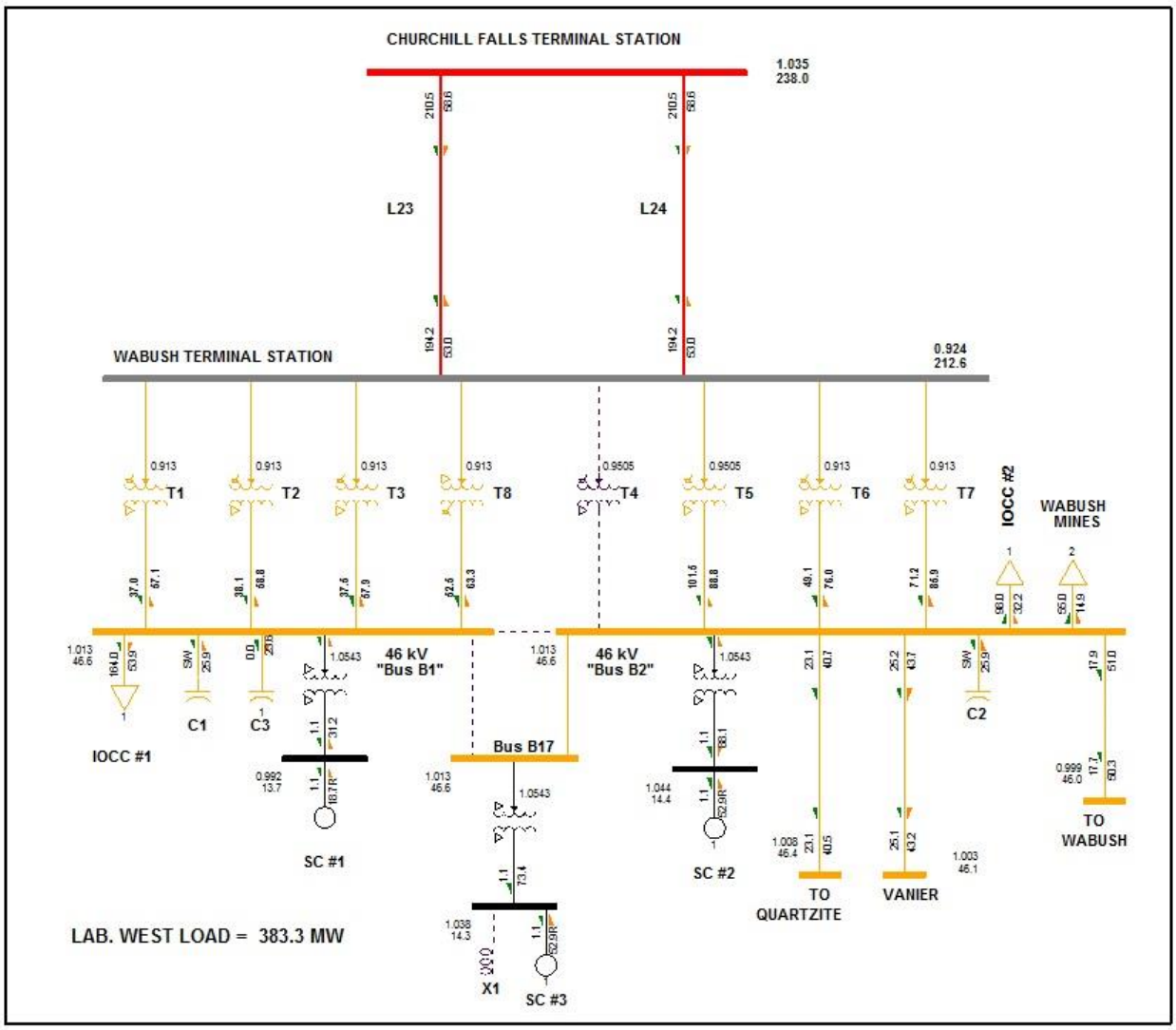

Figure B-3: 2046 Peak P90 Baseline Load Forecast Case with upgraded T4 and T5 under contingency operations (Loss of T4)

It is therefore recommended that two 65 MVA transformers be replaced with 125 MVA units, to ensure that firm loads can be supplied during system peak. The resulting firm transformation capacity on bus B2 is increased to 273.3 MVA (the sum of transformers T5 (125 MVA), T6 (65 MVA), and T7 (83.3 MVA)).

Appendix C

Additional Reactive Support Load Flow Analysis

newfoundland labrador hydro
a nalcor energy company

Additional Reactive Support Load Flow Analysis Results

Analysis was performed to assess the maximum power transfer achievable with the additional 83 MVar of reactive support.

Figure C-1 depicts the power transfer achievable under normal operating conditions with all equipment in service. With the additional 83 MVar of reactive support, as well as the upgraded transformers T4 and T5, the maximum non-firm power transfer capacity at the Wabush Terminal Station is 423 MW, with the limitation being the terminal voltages of SC1 and SC2.

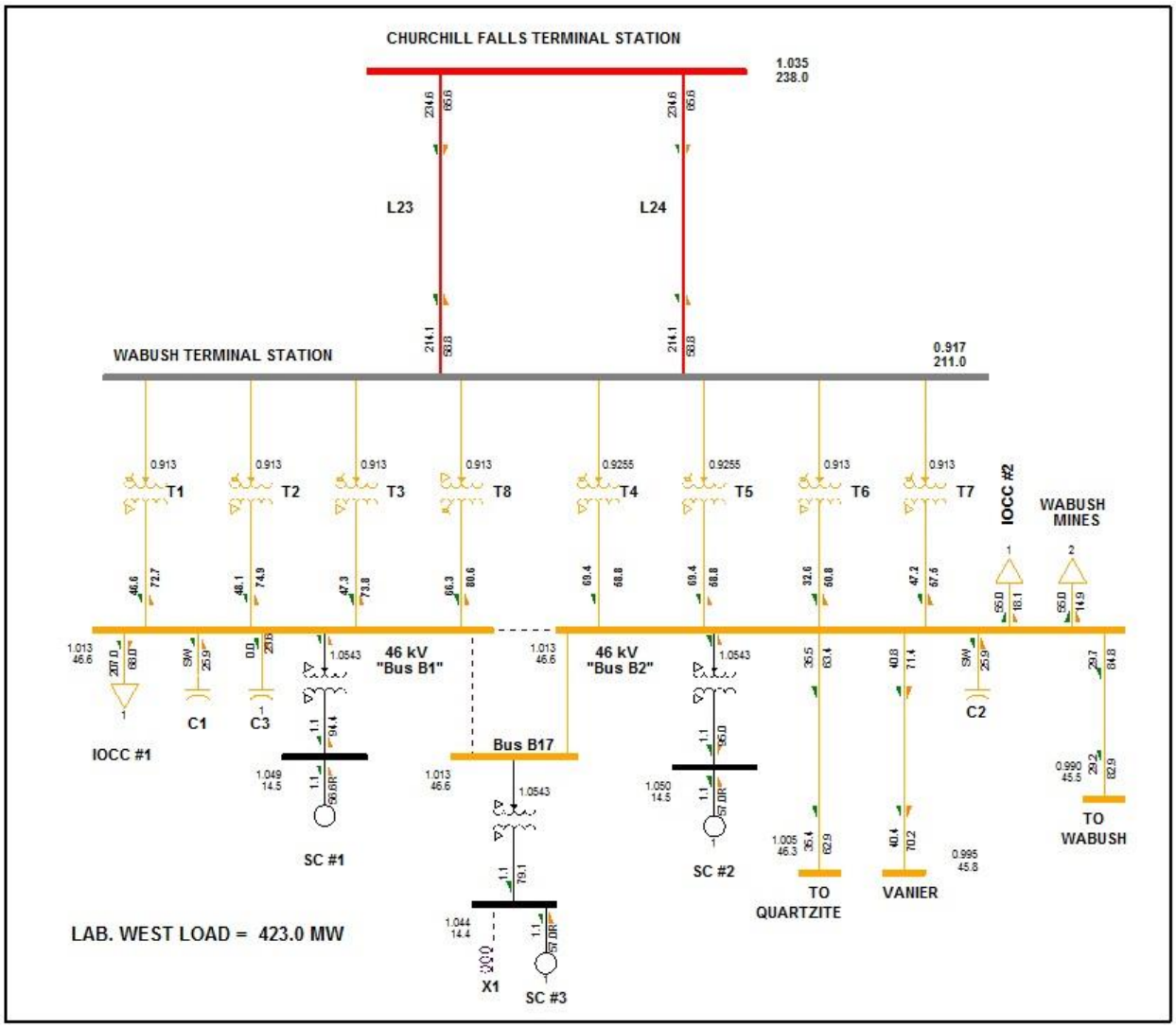

Figure C-1: Wabush Terminal Station with 83 MVar Additional Reactive Support and Transformer Upgrades – Normal Operating Conditions

Figure C-2 depicts the power transfer achievable under contingency operations with the loss of a synchronous condenser. In this scenario, the maximum firm power transfer capacity at the Wabush Terminal Station is 387 MW, with the limitation being the terminal voltage of SC3.

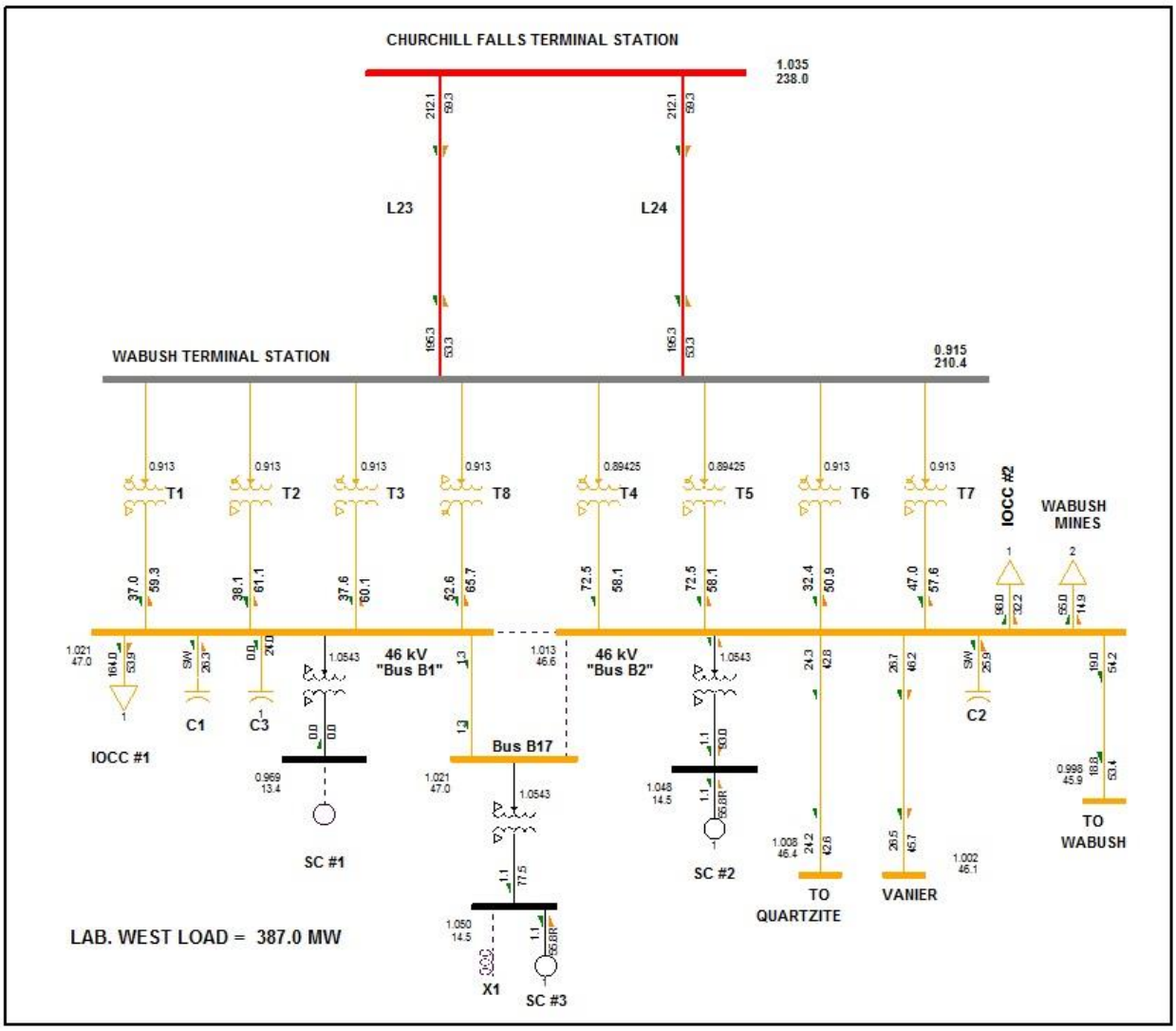

Figure C-2: Wabush Terminal Station with 83 MVar Additional Reactive Support and Transformer Upgrades – Contingency Operations (Loss of a Synchronous Condenser)

Figure C-3 depicts the power transfer achievable under contingency operations with the loss of capacitor C2. In this scenario, the maximum firm power transfer capacity at the Wabush Terminal Station is 401 MW, with the limitation being the terminal voltages of SC1 and SC2. To achieve this transfer capacity, 57 MW of IOC load was transferred from bus B2 to B1.

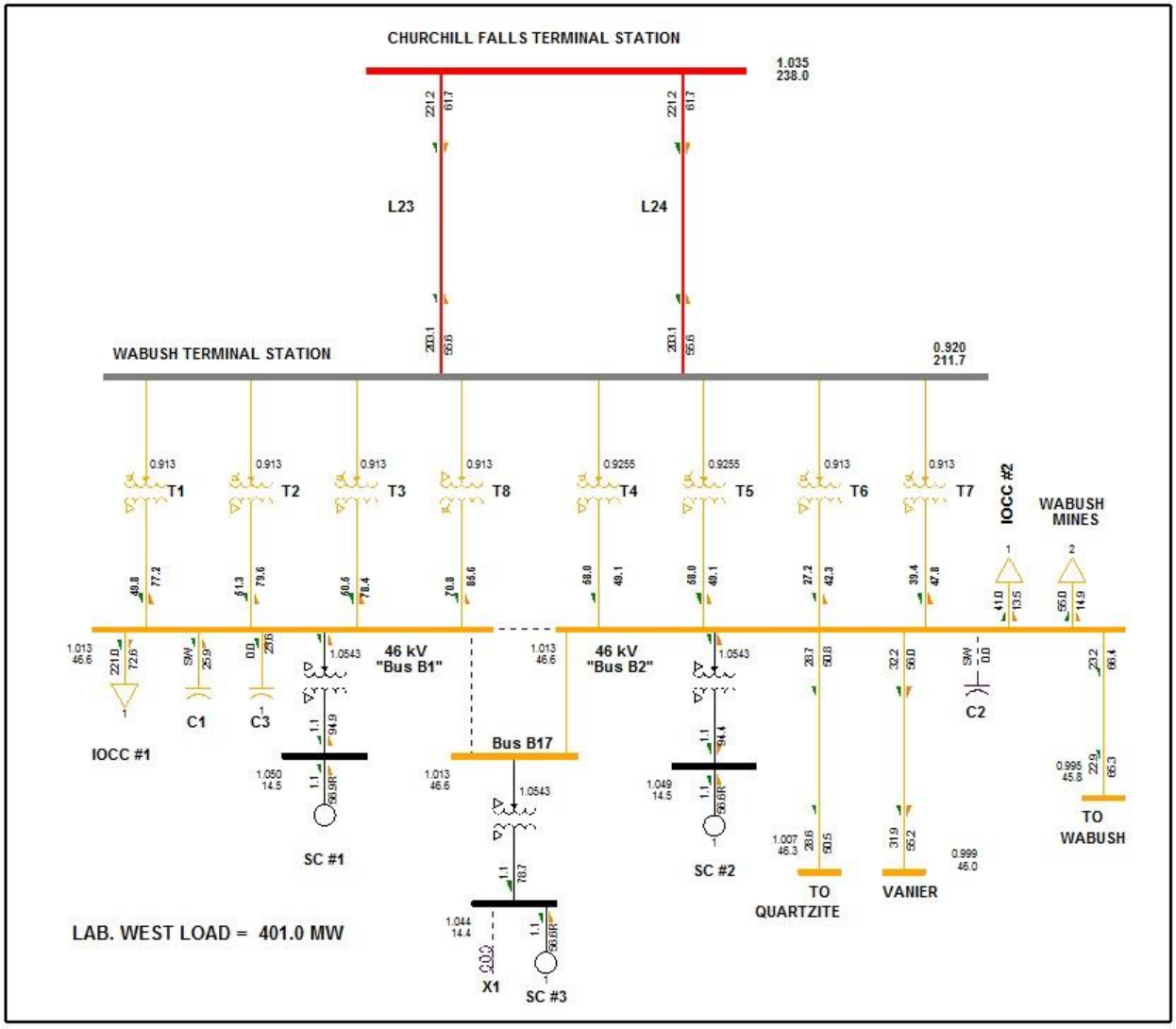

Figure C-3: Wabush Terminal Station with 83 MVar Additional Reactive Support and Transformer Upgrades – Contingency Operations (Loss of Capacitor C2)

Figure C-4 depicts the power transfer achievable under contingency operations with the loss of capacitor C1. In this scenario, the maximum firm power transfer capacity at the Wabush Terminal Station is 403.5 MW, with the limitation being the terminal voltages of SC1 and SC2.

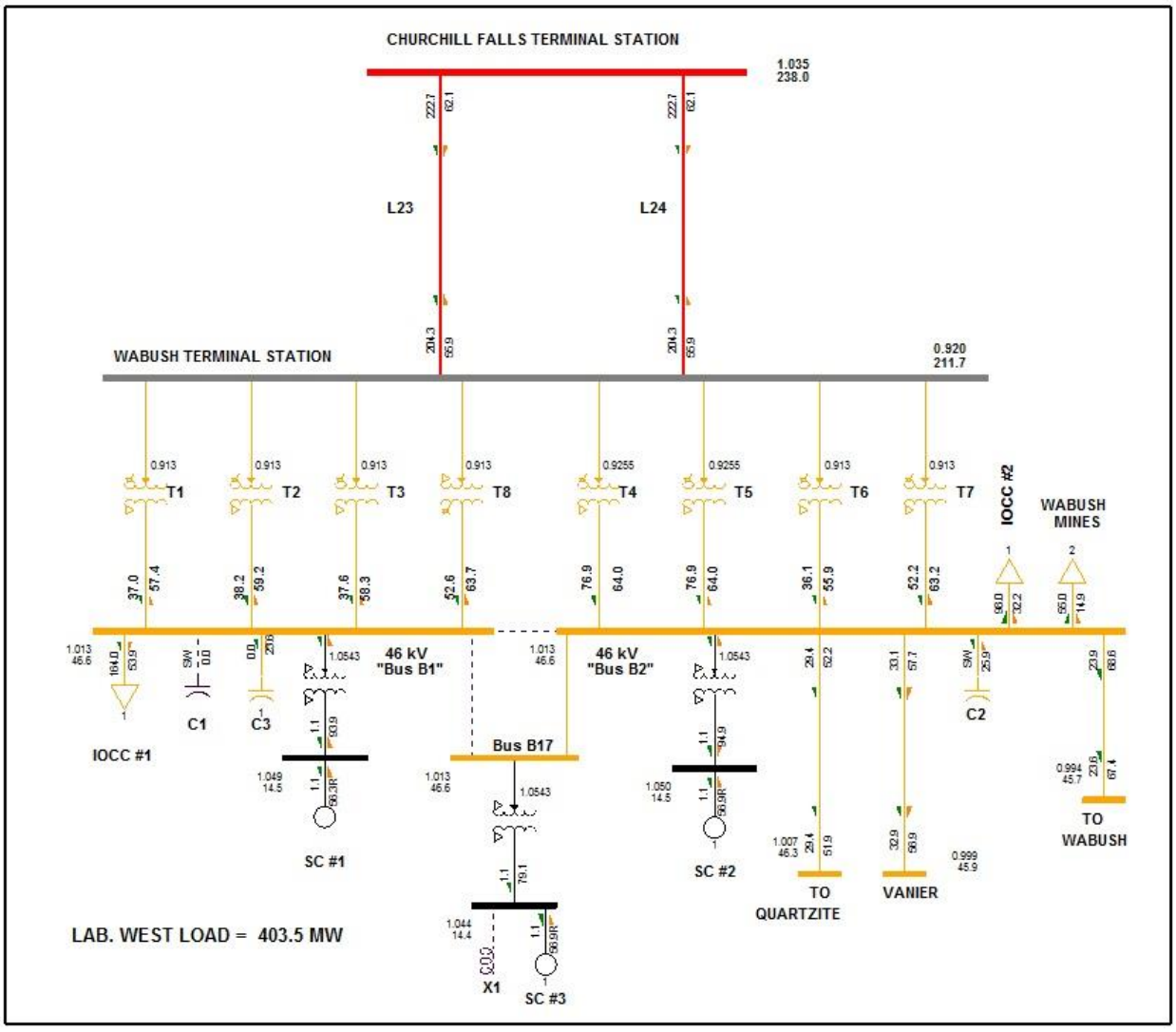

Figure C-4: Wabush Terminal Station with 83 MVar Additional Reactive Support and Transformer Upgrades – Contingency Operations (Loss of Capacitor C1)

Figure C-5 depicts the power transfer achievable under contingency operations with the loss of transformer T4. In this scenario, the maximum firm power transfer capacity at the Wabush Terminal Station is 415 MW with the limitation being the terminal voltages of SC1 and SC2. To achieve this transfer capacity, 48 MW of IOC load was transferred from bus B2 to B1.

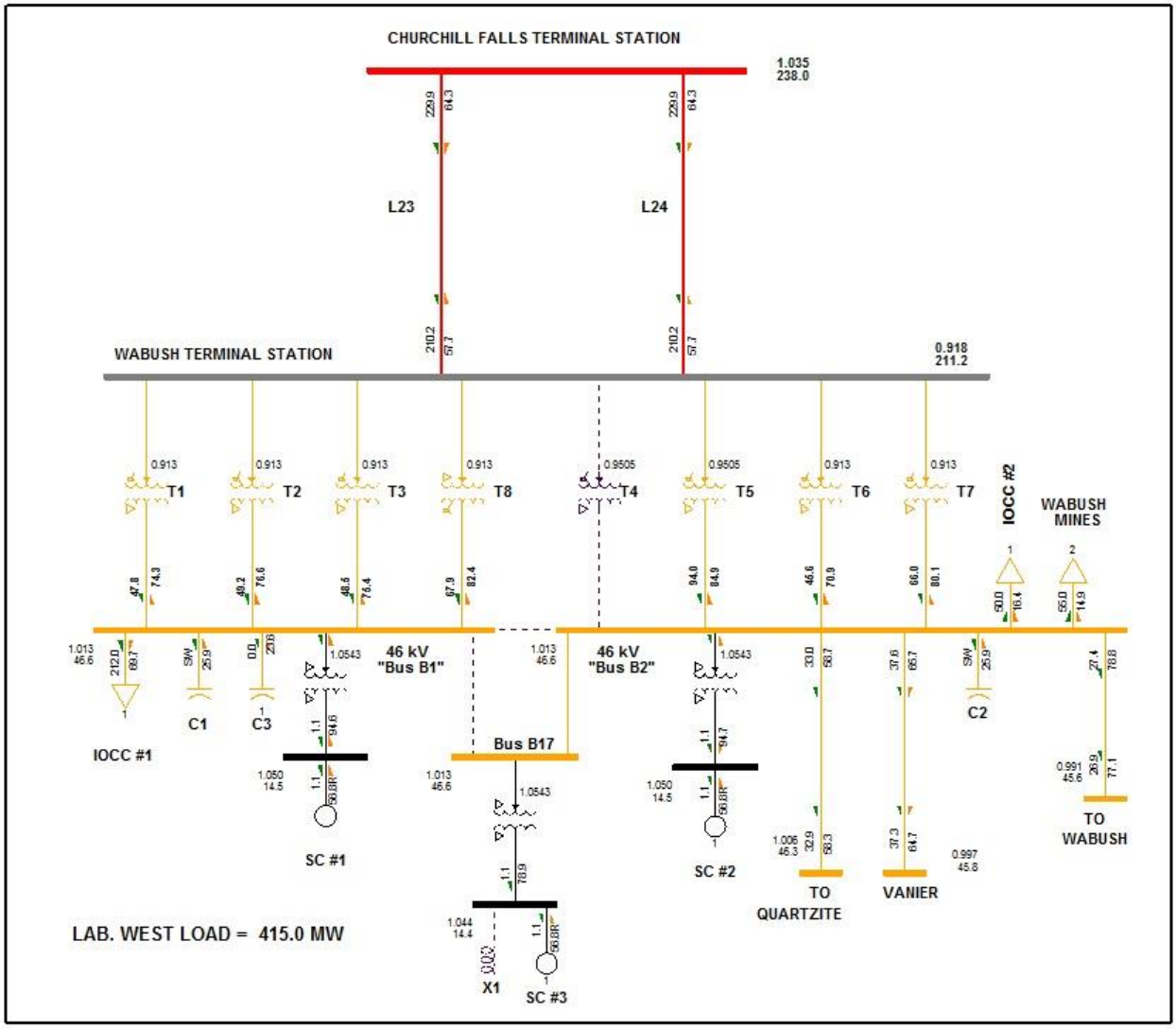

Figure C-5: Wabush Terminal Station with 83 MVar Additional Reactive Support and Transformer Upgrades – Contingency Operations (Loss of Transformer T4)

Figure C-6 depicts the power transfer achievable under contingency operations with the loss of transformer T8. In this scenario, the maximum firm power transfer capacity at the Wabush Terminal Station is 409 MW, with the limitation being the loading of transformer T2 and the terminal voltage of SC2. To achieve this transfer capacity, 24 MW of IOC load was transferred from bus B2 to B1.

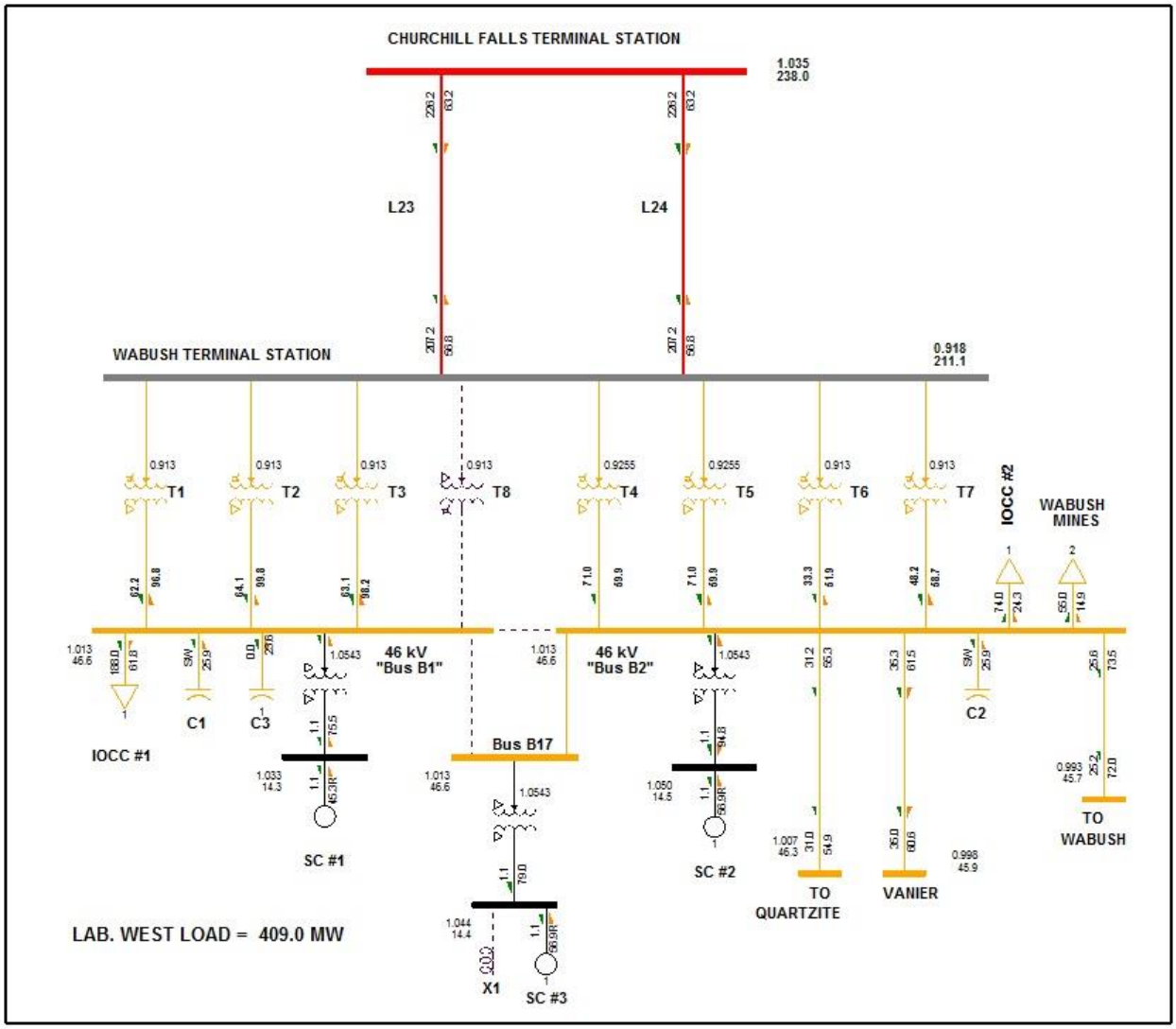

Figure C-6: Wabush Terminal Station with 83 MVar Additional Reactive Support and Transformer Upgrades – Contingency Operations (Loss of Transformer T8)

Appendix D

Stantec Consulting Ltd. – Labrador West Voltage Support Cost Estimate Summary

newfoundland labrador hydro
a nalcor energy company

Labrador West Voltage Support
Cost Estimate Summary

Date: 30 April 2020

Table of Contents

1.0 Background 3
2.0 Scope Description 4
3.0 Budget Estimate 5
4.0 Summary 7
Appendix A 9

2

1.0 Background

In 1997-1998, a failure occurred on synchronous condenser two (SC-2) at the Wabush Terminal Station (WAB TS). To restore full operational capacity to the Wabush Terminal Station (WAB TS), a third synchronous condenser (SC-3) was installed and connected to Bus 2 (Bus 15) in an emergency scenario to act as a replacement while SC-2 repairs were completed. The SC-3 asset is wholly owned by the Iron Ore Company of Canada (IOCC). After SC-2 was repaired, SC-3 was removed from service and minimal maintenance completed. In 2012, IOCC reestablished the SC-3 project with the goal of putting SC3 in service permanently, in the WAB TS. Construction commenced in 2012 and the unit was partially commissioned in September 2014 and was never released for service.

In 2018, Newfoundland and Labrador Hydro (NLH) completed the "Labrador Interconnected System Transmission Expansion Study" which was submitted to The Board of Commissioners of Public Utilities. This study identified that the existing Labrador West transfer capacity is limited to 350MW with all equipment in-service, while the long range forecast is estimated to be 383MW. In order to meet NLH's transmission reliability criteria of meeting forecasted load without system overload conditions while experiencing the loss of a single transmission element , the following base case option was identified as the preferred alternative;

The preferred Alternative of 2018 Study involved the addition of a 23MVAR capacitor bank for voltage support and replacement of transformers T4 and T5 with 125MVA units. This solution assumed that IOC's SC3 unit with its 60MVAR reactive power capability and 27MVAR reactor was available in the base solution without being purchased from IOC. This option gives a firm Labrador West transmission capacity of 383MW with the single loss of any major transmission element with the exception of the 230kV transmission lines. Overall, this solution requires the addition of 83MVARs of reactive voltage support, SC3 and 23MVARs of capacitor banks.

To validate the alternative against NLH's commitment to least cost, reliable power, it was necessary to identify and assess options that would supply up to 83MVARs of reactive voltage support in order to satisfy the 383MW forecasted load. The four options identified listed below, all provide the required reactive voltage support to enable the transfer of 383MW to Labrador West.

1. Addition of 23MVARs of capacitors with IOC SC3 and reactor included, with the purchase of IOC's equipment.

2. Addition of 83MVARs of capacitors and 27MVAR reactor without the purchase of IOC's equipment.
3. Addition of 23MVARs of capacitors with purchase of new 60MVAR synchronous condenser and 27MVAR reactor.
4. Addition of +83 to -27MVAR static VAR compensator.

During the Fall of 2018, IOCC demonstrated a renewed interest in getting SC-3 fully commissioned and operational.

In June 2019, a Memorandum of Understanding (MOU) was signed by IOCC and NLH pertaining to the purchase of SC-3 by NLH. To ensure NLH's commitment to least cost reliable service, Hydro reviewed the high level cost estimates and there was reason to believe SC-3 was not the least cost option available to the ratepayers. To validate Hydro's high level cost estimate, NLH hired Stantec Consulting Ltd. to complete a detailed AACE Class 3 (Association of the Advancement of Cost Engineering) capital cost estimate for the four identified options.

2.0 Scope Description

The capital cost estimate consists of the following scope of work:
- Provide detailed, AACE Class 3 estimates for the following alternatives:
  - Option 1: New 23 MVAR Capacitor Bank (including purchase of SC-3)
  - Option 2: 83 MVAR Capacitor Bank plus 27 MVAR Reactor
  - Option 3: New Synchronous Condenser and 23 MVAR Capacitor Bank
  - Option 4: +83/-27 MVAR Static VAR Compensator

The assumptions made in the Stantec estimate are as follows:
- Estimates include all Engineering, Procurement, Construction, and Commissioning activities required to place the assets into service, including civil works as required to expand existing station footprint.
- Costs for major equipment have been obtained by taking an average of costs obtained from vendor budgetary quotations.
- Costs for minor equipment have been obtained from RSMeans Data, Version 8.7.
- Engineering costs have been estimated as 10% of the capital cost estimate for Option 1 and reduced to 5% for Options 2, 3 and 4 as the percentage is typically lower for larger projects.

• Contractor Construction Management/Overheads costs have been estimated as 5% of the capital cost estimate.
• CMR costs have been estimated as $65/day per Diem + $150/day hotel, gas, car + $90/hr labour.
• Project Management and Overhead costs have been estimated as 10% of the capital cost estimate for Option 1 and reduced to 5% for Options 2, 3 and 4 as the percentage is typically lower for larger projects.

Please refer to the Stantec report in "Appendix A: Labrador West Reactive Power Voltage Support Capital Cost Estimate" for further details.

3.0 Budget Estimate

3.1) The project budget estimate for Option #1 is provided in table 1.

Option #1 - New 23 MVAR Capacitor Bank (including purchase of SC-3)		
1)	Material and Construction Labour	$1,172,000.00
2)	Engineering, Project Management, Contract Management, Handover	$381,000.00
3)	Escalation	$85,000.00
4)	Interest	$56,000.00
5)	Contingency (20%)	$311,000.00
Sub-Total		$2,005,000.00
Purchase of SC-3 from IOCC (NBV as of Dec. 31, 2018)		$30,573,000.00
Total		**$32,578,000.00**

Notes:
-Estimate 1.5 to 2 months for engineering, 6 months for long lead item delivery, and 2 months for construction (after delivery of equipment): Total ~ 9.5 to 10 months
- For the purposes of this estimate, the cash flow is distributed over two years (typical with our normal project execution) beginning in 2021.
- Forecast of escalation rates is derived from Conference Board of Canada forecast.

5

3.2) The project budget estimate for Option #2 is provided in table 2.

Option #2 - New 83 MVAR Capacitor Bank plus 27 MVAR Reactor			
1)	Material and Construction Labour	$	4,917,000.00
2)	Engineering, Project Management, Contract Management, Handover	$	929,000.00
3)	Escalation	$	320,000.00
4)	Interest	$	204,000.00
5)	Contingency (20%)	$	1,170,000.00
		$	**7,540,000.00**

Notes:
- Estimate 2.5 to 3 months for engineering, 6 months for long lead item delivery, and 2 months for construction (after delivery of equipment) : Total ~ 10.5 to 11 months
- For the purposes of this estimate, the cash flow is distributed over two years (typical with our normal project execution) beginning in 2021.
- Forecast of escalation rates is derived from Conference Board of Canada forecast.

3.3) The project budget estimate for Option #3 is provided in table 3.

Option #3 - New +60 MVA Synchronous Condenser plus 23 MVAR Capacitor Bank			
1)	Material and Construction Labour	$	14,011,000.00
2)	Engineering, Project Management, Contract Management, Handover	$	2,547,000.00
3)	Escalation	$	1,211,000.00
4)	Interest	$	847,000.00
5)	Contingency (20%)	$	3,312,000.00
		$	**21,928,000.00**

Notes:
- Estimate 3 to 4 months for engineering, 16 months for long lead item delivery, and 6-8 months for construction (after delivery of equipment) : Total ~ 22 to 24 months
- For the purposes of this estimate the cash flow is over three years beginning in 2021.
- Forecast of escalation rates is derived from Conference Board of Canada forecast.

6

3.4) The project budget estimate for Option #4 is provided in table 4.

Option #4 - New +83/-27 MVAR Static VAR Compensator			
1)	Material and Construction Labour	$	13,374,000.00
2)	Engineering, Project Management, Contract Management, Handover	$	2,442,000.00
3)	Escalation	$	1,159,000.00
4)	Interest	$	804,000.00
5)	Contingency (20%)	$	3,163,000.00
		$	**20,942,000.00**

Notes:
- Estimate 3 to 4 months for engineering, 16 months for long lead item delivery, and 6-8 months for construction (after delivery of equipment) : Total ~ 22 to 24 months
- For the purposes of this estimate the cash flow is over three years beginning in 2021.
- Forecast of escalation rates is derived from Conference Board of Canada forecast.

4.0 Summary

In the fall of 2019, NLH completed an estimate for the design, supply, installation and commissioning of three new 25 MVAR Cap Banks. As part of that analysis, IOCC were informed the overall price was approx. $14.8 million. The NLH estimate is considered a higher level, conservative estimate to install capacitor banks and associated equipment. This was based on a general maturity level of the work scope and is considered an AACE Class 5 cost estimate. The Stantec estimate is based on a work scope with a much higher level of definition and therefore more appropriate to be defined as a Class 3 cost estimate. The differences between the estimate classes account for the variation in the overall project costs. The AACE Generic Cost Estimate Classification Matrix can be found below in Table #5:

Table 5 - AACE Generic Cost Estimate Classification Matrix

	Primary Characteristic	*Secondary Characteristic*			
ESTIMATE CLASS	**MATURITY LEVEL OF PROJECT DEFINITION DELIVERABLES** Expressed as % of complete definition	**END USAGE** Typical purpose of estimate	**METHODOLOGY** Typical estimating method	**EXPECTED ACCURACY RANGE** Typical +/- range relative to index of 1 (i.e. Class 1 estimate) [a]	**PREPARATION EFFORT** Typical degree of effort relative to least cost index of 1 [b]
Class 5	0% to 2%	Screening or feasibility	Stochastic (factors and/or models) or judgment	4 to 20	1
Class 4	1% to 15%	Concept study or feasibility	Primarily stochastic	3 to 12	2 to 4
Class 3	10% to 40%	Budget authorization or control	Mixed but primarily stochastic	2 to 6	3 to 10
Class 2	30% to 75%	Control or bid/tender	Primarily deterministic	1 to 3	5 to 20
Class 1	65% to 100%	Check estimate or bid/tender	Deterministic	1	10 to 100

Notes: [a] If the range index value of "1" represents +10/-5%, then an index value of 10 represents +100/-50%.
[b] If the cost index value of "1" represents 0.005% of project costs, then an index value of 100 represents 0.5%.

Source: AACE., *Cost Estimate Classification System*, AACE Recommended Practices. 2011.

The overall summary of all the Stantec options can be found in table 6 below:

Cost Estimate Summary - Options 1 -4		
Option #1	New 23 MVAR Capacitor Bank (including purchase of SC-3)	$ 32,578,000.00
Option #2	New 83 MVAR Capacitor Bank plus 27 MVAR Reactor	$ 7,540,000.00
Option #3	New +60 MVA Synchronous Condenser plus 23 MVAR Capacitor Bank	$ 21,928,000.00
Option #4	New +83/-27 MVAR Static VAR Compensator	$ 20,942,000.00

8

Appendix E

Single-Line Diagram of Recommended Upgrades

newfoundland labrador hydro
a nalcor energy company

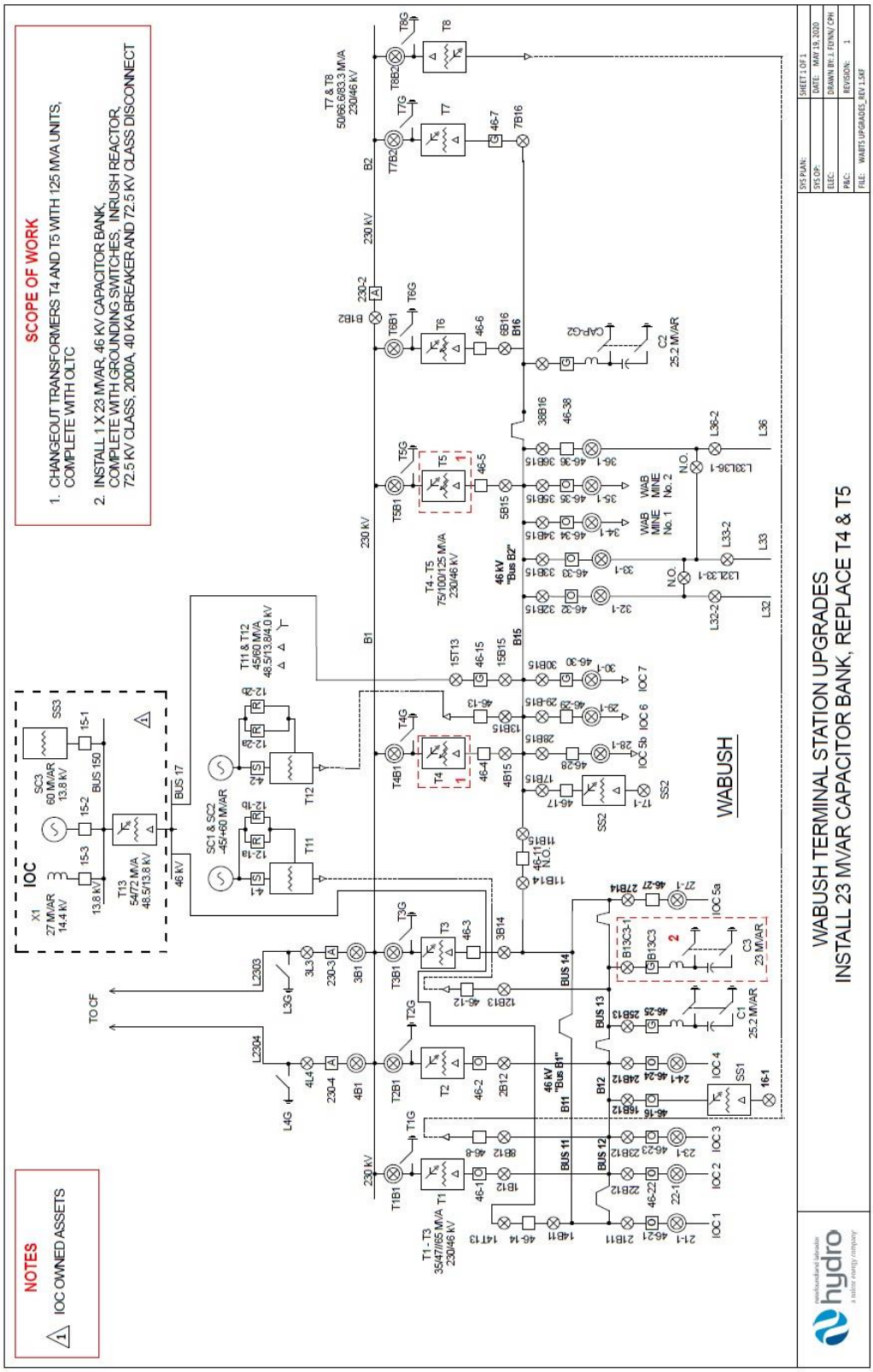

Figure E-1: Single-Line Diagram – Wabush Terminal Station System Additions

14. Upgrades for Future Retirement of Stephenville Gas Turbine



2021 Capital Budget Application

Upgrades for Future Retirement of Stephenville Gas Turbine

July 2020

A report to the Board of Commissioners of Public Utilities

newfoundland labrador hydro
a nalcor energy company

Executive Summary

Newfoundland and Labrador Hydro ("Hydro") is planning to retire the Stephenville Gas Turbine in 2022. In order to maintain Hydro's Transmission Planning Criteria, Hydro is proposing to complete modifications to the Bottom Brook Terminal Station and the Stephenville Terminal Station to ensure adequate supply of power to the town of Stephenville and surrounding area.

Appendix A contains Hydro's Transmission Planning Technical Note. To ensure adequate supply of power, it is necessary to add a transformer and associated equipment to the Bottom Brook Terminal Station, complete grounding system modifications at the Bottom Brook Terminal Station and the Stephenville Terminal Station, and reconfigure the Stephenville Terminal Station due to the removal of the T1 transformer and the installation of a second station service supply.

The cost of this project is estimated at $9,918,800 and it is expected to be completed in 2022.

Contents

Executive Summary i
1.0 Introduction 1
2.0 Background 1
2.1 Existing System 1
2.2 Operating Experience 2
2.3 Maintenance History 2
3.0 Justification 2
4.0 Analysis 3
4.1 Identification of Alternatives 3
4.2 Evaluation of Alternatives 3
4.2.1 Alternative 1: Uprate Bottom Brook Terminal Station Transformer T2 3
4.2.2 Alternative 2: Install new 230/66kV Transformer in Bottom Brook 3
4.2.3 Alternative 3: Deferral 4
4.2.4 Alternative 4: Perform Upgrades for the Future Retirement of the Stephenville Gas Turbine at Bottom Brook TS and Stephenville TS 4
4.3 Recommended Alternative 4
5.0 Project Description 5
6.0 Conclusion 7

List of Attachments

Attachment 1: TP-TN-095 – Transmission System Impact – Stephenville Gas Turbine Retirement

1.0 Introduction

Under normal operation, customer loads in the Stephenville area are supplied at the Stephenville Terminal Station via the 230 kV transmission line TL209. Newfoundland Power operates a 66 kV transmission network that is used to supply individual customers. If an outage is experienced on transmission line TL 209 or Stephenville Terminal Station transformer T3 during peak conditions, Hydro operates the 50 MW Stephenville Gas Turbine to supply customer load. Under light load conditions, the Stephenville area can be supplied via Newfoundland Power's 66 kV network between the Bottom Brook Terminal Station and the Stephenville Terminal Station; however, under heavy load conditions, the Bottom Brook Terminal Station transformer T2 does not have the capacity to supply the Stephenville area without the support of the Stephenville Gas Turbine. Therefore, a transformer or transmission line outage after the retirement of the Stephenville Gas Turbine, which is scheduled to occur in 2022, could result in unserved energy. Such an exposure is a violation of Hydro's Transmission Planning Criteria.[1]

Upgrades are required at the Bottom Brook Terminal Station and Stephenville Terminal Station to minimize the risk of customer outages due to a transformer or transmission line failure. These upgrades include: (i) the addition of a power transformer and associated equipment at the Bottom Brook Terminal Station, (ii) grounding system modifications at the Bottom Brook Terminal Station and the Stephenville Terminal Station, and (iii) the reconfiguration of the Stephenville Terminal Station due to the removal of transformer T1 and the installation of a second station service supply.

2.0 Background

2.1 Existing System

Hydro operates the Stephenville Gas Turbine to provide back up power on the Bottom Brook – Stephenville loop. Bottom Brook Terminal Station transformer T2 is a 138/66 kV, 15/20/25 MVA transformer which services the Stephenville area via Newfoundland Power's Wheelers Substation in the event of a failure of transmission line TL 209 or the 230/66 kV transformer T3 in the Stephenville Terminal Station. Transformer T2 at the Bottom Brook Terminal Station does not have the capacity to supply the entire Stephenville area during peak conditions when the Stephenville Gas Turbine is not in service.

[1] When the Stephenville Gas Turbine is removed from service, customers in the Stephenville–Bottom Brook loop would be the only customers within a looped network in the Island transmission system with an exposure for unserved energy resulting from a transformer or transmission line outage. In all other looped networks, such an exposure would be considered a violation to the Transmission Planning Criteria.

The Newfoundland and Labrador System Operator requires 230 kV terminal stations to have two station service feeds. Currently, the two station service sources in the Stephenville Terminal Station are transformer GT1, which is the main supply, and transformer SS1 via transformer T1, which is the backup supply.

The Stephenville Terminal Station currently has a 66 kV ring bus arrangement to provide flexibility of supply to the 66 kV network from the two sources of supply—transmission line TL 209 and the Stephenville Gas Turbine. The ring bus will no longer be required once the gas turbine is removed.

2.2 Operating Experience

The existing operating philosophy during an outage to transmission line TL 209 is to use the Stephenville Gas Turbine to supply Stephenville and surrounding area customers during load conditions greater than 25 MVA (the rating of the Bottom Brook Terminal Station transformer T2). The peak load at Stephenville Terminal Station is 51.4 MVA. As the gas turbine is scheduled to be decommissioned in 2022, additional transformer capacity is required at Bottom Brook Terminal Station.

2.3 Maintenance History

This project is required to meet Transmission Planning Criteria after the Stephenville Gas Turbine is removed from service. Maintenance history is not applicable to the justification of this project.

3.0 Justification

After the retirement of the Stephenville Gas Turbine, the existing configuration of supplying Stephenville area customers via Bottom Brook Terminal Station transformer T2 and Newfoundland Power transmission line 400L will not provide full back up capacity. Without the Stephenville Gas Turbine in service, the loss of 230 kV transmission line TL 209 and/or Stephenville Terminal Station transformer T3 could result in customer interruption and/or outages and is a violation of the Transmission Planning Criteria.

Hydro performed a probabilistic reliability analysis to assess the impact of an outage to Stephenville Terminal Station transformer T3 or transmission line TL 209 on customers in the Stephenville area. Using the 2019 load profile of Stephenville along with the 25 MW backup supply option provided by Bottom Brook Terminal Station transformer T2, the Expected Unserved Energy (“EUE”) was calculated to be 94 MWh, equating to the interruption of approximately 4,400 customers. A scenario reflecting the failure of Stephenville Terminal Station transformer T3 during peak load conditions was also analyzed. In this

scenario, the spare 230/66 kV power transformer from Hardwoods Terminal Station would need to be relocated to Stephenville for emergency replacement, which would likely require up to a month to complete. During this time, the capacity available to serve customers in the Stephenville area would be limited to 25 MW. If this occurred during the peak month, the EUE in this scenario would likely exceed 8,000 MWh. Exposure under either situation is an unacceptable risk to customer reliability.

4.0 Analysis

4.1 Identification of Alternatives

Hydro evaluated the following alternatives:

- Alternative 1: Uprate Bottom Brook Terminal Station Transformer T2;
- Alternative 2: Install new 230/66 kV transformer at Bottom Brook Terminal Station;
- Alternative 3: Deferral; and
- Alternative 4: Perform upgrades for the future retirement of the Stephenville Gas Turbine at the Bottom Brook Terminal Station and the Stephenville Terminal Station.

4.2 Evaluation of Alternatives

4.2.1 Alternative 1: Uprate Bottom Brook Terminal Station Transformer T2

Replacing the existing Bottom Brook Terminal Station Transformer T2 with a larger unit is not recommended as it is not a technically viable solution. Analysis of load flow simulations using the 2029 peak load forecast and 2019 real-time load data for the Stephenville and Bottom Brook Terminal Stations' loads show that Bottom Brook Terminal Station transformers T1 and T3 would be overloaded by supplying Stephenville from transmission line 400L through an uprated Bottom Brook Terminal Station transformer T2 during loss of either transmission line TL 209 or Stephenville Terminal Station transformer T3. Overload conditions could necessitate the replacement of Bottom Brook Terminal Stations transformers T1 and T3.

4.2.2 Alternative 2: Install new 230/66kV Transformer in Bottom Brook

Installing a new 230/66kV transformer at the Bottom Brook Terminal Station and maintaining Hydro's spare transformer in the Hardwoods Terminal Station is a technically viable option; however, it is not recommended as it is not the least-cost alternative. The exposure to unserved energy for the loss of a power transformer is low due to: (i) the reliability of power transformers, (ii) the n-1 capacity in the

looped networks, and (iii) short-term overload capabilities. Therefore, purchasing a new transformer and maintaining a spare transformer in Hardwoods is more expensive than other alternatives and is not required to address the concern.

4.2.3 Alternative 3: Deferral

Deferral is not recommended as the necessary upgrade work would not be complete by 2022 to align with the scheduled retirement of the Stephenville Gas Turbine; therefore, it is not a technically viable solution. The 230 kV network within the Island Interconnected System is part of the primary transmission system according to the Transmission Planning Criteria, which means that no single system event shall result in the interruption of load, firm imports, or export commitments. Deferring the necessary upgrades would leave exposure for unserved load in the event of a transformer or transmission outage when Stephenville Gas Turbine is removed from service, which would be a violation to the Transmission Planning Criteria.

4.2.4 Alternative 4: Perform Upgrades for the Future Retirement of the Stephenville Gas Turbine at Bottom Brook TS and Stephenville TS

In this alternative, upgrade work would be completed in the Bottom Brook Terminal Station and the Stephenville Terminal Station to enable Hydro to supply customers of the Stephenville area during the loss of Stephenville Terminal Station transformer T3 or transmission line TL 209 after the retirement of Stephenville Gas Turbine in 2022. This alternative will enable Hydro to remain compliant with its Transmission Planning Criteria.

4.3 Recommended Alternative

Hydro recommends proceeding with the upgrades to the Stephenville Terminal Station and the Bottom Brook Terminal Station to maintain reliability for customers of the Stephenville area during an outage to either the Stephenville Terminal Station transformer T3 or transmission line TL 209 after the retirement of the Stephenville Gas Turbine.

5.0 Project Description

The scope of work includes the design, procurement, construction, and commissioning of equipment in the Stephenville Terminal Station and Bottom Brook Terminal Station as follows:

- Bottom Brook Terminal Station:
  - Installation and assembly of spare 230/66 kV, 40/53.3/66.7 MVA transformer in Bottom Brook Terminal Station;
  - Procurement and installation of:
    - A transformer oil containment system;
    - One, 230 kV, 1200 A circuit breaker;
    - One, 72.5 kV, 2000 A circuit breaker;
    - Two, 230 kV, 1200 A motor operated disconnect switches;
    - Three, 72.5 kV, 1200 A disconnect switches;
    - Three, 72.5 kV potential transformers;
    - 66 kV underground cables; and
    - Power and control cables for new equipment;
  - Relocation and installation of one 72.5 kV, 2000 A circuit breaker;
  - Protection, control, and communications upgrades for new equipment;
  - Removal of existing concrete foundations;
  - Installation of concrete foundations for new equipment;
  - Installation of buswork and take off structures including overhead conductor; and
  - Commissioning of new equipment.
- Stephenville Terminal Station:
  - Removal of two, 72.5 kV circuit breakers;
  - Removal of five, 72.5 kV disconnect switches;
  - Electrical isolation of Stephenville transformer T1;

- Procurement and installation of:
  - One, 66/0.6 kV grounding transformer;
  - One, 72.5 kV power fuses; and
  - Power and control cables for new equipment;
- Installation of concrete foundations for new equipment;
- Protection, control and communications upgrades for new equipment;
- Modification of buswork; and
- Commissioning of new equipment.

With the Stephenville Gas Turbine removed, the Bottom Brook Terminal Station transformer T2 will remain in service as a grounding transformer to provide the 66 kV ground source.

The estimate for this project is shown in Table 1.

Table 1: Project Estimate ($000)

Project Cost	2021	2022	Beyond	Total
Material Supply	410.0	2,034.0	0.0	**2,444.0**
Labour	677.9	814.8	0.0	**1,492.7**
Consultant	92.0	312.8	0.0	**404.8**
Contract Work	0.0	3,225.4	0.0	**3,225.4**
Other Direct Costs	40.3	89.4	0.0	**129.7**
Interest and Escalation	66.1	617.8	0.0	**683.9**
Contingency	244.0	1,295.3	0.0	**1,539.3**
Total	**1,530.3**	**8,389.5**	**0.0**	**9,919.8**

The anticipated project schedule is shown in Table 2.

Table 2: Project Schedule

Activity	Start Date	End Date
Planning:		
Scope, schedule, cost, risk, quality and communications planning	January 2021	February 2021
Design:		
Site visit, engineering design, and outage scheduling	March 2021	March 2022
Procurement:		
Specify and order materials and tender and awarding of contracts	May 2021	July 2022
Construction:		
Installation of new equipment	May 2022	November 2022
Commissioning:		
Commissioning of new equipment	August 2022	November 2022
Closeout:		
As-built drawing review, project financial closeout, and post-implementation review	November 2022	December 2022

6.0 Conclusion

The Stephenville Gas Turbine is scheduled to be removed from service in 2022. Without upgrades, customers in the Stephenville area will be exposed to the possibility of unserved energy as a result of either a transformer or transmission line outage. This exposure is a violation to Hydro's Transmission Planning Criteria. To eliminate the exposure, Hydro proposes to: (i) add a transformer and associated equipment to the Bottom Brook Terminal Station, (ii) complete grounding system modifications at the Bottom Brook Terminal Station and the Stephenville Terminal Station, and (iii) reconfigure the Stephenville Terminal Station due to the removal of transformer T1 and the installation of a second station service supply.

Attachment 1

TP-TN-095 – Transmission System Impact – Stephenville Gas Turbine Retirement

newfoundland labrador hydro
a nalcor energy company

TP-TN-095

Transmission System Impact
Stephenville Gas Turbine Retirement

1 Purpose

The purpose of this technical note is to assess the transmission system impacts to the town of Stephenville and surrounding area that would result from retirement of the Stephenville Gas Turbine.[1]

2 Introduction

Under normal operation, customer loads in the Stephenville area are supplied at the Stephenville Terminal Station ("SVL") via the 230 kV transmission line TL209 (Bottom Brook – Stephenville). Newfoundland Power operates a 66 kV transmission network that is used to supply individual 66/12.5 kV and 66/25 kV substations and distribution customers.

A single-line diagram for Stephenville Terminal Station is provided in Figure 1. The station includes a single 230/66 kV, 40/53.3/66.7 MVA power transformer, T3. For loss of this power transformer or 230 kV transmission line TL209 during peak load conditions, the Gas Turbine is placed in operation in generate mode to supply customer load. Under light load conditions, with transformer T3 or transmission line TL209 out of service, the 138/66 kV transformer, T2, at Bottom Brook Terminal Station may be utilized to supply the Stephenville area via the 66 kV network, primarily through transmission line 400L (Bottom Brook – Wheelers) and transmission line 404L (Wheelers – Wheelers Tap).

As per the Infeed Load Forecast provided in Section 3, the supply of Stephenville power via BBK T2 and transmission line 400L does not provide full back up for the area load. While the 66kV network consists

[1] The retirement of the Stephenville Gas Turbine will also impact the capacity of the Island Interconnected System. Capacity considerations are being assessed as part of Hydro's ongoing Reliability and Resource Adequacy Study, which is currently before the Board of Commissioners of Public Utilities.

of transmission lines with capacities capable of meeting full load,[2] power transformer T2 at Bottom Brook only has a capacity of 15/20/25 MVA. As a result of this bottleneck, supply for Stephenville area through the 66 kV network is limited to less than 25 MW.

A reliability analysis of the impact of the proposed retirement of the Stephenville Gas Turbine to customers in the Stephenville area is provided in Section 4.

Section 5 includes a description of terminal station upgrades that would be required for a full backup to ensure that there would be no loss of load for customers in the Stephenville area.

[2] Transmission line 400L has a continuous summer rating of 76.4 MVA and a continuous winter rating of 102.5 MVA. Transmission line 404L has a continuous summer rating of 73.1 MVA and a continuous winter rating 91.1 MVA.

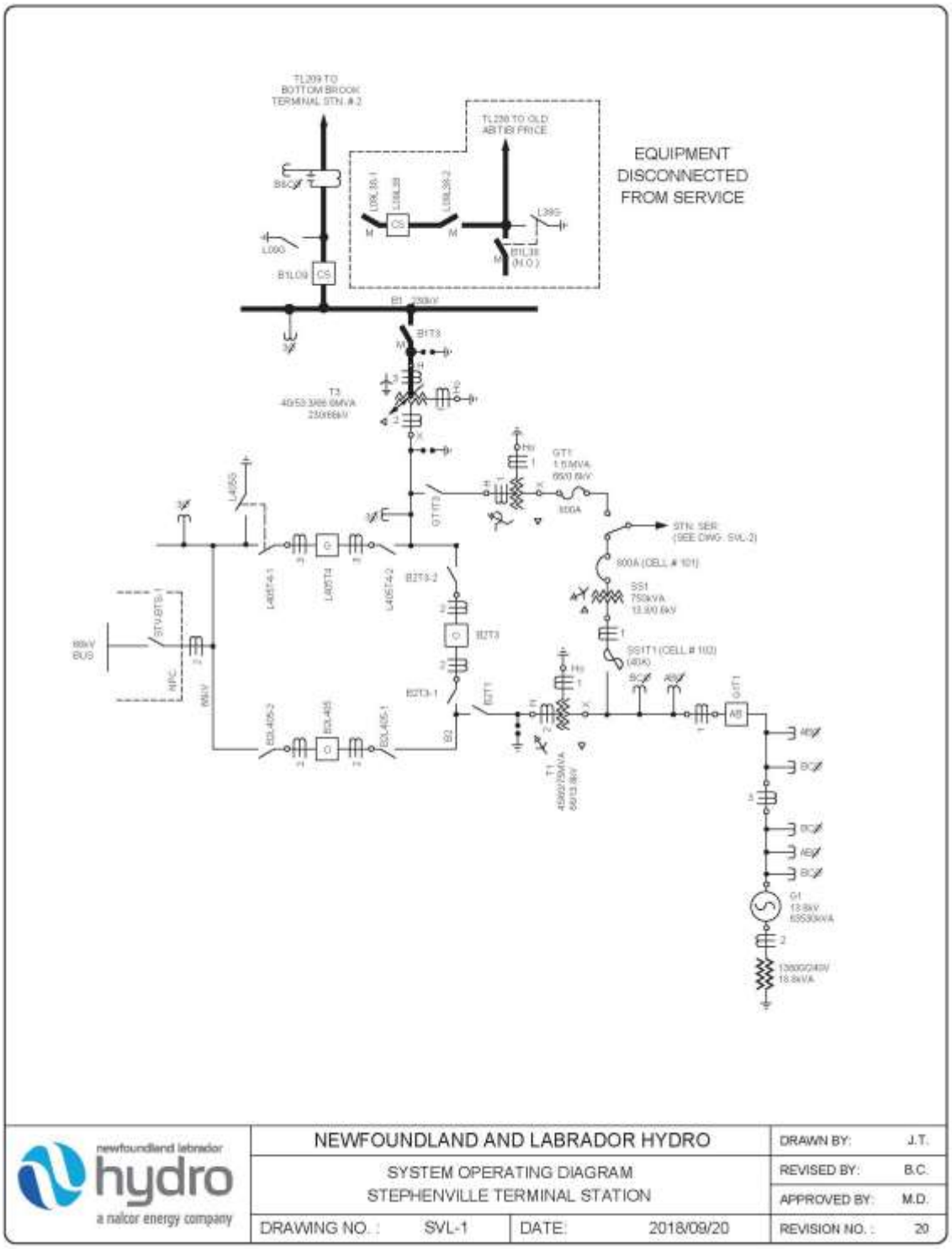

Figure 1 – Single Line Diagram of Stephenville Terminal Station

3 Infeed Load Forecast

The Infeed Load Forecast[3] for the Stephenville area is summarized in Table 1.

Table 1
Newfoundland Power Infeed Load Forecast
Stephenville 66 kV

Year	MW
2020	51.4
2021	51.3
2022	51.2
2023	51.4
2024	51.6
2025	51.7

4 Reliability Analysis of Existing Stephenville Supply

4.1 Consideration of Transmission Planning Criteria

In the context of Transmission Planning Criteria, the 230 kV network within the Island Interconnected System is considered to be part of the primary transmission system. Transmission Planning Criteria are therefore applied to ensure that no single system events shall result in the interruption of load or firm imports or export commitments. Without the Stephenville Gas Turbine in service, the loss of transmission line TL209 would result in a customer impact. This scenario therefore represents a violation to Transmission Planning Criteria.

Transmission line TL209 is a radial spur of the 230 kV network and only supplies Newfoundland Power's customers. In addition, the 230 kV voltage rating of transmission line TL209 may be considered as a legacy of the supply requirements for Abitibi mill loads that were formerly connected in the area. On this basis, it may be argued that transmission line TL209 should not be part of the primary transmission system and that Transmission Planning Criteria need not be strictly applied.

[3] Newfoundland Power Infeed Load Forecast, October 25, 2019.

However, consideration should be given to the underlying 66 kV network in the area. This network may be served from either Stephenville or Bottom Brook Terminal Stations. Such a configuration closely resembles other looped networks within the Island transmission system such as the Hardwoods – Oxen Pond 66 kV Loop, the Holyrood - Western Avalon 138 kV Loop and the Stony Brook - Sunnyside 138 kV Loop. In all of these cases, Newfoundland Power loads may be supplied from either terminal station and there is a requirement to ensure that there is no loss of load in the event of a transformer outage.

When the Stephenville Gas Turbine is removed from service, the Stephenville-Bottom Brook loop would become the only such system where there would be an exposure for unserved load in the event of a transformer or transmission outage.

For consistency, an exposure for unserved energy resulting from a transformer or transmission line outage in the Stephenville-Bottom Brook loop would have to be considered a violation to Transmission Planning Criteria. To determine whether such an approach is justified, the risk of unserved energy is calculated in a probabilistic reliability analysis and is presented in Section 4.2.

4.2 Probabilistic Reliability Analysis

A probabilistic reliability analysis was performed to assess the customer impact that would result from the outages presented in Section 4.1.

Hydro completed reliability analysis on a simplified component model of the existing Stephenville 230/66 kV system with supply from Bottom Brook 230 kV Terminal Station as outlined in Figure 2 below. This model consists of transmission line, transformer and circuit breakers. For this analysis, the Canadian Electricity Association's ("CEA") "2017 Annual Report – Forced Outage Performance of Transmission Equipment" data was used for three component types.[4]

[4] CEA's 2017 Annual Report is based on data for the period January 1, 2013 to December 31, 2017.

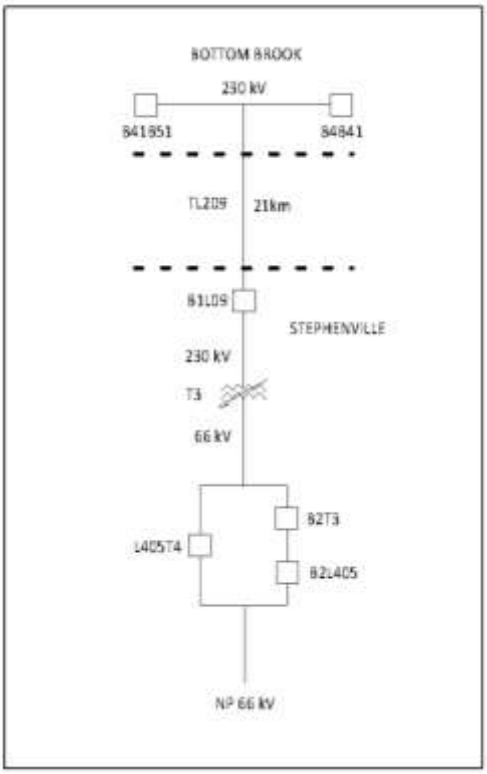

Figure 2 – Simplified Stephenville Supply Model

Table 2 includes CEA transmission line statistics for line-related sustained forced outages for 230kV transmission lines. Table 3 includes CEA transformer bank and circuit breaker statistics for forced outages involving integral subcomponents and terminal equipment.

Table 2 - Transmission Line Sustained Forced Outage Statistics

Voltage Classification (kV)	Sustained Outage Frequency (Per 100 km.a)	Frequency of 21km (f)	Mean Duration (hr)	Mean Duration Year (r)	Unavailability U (f x r)
230	0.3421	0.072	25.6	0.00292	0.000211

Table 3 - Transformer and Circuit Breaker Forced Outage Statistics Involving Integral Subcomponents and Terminal Equipment

Component	Sustained Outage Frequency Per Year (f)	Mean Duration (hr)	Mean Duration Year (r)	Unavailability U (f x r)
TRF 230kV	0.1356	222.2	0.02537	0.00344
CB 230kV	0.1370	288.4	0.03292	0.00451
CB 66kV	0.0547	981.8	0.11208	0.006131

For each component in a system, the Unavailability (U) is calculated as per the following equation:

$$\text{Unavailability (U)} = f \times r$$

where:

f = outage frequency (occurrences per year), and

r = mean time to repair (years)

For reliability evaluation, components are said to be in series if only one needs to fail for the network failure. Components are said to be in parallel if they must all fail for the network failure.

For a series network comprising of two repairable components, 1 and 2, the unavailability of the system is mathematically described as follows:

$$U_{se} = U_1 + U_2 - U_1U_2$$

For a parallel network comprising of two repairable components, 1 and 2, the unavailability of the system is mathematically described as follows:

$$U_{pa} = U_1U_2$$

4.2.1 Unavailability Calculation of Stephenville Supply

Unavailability of supply of power to the Newfoundland Power 66kV bus at Stephenville is calculated using the series and parallel formulas outlined above in relation to the simplified single line diagram model of Figure 2 while using the unavailability numbers in Tables 1 and 2. Accordingly, the overall unavailability of supply to Stephenville from Bottom Brook has been calculated to be 0.003745 or 0.3745%.

4.2.2 Expected Unserved Energy (EUE) Using 2019 Load Profile

Figure 3 below shows the hourly 2019 Load Profile of Stephenville along with the 25 MW backup supply option that is provided through transformer T2 at Bottom Brook via transmission line 400L. The exposure for unserved energy exists for the period ranging from September to April.

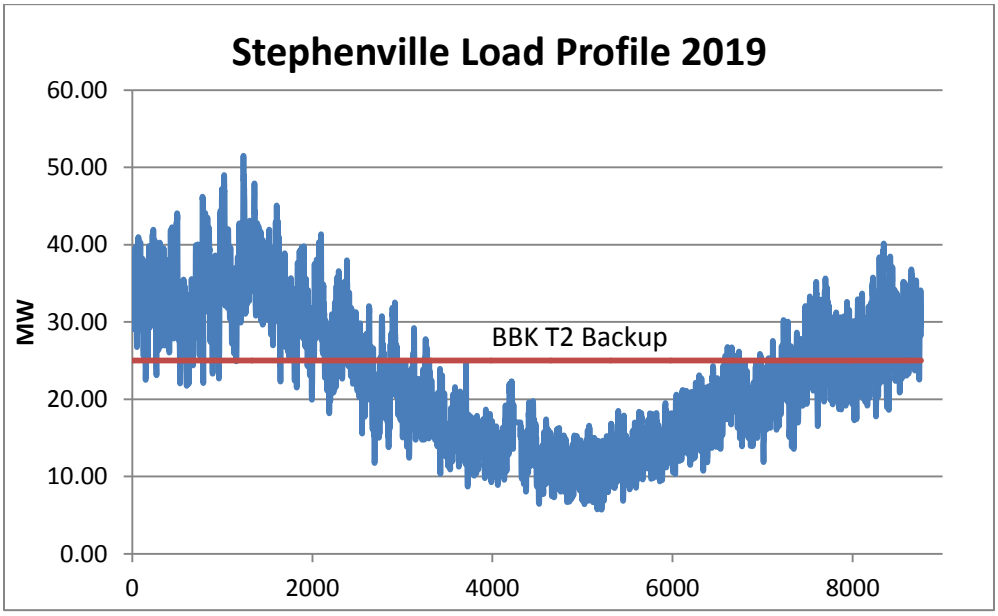

Figure 3 – 2019 Stephenville Load Profile showing 25MW BBK Backup Feed

To calculate the EUE at Stephenville for loss of 230kV supply from transmission line TL209, the hourly load profile was used to determine the hourly deficit that would remain once supply was lost via Bottom Brook transmission line TL209 feed with a backup limitation of 25 MW through Bottom Brook transformer T2 and transmission line 400L. This deficit was multiplied by the overall unavailability number of 0.3745% to arrive at an overall EUE of approximately 94 MWh.

An example of this customer impact would be a case where there is an outage to transmission line TL209 over peak and only 25 MW of the ~51.4 MW of customer load would be supplied. A 94 MWh interruption would equate to an outage of approximately 3.5 hours for the remaining 26.4 MW of customer load. With an assumed average peak load of approximately 6 kW per customer, this interruption would affect 4,400 customers.

Consideration may also be given to a worst-case scenario involving the failure of power transformer SVL T3 over peak. In such a case the spare 230/66 kV power transformer from Hardwoods Terminal Station would be relocated to SVL in an emergency situation. Such an operation would take multiple weeks and likely up to one month to complete. With capacity for customers in the Stephenville area limited to 25 MW for the peak month, expected unserved energy in such a scenario would exceed 8,000 MWh. An exposure of this magnitude is deemed to be unacceptable.

5 Proposed Terminal Station Upgrades

To ensure that there would be no customer outages as described in the Section 4.4.2, terminal station upgrades would be required at Stephenville and Bottom Brook. These upgrades would include the addition of a power transformer at Bottom Brook, grounding system modifications at Bottom Brook and Stephenville, and the implementation of a more efficient terminal station configuration at Stephenville.

5.1 Power Transformer Addition at BBK

At present, Hydro has a 230/66 kV, 40/53.3/66.7 MVA power transformers in inventory as a result of the transformer capacity addition in the Hardwoods – Oxen Pond 66 kV loop. Adding a 230/66 kV, 40/53.3/66.7 MVA transformer at Bottom Brook with a connection to Newfoundland Power 66 kV transmission line 400L would provide adequate capacity to supply the Stephenville area for an outage to either SVL T1 or 230 kV transmission line TL209.

5.2 Grounding System Modifications at Bottom Brook

The 230/66 kV transformer has a WYE-GND high voltage winding configuration and a DELTA low voltage winding configuration. To ensure proper 66 kV system grounding at Bottom Brook TS1, it is proposed that the existing 138/66 kV transformer remain connected to the 66 kV bus to provide the 66 kV ground point. T2 would be renamed GT1 and the 138 kV disconnect switch B2T2 would be removed to avoid accidental paralleling of the 230 kV and 138 kV buses at Bottom Brook through the 66 kV. Figure 4 includes a single line diagram of the changes required at BBK TS1.

5.3 Grounding System Modifications at Stephenville

At present, there are two station service supplies for the Stephenville Terminal Station. The first supply comes from the grounding transformer GT1 which also provides a ground source for the underlying 66 kV system. The second source comes from SS1 which is connected to the low voltage side of the gas turbine step up transformer T1.

It is a requirement of the Newfoundland and Labrador System Operator ("NLSO") that 230 kV terminal stations have two sources of station service. Once the gas turbine has been removed, the second station service feed would be through T1 and SS1.

However, T1 is a relatively large unit (45 MVA base) to provide service loading in a backup capacity. Assuming the transformer would stay energized in this backup role, the no load losses of this transformer would accumulate approximately 377 MWh per year which has an estimated present worth of approximately $474,000.[5] In addition, T1 is presently 45 years old and requires bushing replacements. The reliability of this station service feed is reduced by the fact that two transformers would be connected in series, thus increasing the probability of loss of service by the failure of either unit.

A lowest cost, reliable alternative would be to replace both T1 and SS1 with a new 1.5 MVA station service transformer, similar to GT1. This transformer would act both as the second station service feed and also as the second grounding source for the 66kV.

5.4 Terminal Station Configuration Efficiencies at Stephenville

Stephenville Terminal Station currently includes a 66kV ring bus arrangement to provided flexibility of supply to the 66kV network from the two sources of supply that include transmission line TL209 and the Stephenville Gas Turbine. With the removal of the gas turbine, this ring bus is no longer required. Further, two of the circuit breakers in this ring are scheduled for replacement by 2022.[6] With the elimination of the ring bus, these capital expenditures would be avoided.

[5] Calculations are based on a marginal cost assumption ranging from $36 to $63 per MWh.

[6] 230 kV circuit breakers B2L405 and B2T3 are due for replacement.

Figure 5 includes an illustration of the equipment to be removed at Stephenville Terminal Station. Figure 6 is an illustration of the recommended final configuration of this terminal station.

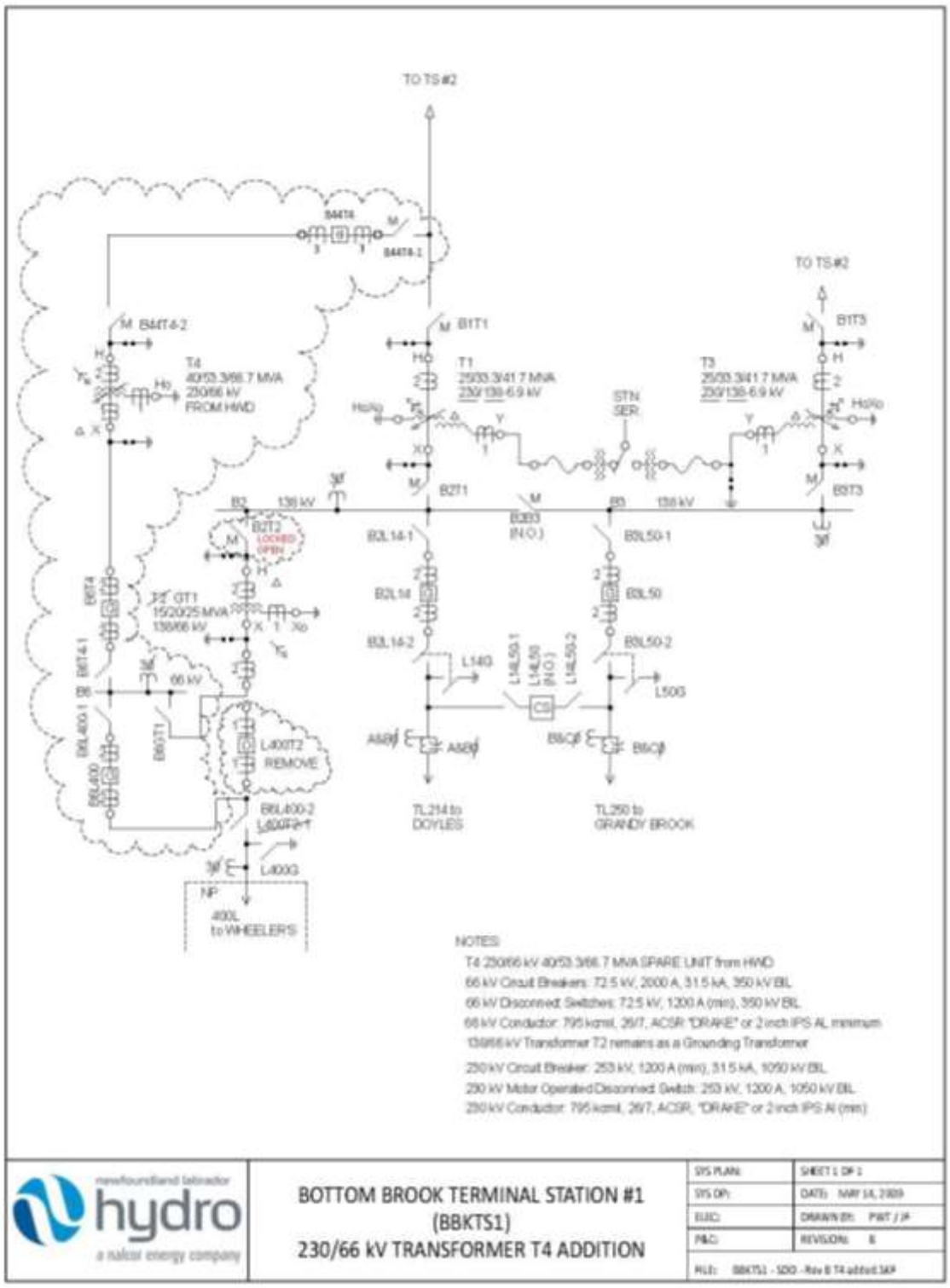

Figure 4 – Bottom Brook TS1 Additions Given Removal of Stephenville Gas Turbine

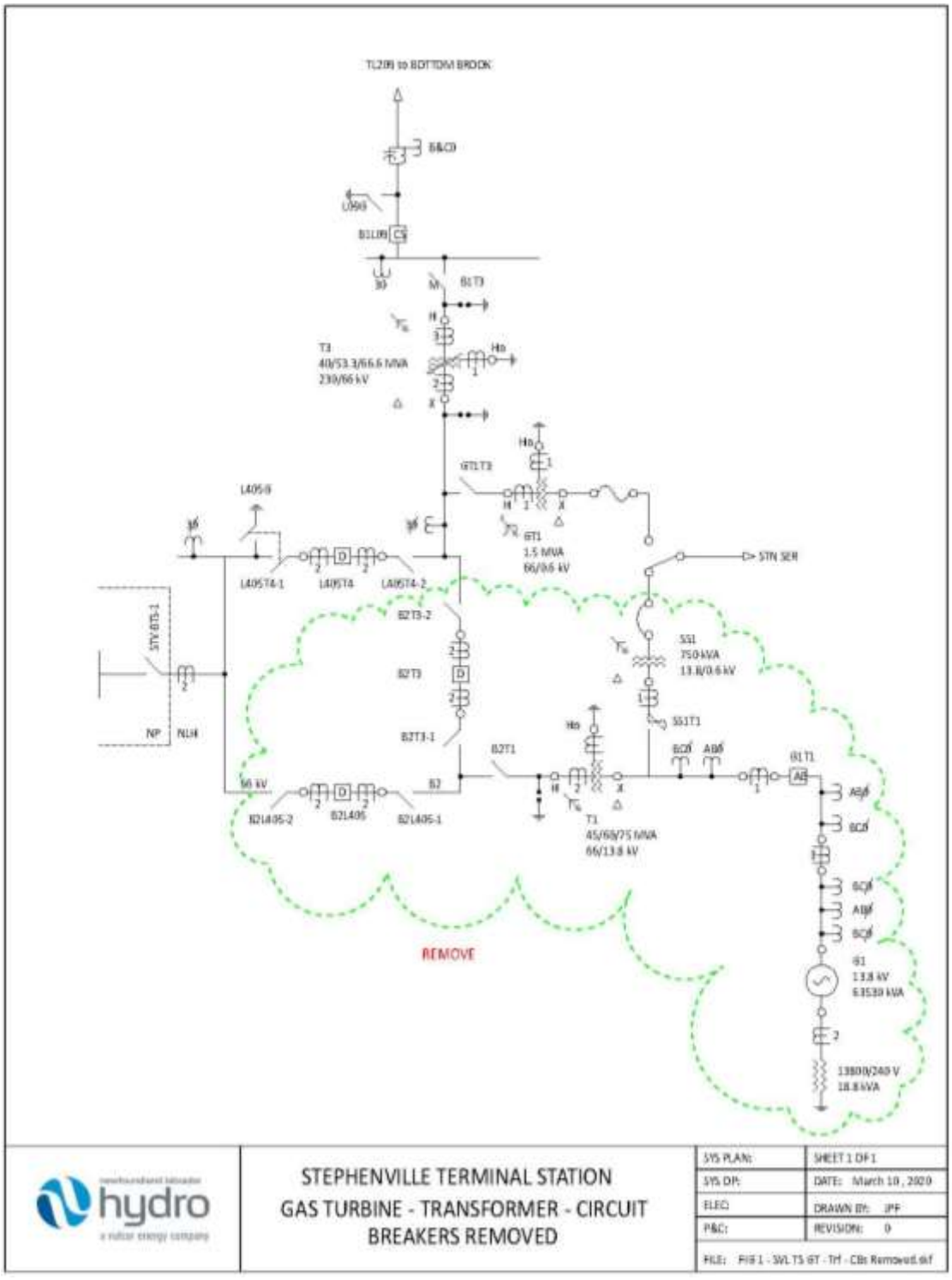

Figure 5 – Stephenville Gas Turbine Equipment Removals

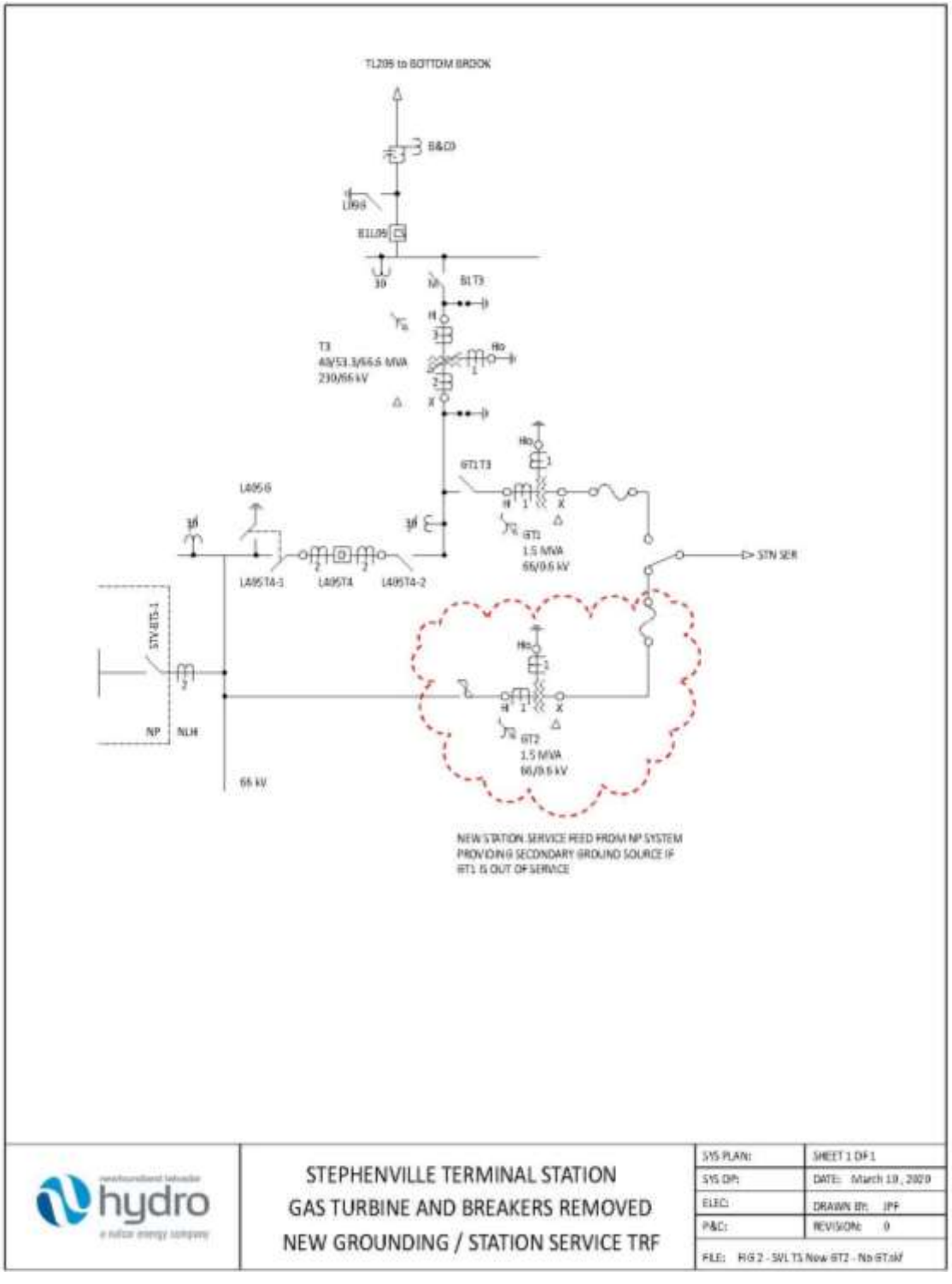

Figure 6 – Stephenville Terminal Station with New Station Service Transformer

6 Conclusions and Recommendations

The following conclusions are made with respect to the transmission system impacts that would result from retirement of the Stephenville Gas Turbine.

- Stephenville Gas Turbine is currently available to be placed in operation in generate mode in the event of outages to 230 kV transmission line TL209 and Stephenville power transformer T1.
- An alternative source of supply for customers in the Stephenville area is supply via the 138/66 kV transformer, T2, at Bottom Brook and 66 kV transmission line 400L. This supply is limited to 25 MW and is not adequate to meet peak load, which is forecasted to exceed 51 MW.
- When the Stephenville Gas Turbine is removed from service, customers in the Stephenville – Bottom Brook loop would be the only customers within a looped network in the Island transmission system with an exposure for unserved energy resulting from a transformer or transmission line outage. In all other looped network, such an exposure would be considered a violation to Transmission Planning Criteria.
- The expected unserved energy associated with this violation is approximately 94 MWh. An example of the customer impact associated with such an outage would be a 3.5-hour interruption for approximately 4,400 customers.
- Worst-case outages would involve the failure of Stephenville power transformer T3 over peak. Such an outage could extend for a duration of up to one month and would result in unserved energy exceeding 8,000 MWh. This represents an unacceptable risk to customer supply.

On the basis of these conclusions, it is recommended that the reliability of supply be consistent for all customers in looped networks in the Island transmission system. The exposure for unserved energy resulting from a transformer or transmission line outage in the Stephenville-Bottom Brook loop is unacceptable and should be considered to be a violation to Transmission Planning Criteria. The terminal station upgrades described in the report should therefore be implemented at Stephenville and Bottom Brook.

Document Summary

Document Owner:	Transmission Planning
Document Distribution:	Public

Revision History

Revision	Prepared by	Reason for change	Effective Date
1	J. Flynn	Initial Release	2020-04-27
2	J. Flynn	Modification to BBK TS design	2020-05-15
3	J. Flynn	Recommended terminology changes request from Regulatory	2020-07-20

Document Control

Regarding NLSO documents: The electronic version of this document is the CONTROLLED version. Please check the NLSO Document Management System SharePoint site for the official copy of this document. This document, when downloaded or printed, becomes UNCONTROLLED.

15. Overhaul Diesel Units - Various (2021)



2021 Capital Budget Application

Overhaul Diesel Units
Various (2021)

July 2020

A report to the Board of Commissioners of Public Utilities

newfoundland labrador hydro
a nalcor energy company

Executive Summary

To support the continued safe and reliable operation of diesel units, Newfoundland and Labrador Hydro ("Hydro") is proposing the overhaul of six diesel engines and one alternator in 2021 utilizing a usage-based schedule.

Hydro has 23 diesel generating stations, 19 of which are the sole source of power to the community. The two main components of a diesel unit overhaul include the engine and alternator. Diesel engines are overhauled or replaced, depending on cost, approximately four times during the life of the diesel generation unit ("genset"), while the alternator is overhauled once during the life of the genset. The interval for performing overhauls on 1,200 rpm units was updated in 2020 and will remain the same for 2021. Units that operate at 1,200 rpm are overhauled at a frequency of 30,000 operating hours[1] and 1800 rpm units are overhauled at 20,000 hours. Overhauls are required to ensure each engine is able to meet its expected life of 120,000 hours for 1,200 rpm units and 100,000 for 1,800 rpm units.

The budget estimate for this project is $1,232,900. Hydro forecasts 35 engine overhauls over the 2021 to 2025 period.

[1] 1,200 rpm unit overhaul interval increased from 20,000 to 30,000 hours as described in the "2020 Capital Budget Application" Overhaul Diesel Units - Various report.

Contents

Executive Summary i
1.0 Introduction 1
2.0 Background 1
2.1 Existing System 2
2.2 Units in Current Plan for 2021 2
2.3 Operating Experience 3
3.0 Justification 3
4.0 Analysis 4
4.1 Identification of Alternatives 4
4.2 Evaluation of Alternatives 4
4.2.1 Deferral 4
4.2.2 Complete Overhauls 4
4.2.3 Recommended Alternative 4
4.3 Replacement versus Overhaul 4
5.0 Project Description 5
6.0 Conclusion 6

List of Appendices

Appendix A: Diesel Engine Overhaul Five-Year Plan

1.0 Introduction

Hydro has 23 diesel generating stations. Nineteen of these diesel generating stations are isolated and the sole source of power to the community, serving a total of approximately 4,400 customers. The number of gensets at each generating station ranges from three to six and the rated output of the units ranges from 40 kW to 2,500 kW. The gensets across the system range in age from less than one year to 52 years, and currently range in operating hours from 535 to over 126,000.[2]

The gensets proposed for overhaul within this report are anticipated to reach or exceed, in 2021, the number of operating hours for recommended overhauls based on the rotational speed of the unit. All of Hydro's gensets operate at either 1,200 or 1,800 rpm.

2.0 Background

A diesel genset is the combination of a diesel engine with an electric alternator[3] used to generate electrical energy as shown in Figure 1. Gensets can be classified in one of three ways, depending on their mode of operation:

1) Continuous;
2) Prime; and
3) Standby/Emergency.

Continuous and prime gensets are very similar as they function as the main source of power and are designed to operate continuously or for extended periods of time. The major difference between the two is that continuous gensets are designed to operate continually with a consistent load while prime gensets are designed to operate for long durations at variable load. Standby/emergency gensets are to be run only when there is an outage or in a backup situation. For Hydro, prime power gensets are the class purchased based on the mode of operation for use in its isolated locations.

[2] As of March 31, 2020.
[3] An alternator is an electric generator that converts mechanical energy to electrical energy in the form of alternating current.

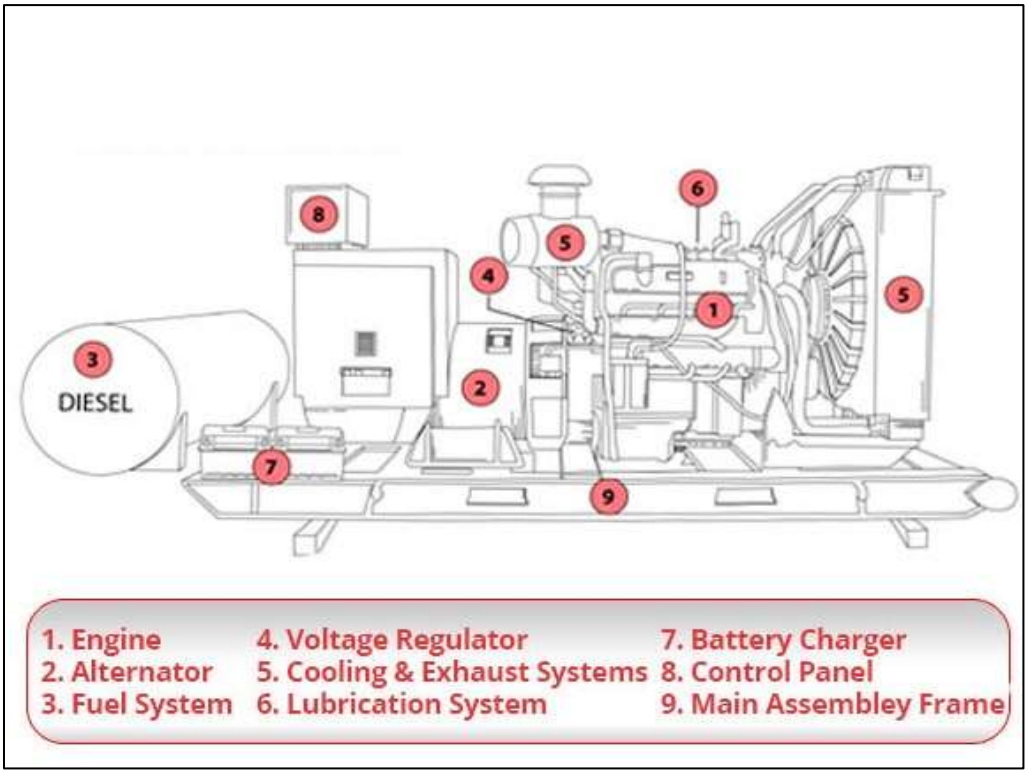

Figure 1: Diesel Genset

2.1 Existing System

Hydro's prime power gensets are overhauled based on the rotational speed of the unit. Units that operate at 1,800 rpm are overhauled after 20,000 hours of service and units that operate at 1,200 rpm are overhauled after 30,000 hours. For both 1,200 and 1,800 rpm units the alternators are overhauled once in the lifetime of the genset usually taking place after 40,000–60,000 hours of operation.

2.2 Units in Current Plan for 2021

Six diesel engines and one alternator for Rigolet, Unit 2081, are projected to reach or exceed their overhaul timing in 2021. The planned overhauls are listed in Table 1.

Table 1: 2021 Planned Overhauls

Genset Location and Unit Number	Engine Rating (kW)	Engine Speed (rpm)	Alternator Rating[4] (kW)	Age (Years)	Year of Last Overhaul
Grey River 2067	232	1,800	136	18	2017
Black Tickle 582	300	1,800	300	11	2017
Mary's Harbor 2090	815	1,800	725	7	New
Cartwright 2086	689	1,800	600	11	2015
Rigolet 2081[5]	529	1,800	455	14	2017
Hopedale 2054	475	1,200	650	21	2012

2.3 Operating Experience

All the units identified in Table 1 are operational with most in regular daily service. Hydro maintains an engine overhaul program based on operating hours to maximize the life of its gensets.

3.0 Justification

This project is required to maintain reliable operation of the diesel engines and alternators. Diesel generating stations are isolated and in most cases are the sole source of power to the community. Hydro has maintained overhauls at 20,000 operating hours for 1,800 rpm engines based on the reliable performance and the condition of parts during overhauls, and has moved to 30,000 operating hours for 1,200 rpm engines. Hydro will assess the impact of the change in overhaul interval for 1,200 rpm engines based on performance and the condition of the engines when overhauled before adjusting the timing further, and maintains that the overhaul timing is necessary to ensure reliable service. To defer or skip an overhaul would increase the risk of an engine or generator failure resulting in reduced reliability of the generating station.

[4] The Alternator Rating is also the rating for the unit, unless the engine rating is smaller.
[5] Both the engine and alternator for Rigolet 2081 are planned for overhaul.

4.0 Analysis

4.1 Identification of Alternatives

Hydro has evaluated the following alternatives:

- Defer overhauls to a future year; and
- Complete overhauls as planned.

4.2 Evaluation of Alternatives

4.2.1 Deferral

This alternative involves further extension of operating hours prior to the completion of overhauls in a later year, thereby exceeding Hydro's established and accepted criteria for engine overhauls. This could increase the likelihood of engine failure and reduced reliability and is not recommended.

4.2.2 Complete Overhauls

Complete the planned overhauls to maintain safe and reliable operation of Hydro's diesel generating stations and gather overhaul data.

4.2.3 Recommended Alternative

Hydro recommends completing the planned overhauls to maintain reliable operation of its diesel generating facilities. With recently implemented changes to the frequency of overhauls, Hydro must stay committed to completing the overhauls as planned to gather the information required to evaluate the outcomes of the changes. When both replacement and overhaul options are possible, Hydro will select the least-cost option during execution of the project.

4.3 Replacement versus Overhaul

During the 2018 overhauls it was realized that the cost of overhaul parts had significantly increased, but were subject to fluctuation. Based upon this information Hydro has determined that in some cases it may be cost comparable to replace the engine with a new one instead of overhauling it. New engines are also covered by a manufacturer's warranty. In these cases the engine must be available with acceptable delivery timing. While there are no alternatives to executing the project on an engine that has reached the timing for intervention, when both options are possible and available, Hydro will select the least-cost option during execution of the project.

Overhauls performed on alternators by a third party, Siemens, have no alternative. The alternators are cleaned and rewound if necessary.

5.0 Project Description

Occasionally, a unit in one of the diesel plants across Hydro's operating area experiences an issue that necessitates an unplanned overhaul, or reaches the number of operating hours earlier than anticipated. Where appropriate, Hydro may complete such an overhaul under this project and if possible, defer the completion of one of the planned units.

The 2021 Overhaul Diesel Units project includes the planned overhaul of the following diesel engines:

- Grey River 2067;Black Tickle 582;
- Mary's Harbor 2090;
- Cartwright 2086;
- Rigolet 2081; and
- Hopedale 2054.

As the cost of parts may fluctuate, in early 2021 Hydro will determine the cost of the overhaul parts and replacement engines and select the least cost option with acceptable delivery. If an overhaul occurs it will include replacement or refurbishment of such items as pistons, liners, main bearings, connecting rod bearings, fuel injectors, oil cooler, turbo charger, water pump, oil pump, cylinder heads, fuel lines, fuel pumps, and gaskets. In addition, Rigolet 2081 will have its alternator overhauled.

The project estimate is shown in Table 2.

Table 2: Project Estimate ($000)

Project Cost	2021	2022	Beyond	Total
Material Supply	790.0	0.0	0.0	**790.0**
Labour	211.8	0.0	0.0	**211.8**
Consultant	0.0	0.0	0.0	**0.0**
Contract Work	10.0	0.0	0.0	**10.0**
Other Direct Costs	65.0	0.0	0.0	**65.0**
Interest and Escalation	48.4	0.0	0.0	**48.4**
Contingency	107.7	0.0	0.0	**107.7**
Total	**1,232.9**	**0.0**	**0.0**	**1,232.9**

The anticipated project schedule is shown in Table 3.

Table 3: Project Schedule

Activity	Start Date	End Date
Planning:		
Schedule annual overhauls	February 2021	September 2021
Procurement:		
Purchase overhaul components	March 2021	October 2021
Installation:		
Complete overhaul	April 2021	November 2021
Commissioning:		
Testing after overhaul	April 2021	November 2021
Closeout:		
Release for service and asset assignment	December 2021	December 2021

6.0 Conclusion

To support the continued safe and reliable operation of Hydro's diesel units, Hydro is proposing the overhaul of six diesel engines and one alternator in 2021. Hydro completes overhauls on 1,200 rpm engines after 30,000 hours of operation with replacement after 120,000 hours. Engines that operate at 1,800 rpm are overhauled after 20,000 hours with replacement after 100,000 hours. Hydro has determined, based upon the cost of replacement parts, installation, and travel that it may be cost effective to replace an engine instead of overhauling it, if a replacement engine is available with acceptable delivery. As the cost of parts can fluctuate, Hydro will execute the least-cost alternative for each of the engine overhauls.

Appendix A

Diesel Engine Overhaul Five-Year Plan

newfoundland labrador hydro
a nalcor energy company

Table A-1: Diesel Engine Overhaul Five-Year Plan

2021	
Grey River 2067	2021
Black Tickle 582	2021
Mary's Harbor 2090	2021
Cartwright 2086	2021
Rigolet 2081	2021
Hopedale 2054	2021
2022	
Francois 588	2022
L'Anse-au-Loup 2012	2022
Norman Bay 581	2022
St. Brendan's 2055	2022
Cartwright 2045	2022
Mary's Harbour 2093	2022
Nain 2085	2022
Paradise River 585	2022
2023	
Nain 591	2023
Postville 2084	2023
Paradise River 324	2023
Charlottetown 2088	2023
Port Hope Simpson 2073	2023
2024	
Francois 587	2024
St. Lewis 2080	2024
McCallum 589	2024
Rigolet 2065	2024
2025	
Port Hope Simpson 2099	2025
McCallum 2064	2025
Black Tickle 579	2025
Hopedale 2074	2025
Paradise River 2094	2025
Postville 2096	2025
Rigolet 2081	2025

16. Additions for Load -
Wabush Substation Upgrades

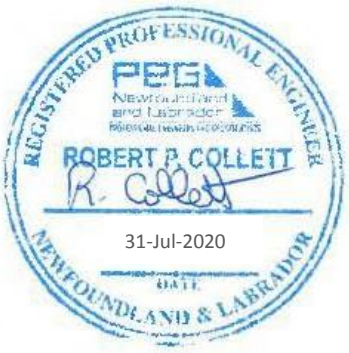

2021 Capital Budget Application

Additions for Load - Wabush Substation Upgrades

July 2020

A report to the Board of Commissioners of Public Utilities

newfoundland labrador hydro
a nalcor energy company

Executive Summary

The Wabush Substation provides power to the town of Wabush. Load forecasts indicate that this substation requires upgrades to ensure it has the capacity to meet the forecasted peak loads. These upgrades will also improve the reliability of this substation. These upgrades include the addition of transformer capacity, the installation of breakers and other electrical equipment, the installation of a Supervisor Control and Data Acquisition ("SCADA") system, replacement of the control building, and distribution system upgrades. This project is required to support the reliable supply of power to Newfoundland and Labrador Hydro's ("Hydro") customers that are served by the Wabush Substation.

This report summarizes the analysis completed to assess the transformation capacity at the Wabush Substation, and details the upgrades and improvements recommended to meet the forecasted load for this station. The analysis is based on a forecasted load growth period of 25 years, from 2020–2021 to 2045–2046.

This project is estimated to cost approximately $10,493,400 and is scheduled to take three years to complete (2021–2023).

Contents

Executive Summary i
1.0 Introduction 1
2.0 Background 2
2.1 Existing System 2
2.2 Operating Experience 3
3.0 Justification 3
4.0 Analysis 4
4.1 Identification of Alternatives 4
4.2 Evaluation of Alternatives 4
4.2.1 Alternative 1: Wabush Substation Upgrade - Three Transformer Configuration 4
4.2.2 Alternative 2: Wabush Terminal Station Addition of 12.5 kV Bus 4
4.2.3 Alternative 3: Flora Lake Terminal Station 5
4.2.4 Alternative 4: Wabush Substation Upgrade - Two Transformer Configuration 5
4.2.5 Alternative 5: Defer 5
4.3 Recommended Alternative 6
5.0 Project Description 6
6.0 Conclusion 8

List of Attachments

Attachment 1: Labrador West 46 kV System Expansion Wabush Substation Recommended Upgrade

1.0 Introduction

The electrical infrastructure that is used to supply Labrador City and Wabush is owned, operated, and maintained by Hydro. The towns of Wabush and Labrador City are located in western Labrador near the Quebec border and have populations of approximately 1,900 and 8,600 people, respectively.

Figure 1 is a map of Labrador showing the geographical location of the towns and some of the major electrical infrastructure in Labrador.



Figure 1: Labrador Electrical System

Details related to the proposed Labrador West 46 kV system expansion are included in Attachment 1 to this report.

2.0 Background

2.1 Existing System

The Wabush system supplies electrical power to the customers in the Town of Wabush. The system consists of:

- A 46 kV transmission line, L36;
- A distribution substation ("Wabush Substation"); and
- Six 12.5 kV distribution feeders (L3, L7, L9, L11, L12, and L13).

The Wabush Terminal Station is supplied by two 230 kV transmission lines from Churchill Falls. The Wabush Terminal Station steps down the voltage from 230 kV to 46 kV, which is then distributed to Labrador City, Iron Ore Company of Canada, Wabush Mines (operated by Tacora Ltd.) and the Wabush Substation. The Wabush Substation steps the voltage down to 12.5 kV, which is then distributed to the Town of Wabush. Figure 2 is a block diagram showing the configuration of the Labrador West Interconnected System.

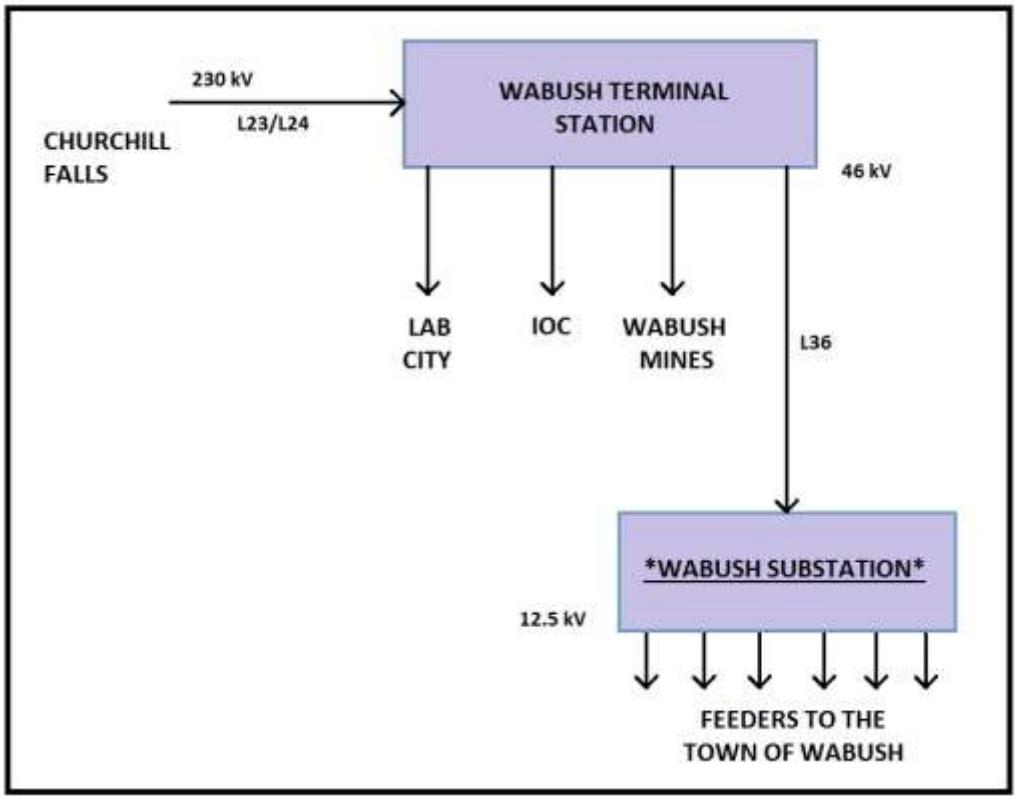

Figure 2: Labrador West Interconnected System

2.2 Operating Experience

Operating experience of these assets is not applicable to the justification of this project as it is required for current and future reliability in western Labrador.

3.0 Justification

The substation has a total installed capacity (at 25°C ambient) of 37.3 MVA. The firm transformation capacity[1] of the substation is 20.6 MVA. Load forecasts indicate that the peak demand for the Wabush Substation is expected to reach 22.3 MW by the winter of 2021. The substation's firm capacity has already been exceeded by approximately 10% and load forecasts predict that peak loads will increase. There is therefore a violation to Transmission Planning Criteria as there is insufficient power transformer capacity to meet peak load Additional details of the load forecast are provided in Section 2.2 of Attachment 1.

If a transformer at the Wabush Substation were to fail under peak load conditions, there would be serious impacts to the customers supplied from this substation. If the failure occurred during the winter peak load, the installation of a spare transformer (T5) would be hampered due to the cold temperatures experienced in this area. The installation of the spare would still leave the station with a deficit of capacity. For the coming winter of 2021–2022 the load forecast is expected to be 23.4 MVA. The capacity deficit would be 2.8 MVA. Peak loading under these conditions would likely require rotating customer outages.

The replacement of a failed transformer is a lengthy process, which generally requires 12–24 months from the time the project is sanctioned.

In addition to the concerns with the transformer capacity, this substation lacks the modern protection equipment used to permit the isolation of electrical faults. Therefore, customers on multiple feeders would be affected by faults within the station. This substation also lacks the modern communication equipment used to provide detailed real time loading and the status of equipment throughout the station. This information assists with trouble shooting and investigations of issues when anomalies occur.

[1] Firm transformation capacity is the total station capacity less the transformer with the largest rating.

4.0 Analysis

4.1 Identification of Alternatives

Hydro evaluated a number of alternatives to address the issues in the Wabush Substation. A cost benefit analysis was performed as part of the "Labrador West 46 kV System Expansion – Wabush Substation Upgrade Alternatives."[2] study. The Wabush Substation Upgrade – 3 Transformer Configuration alternative was selected as the least-cost solution to meet the baseline load forecast.

- Alternative 1: Wabush Substation Upgrade - Three Transformer Configuration;
- Alternative 2: Wabush Terminal Station Addition of 12.5 kV Bus;
- Alternative 3: Flora Lake Terminal Station Addition of 12.5 kV Bus;
- Alternative 4: Wabush Substation Upgrade - 2 Transformer Configuration; and
- Alternative 5: Defer.

4.2 Evaluation of Alternatives

4.2.1 Alternative 1: Wabush Substation Upgrade - Three Transformer Configuration

Under this alternative one new 20/26.7 MVA transformer (designated as T7) will be installed. The existing transformers T6 (10/13.3/16.7 MVA) and T4 (5/6.6/8.3) will remain in service. The installation of T7 will address transformer capacity concerns. Work would also include the installation of associated breakers and other electrical equipment as required to address protection and communication deficiencies. This alternative is slightly modified from the alternative reviewed in the "Labrador West 46 kV System Expansion – Wabush Substation Upgrade Alternatives" study. New load forecasts indicate that the size of the new transformer should be increased from 25 MVA to 26.7 MVA. This modification does not change the results of the cost-benefit analysis.

4.2.2 Alternative 2: Wabush Terminal Station Addition of 12.5 kV Bus

This alternative consists of the installation of two, 46/12.5 kV transformers, the construction of a 12.5 kV bus within the Wabush Terminal Station, the installation of associated breakers and other electrical equipment, and work on the 12.5 kV distribution system including a new 12.5 kV distribution line. The

[2] "Labrador Interconnected System Transmission Expansion Study," Newfoundland and Labrador Hydro, April 3, 2019, rev 2 (originally filed October 31, 2018), app C.

estimate for this alternative is approximately $11.3 million and was rejected as not being the least-cost alternative.

4.2.3 Alternative 3: Flora Lake Terminal Station

This alternative consists of the construction of a new station which would include a 12.5 kV bus. The 12.5 kV bus would be used to offload some of the load from the Wabush Substation. Work would also include the installation of associated breakers and other electrical equipment, work on the 12.5 kV distribution system, and two new 12.5 kV distribution lines. The estimate for this alternative is approximately $12.2 million and was rejected as not being the least-cost alternative.

4.2.4 Alternative 4: Wabush Substation Upgrade - Two Transformer Configuration

This alternative consists of the replacement of the transformers within the Wabush Substation with two new 20/26.6/33.25 MVA transformers. Work would also include the installation of associated breakers and other electrical equipment as required. The estimate for this alternative is approximately $12.2 million and was rejected as not being the least-cost alternative.

4.2.5 Alternative 5: Defer

The alternative of not proceeding with this project in 2021 is not recommended. The inability to meet firm transformation capacity at Wabush Substation violates Hydro's Transmission Planning Criteria that transformers shall not be overloaded under normal operation, or in the event of the failure of the largest power transformer. Load forecasts indicate that the peak demand for the Wabush Substation is expected to reach 22.8 MW by the winter of 2021. The substation's firm capacity has already been exceeded by approximately 10%, and load forecasts predict that peak loads will increase.

In the event of a failure to transformer T6, the maximum sustainable load while the spare transformer is being energized is 8.3 MVA. Once the spare transformer is online, the total transformation capacity that can be sustained is 20.6 MVA, which is less than the actual existing peak demand. In addition to a shortfall of firm power transformer capacity, the configuration of the Wabush Substation results in other reliability concerns. The substation does not currently utilize a modern protection scheme that incorporates motor operated disconnect switches or low side circuit breakers on the power transformers. Therefore, the substation configuration does not permit the selective isolation of electrical faults within the station; Wabush customers on multiple feeders would be affected by such an event (potentially all the customers on either bus B5 or B3). In addition to this, a lack of relay records,

faults traces and operational data also causes delays in the troubleshooting process when faults occur. Further, the lack of a bus tie breaker at the Wabush Substation also limits Hydro's ability to minimize power interruptions during planned substation work.

4.3 Recommended Alternative

Hydro recommends the Wabush Substation Upgrade - Three Transformer Configuration option (Alternative 1). This is the least-cost alternative which addresses transformer capacity concerns and also addresses protection and communication deficiencies within the station.

5.0 Project Description

This is a three-year project to complete a number of upgrades within the Wabush Substation. The project consists of the following:

- Removal of 46/12.5 kV transformers T3 and T5. Transformers to be stored for possible future use;
- Removal of all manual disconnect switches associated with transformers T3 and T5;
- Removal of 46 kV circuit breaker WA36-CB1, associated disconnects, bypass switch, and surge arresters;
- Purchase and installation of one, 46/4.16-12.5 kV, 20/26.7 MVA transformer complete with on-load tap changer;
- Upgrades to 12.5 and 46 kV bus work including the replacement of any 1/0 conductor 46 kV bus work with 4/0 conductor;
- Purchase and installation of three, 2000 A, 15 kV vacuum circuit breakers complete with two sets of current transformers ("CT") for the secondary of each power transformer;
- Purchase and installation of one, 2000 A, 15 kV vacuum circuit breaker complete with two sets of CTs and two disconnect switches;
- Purchase and installation of three, 46 kV motor operated disconnect switches to be located between bus B4 and the three transformers;
- Purchase and installation of three, 12.5 kV disconnect switches to be located between bus B5 and transformer T6 and between bus B3 and transformers T4 and T7;

- Purchase and installation of six sets of surge arresters to be installed on each side of transformers T4, T6 and T7;
- Purchase and installation of a new 72.5 kV, 2000 A SF_6 breaker complete with two sets of CTs, two motor-operated disconnect switches (one with a line to ground switch), and a bypass-fused disconnect switch to replace WA36-CB1;
- Purchase and installation of one 400 A, 12.5 kV voltage regulator bank to be installed on feeder L13;
- Purchase of one spare 400 A voltage regulator;
- Purchase and installation of a gang-operated disconnect switch to serve as a tie switch between feeder L11 and feeder L13;
- Purchase and implementation of a SCADA system;
- Purchase and installation of protection and control equipment including transformer protection panels, bus protection panel, feeder protection panel, and battery banks and chargers;
- Replacement of the control building and integration of Automated Metering Equipment to the new control building;
- Upgrades to the station grounding; and
- All necessary civil work required to accommodate the new equipment and upgrades.

The estimate for this project is shown in Table 1.

Table 1: Project Estimate ($000)

Project Cost	2021	2022	2023	Total
Material Supply	120.0	1,736.2	547.1	**2403.3**
Labour	325.9	391.0	356.6	**1,073.5**
Consultant	0.0	188.8	206.8	**395.6**
Contract Work	577.8	3,018.3	1,146.9	**4,743.0**
Other Direct Costs	7.5	39.9	48.8	**96.2**
Interest and Escalation	52.5	453.4	404.7	**910.6**
Contingency	103.0	537.5	230.7	**871.2**
Total	**1,186.7**	**6,365.1**	**2,941.6**	**10,493.4**

The anticipated project schedule is shown in Table 2.

Table 2: Project Schedule

Activity	Start Date	End Date
Planning:		
Open project and, review schedule	January 2021	February 2021
Design:		
Conduct site visits and complete detailed design	February 2021	March 2021
Procurement 1:		
Order long lead items and tender and award contracts	April 2021	May 2021
Construction/Commissioning (Year 1):		
Complete yard extension and order and install voltage regulators	June 2021	September 2021
Procurement 2:		
Order long lead items for upcoming year and tender and award contracts	October 2021	February 2022
Construction/Commissioning (Year 2):		
Install power transformer, 46 kV breaker, and disconnect switches, and install control building	May 2022	October 2022
Procurement 3:		
Order long lead items for upcoming year and tender and award contracts	October 2022	February 2023
Construction/Commissioning (Year 3):		
Install low voltage breakers and disconnect switches, complete communication upgrade, and remove old control building	May 2023	October 2023
Closeout:		
Project closeout	November 2023	December 2023

6.0 Conclusion

Hydro's analysis of the Wabush Substation concludes that there are transformation capacity issues. It is recommended that these issues be addressed via the installation of additional transformer capacity. It is also recognized that station reliability improvements are warranted to update this station's protection and station monitoring to current Hydro standards for stations of similar load levels.

Attachment 1

Labrador West 46 kV System Expansion

Wabush Substation Recommended Upgrade

newfoundland labrador hydro
a nalcor energy company



Labrador West 46 kV System Expansion
Wabush Substation Recommended Upgrade

July 2020

A report to the Board of Commissioners of Public Utilities

newfoundland labrador hydro
a nalcor energy company

Contents

1.0 Introduction 1
2.0 Overview 1
2.1 Existing Electrical Infrastructure in Wabush 1
2.1.1 Wabush Transmission Line L36 3
2.1.2 Wabush Substation 3
2.2 Load Forecast 4
3.0 Reliability Concerns at the Wabush Substation 5
3.1 Transformer Capacity Concerns 5
3.1.1 Power Transformer Ratings 5
3.1.2 Consideration of Transmission Planning Criteria 6
3.1.3 Consideration of Transmission Planning Power Transformer Ratings 7
3.1.4 Consideration of Distribution Planning Power Transformer Ratings 8
3.1.5 Consideration of Transformer Overload Capability 8
3.1.6 Customer Impacts of a Transformer Failure at Wabush Substation 9
3.1.7 Summary of Transformer Capacity Concerns 10
3.2 Other Station Reliability Considerations 12
4.0 Wabush Substation Power Transformer Upgrade Requirements 12
4.1 Study Assumptions 12
5.0 Description of Recommended Upgrade 13
6.0 Conclusion 19

List of Appendices

Appendix A: Single-Line Diagram

Appendix B: Load Flow Analysis Results

1.0 Introduction

This report summarizes the analysis completed to assess the transformation capacity at the Wabush Substation, in order to determine upgrade requirements to meet the Baseline Load Forecast and to provide station reliability improvements. The analysis is based on a forecasted load growth period of 25 years, from 2020–2021 to 2045–2046.

2.0 Overview

2.1 Existing Electrical Infrastructure in Wabush

The electrical infrastructure in Labrador City and Wabush is owned, operated, and maintained by Newofundland and Labrador ("Hydro"). The towns of Wabush and Labrador City are located in western Labrador near the Quebec border and have a population of approximately 1,900 and 8,600 people, respectively.

Figure 1 is a map of Labrador showing the geographical location of the towns.

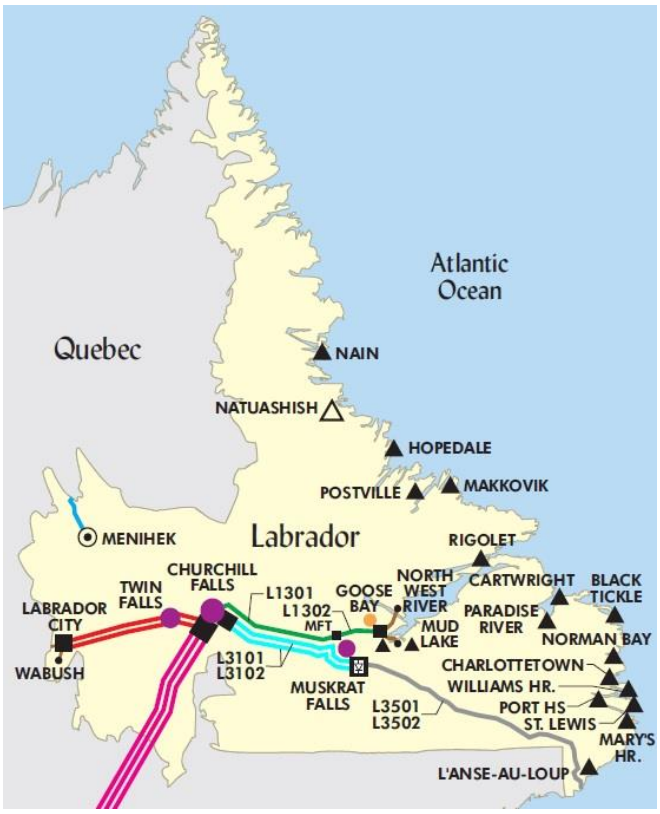

Figure 1: Labrador Electrical System

The Wabush System supplies electrical power to the customers in the Town of Wabush. The system consists of a 46 kV transmission line, Line 36 ("L36"), a distribution substation (Wabush Substation), and six, 12.5 kV distribution feeders: Line 3 ("L3"), Line 7 ("L7"), Line 9 ("L9"), Line 11 ("L11"), Line 12 ("L12"), and Line 13 ("L13").

The Wabush Terminal Station, not to be confused with the Wabush Substation, is supplied by two, 230 kV transmission lines from Churchill Falls. The Wabush Terminal Station steps down the voltage from 230 kV to 46 kV, which is then distributed to Labrador City, Iron Ore Company of Canada ("IOC"), Wabush Mines (operated by Tacora Ltd.) and the Wabush Substation. The Wabush Substation then steps the voltage down to 12.5 kV, which is then distributed to the Town of Wabush. Figure 2 is a block diagram showing the configuration of the Labrador West Interconnected System.

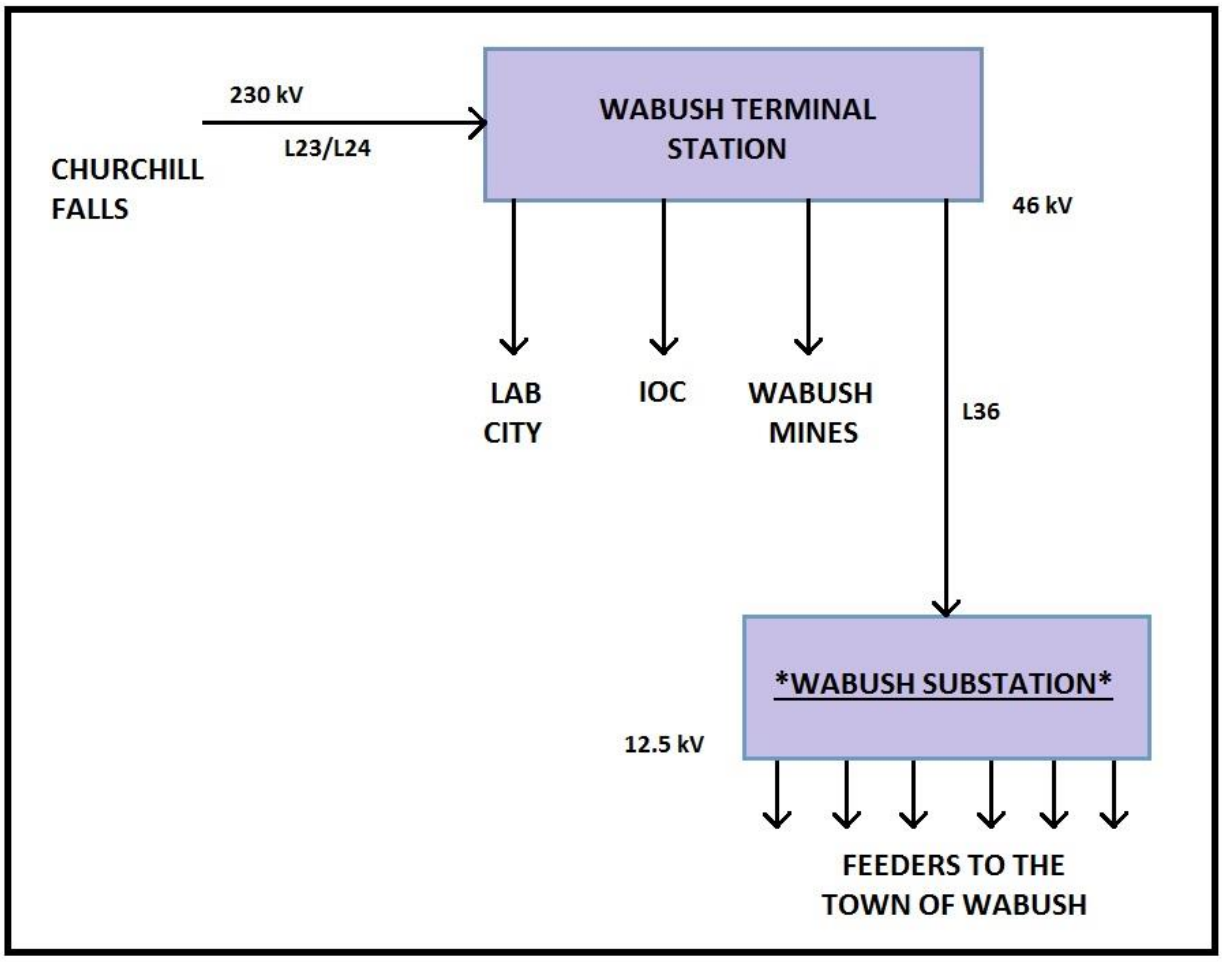

Figure 2: Labrador West Interconnected System

2.1.1 Wabush Transmission Line L36

The primary supply to the Wabush distribution system is transmission line L36, a single-source 46 kV line that supplies power to Hydro's Wabush Substation from the Wabush Terminal Station (Bus 15). The line is 4.1 km long and utilizes three-wire (delta) construction supporting 4/0 AASC phase conductors. The line was rerouted and completely rebuilt in 2009. The line is the sole supply for the Wabush Substation and voltage regulation for the entire system is currently provided through this line by the synchronous condensers located at the Wabush Terminal Station.

2.1.2 Wabush Substation

The Wabush Substation has a total of four step-down power transformers that reduce the transmission line voltage from 46 kV to 12.5 kV, as listed in Table 1.

Table 1: Wabush Substation Power Transformers

Transformer	Status	Voltage Rating (kV)	Power Rating (MVA) (25°C Ambient) [1]
T3	In Service	46/25-12.5	5/6.6/8.3
T4	In Service	46/25-12.5	5/6.6/8.3
T5	Spare	46/12.5	3/4
T6	In Service	46/12.5-4.16	10/13.3/16.67

Approximately 31% of the Wabush town load is served by transformer T3. Transformer T4 in parallel with T6 serve the remaining 69% of the town load. Transformer T5 is a spare and is currently not in service but can be connected to either bus B3 or bus B5 within approximately eight hours in the event of a failure to transformer T3 or T6. The spare transformer does not require relocation to be put in service. It is noted that transformer T5 cannot be connected at the same time as T6, due to clearance limitations in the box structure. A single-line diagram of the Wabush Substation is provided in Appendix A.

The substation has a total installed capacity (at 25°C ambient) of 37.3 MVA. The firm transformation capacity[2] of the substation is 20.6 MVA.

[1] Calculated in accordance with "NLSO Standard Transmission Facilities Rating Guide," Doc # TP-S-001, Newfoundland and Labrador Hydro, November 1, 2017, sec. 6.1.
<https://www.oatioasis.com/NLSO/NLSOdocs/Transmission_Facilities_Rating_Guide.pdf>

[2] The firm transformation capacity is the total station capacity less the transformer with the largest rating.

2.2 Load Forecast

A 25-year load forecast for the Wabush Substation is provided in Table 2. These values are based on the Long Term Labrador Interconnected Utility Load Forecast Summary – P50 dated May 28, 2019. The forecast was extended to 2046 by adding the 5-year (2037–2041) average incremental increase of 30 kW to years 2042–2046.

Table 2: Long-Term Labrador Interconnected Utility Load Forecast
Town of Wabush Load (Wabush Substation)

Year	Peak (kW)[3] P50	Peak (kW)[3] P90
2020-2021	22,323	22,803
2021-2022	22,397	22,877
2022-2023	22,473	22,953
2023-2024	22,595	23,075
2024-2025	22,717	23,197
2025-2026	22,765	23,245
2026-2027	22,815	23,295
2027-2028	22,865	23,345
2028-2029	22,916	23,396
2029-2030	22,966	23,446
2030-2031	23,000	23,480
2031-2032	23,030	23,510
2032-2033	23,059	23,539
2033-2034	23,088	23,568
2034-2035	23,118	23,598
2035-2036	23,147	23,627
2036-2037	23,177	23,657
2037-2038	23,206	23,686
2038-2039	23,236	23,716
2039-2040	23,266	23,746
2040-2041	23,295	23,775
2041-2042	23,325	23,805
2042-2043	23,355	23,835
2043-2044	23,385	23,865
2044-2045	23,415	23,895
2045-2046	23,445	23,925

[3] Peak equates to distribution system requirements at terminal station delivery points.

3.0 Reliability Concerns at the Wabush Substation

The following sections include descriptions of the reliability concerns at the Wabush Substation. Details are provided for both transformer capacity concerns as well as station configuration concerns.

3.1 Transformer Capacity Concerns

Transformer capacity concerns at the Wabush Substation are discussed in the sections below.

3.1.1 Power Transformer Ratings

A complicating factor in consideration of power transformer capacity at the Wabush Substation is that assessments for the station have historically been performed by Distribution Planning. However, in 2017, equipment operating in Labrador City and Wabush at 46 kV became the responsibility of the Newfoundland and Labrador System Operator ("NLSO") and was therefore reclassified from distribution to transmission.

It is noted that Distribution Planning and Transmission Planning practices for the calculation of transformer ratings are different for reasons that are summarized in the sections below. For the purposes of this investigation, power transformer capacity will be investigated from both standpoints.

The primary difference in the rating calculation methodologies relates to the consideration of ambient temperature. Distribution Planning applied the 0°C ambient temperature ratings when rating the Wabush Substation transformers. The NLSO standard[4] involves the application of a 25°C ambient temperature ratings to all loading scenarios, including summer, spring/fall and winter.

The rationale for this difference is explained in the following excerpt from the NLSO Transmission Facilities Rating Guide:

> For transmission planning purposes, the summer, spring/fall and winter rating limits of all power transformers and autotransformers will be equal to the nameplate rating at 25°C ambient as provided by the manufacturer.
>
> Given the time requirements for the procurement of a new transformer(s), once installed unit(s) reach nameplate rating the increase in transformer rating limit associated with lower ambient air temperatures at time of system peak (i.e. spring/fall and winter) available from transformers designed to CAN/CSA-C88-M90 is allocated as

[4] "NLSO Standard Transmission Facilities Rating Guide," Doc # TP-S-001, Newfoundland and Labrador Hydro, November 1, 2017, sec. 6.1. <https://www.oatioasis.com/NLSO/NLSOdocs/Transmission_Facilities_Rating_Guide.pdf>

> operational margin to avoid loss of transformer life due to excessive loading in the period between transformer reaching 100% of nameplate rating and installation of additional transformer capacity following transformer failure in multiple transformer installations.

This approach represents Hydro's historical practice and it is noted that very few power transformer failures have been experienced since the inception of the transmission system in the 1960s.[5]

The resulting power transformer ratings from both Distribution Planning and Transmission Planning standpoints are provided in Table 3. It is noted that this change in methodology has resulted in a 4.9 MVA reduction in firm transformer capacity at the Substation.

Table 3: Comparison of Transformer Power Ratings at Wabush Substation

Transformer	Status	Voltage Rating (kV)	Distribution Power Rating (MVA) (0°C Ambient)	Transmission Power Rating (MVA) (25°C Ambient)
T3	In Service	46/25-12.5	6.25/8.25/10.3	5/6.6/8.3
T4	In Service	46/25-12.5	6.25/8.25/10.3	5/6.6/8.3
T5	Spare	46/12.5	3.7/4.9	3/4
T6	In Service	46/12.5-4.16	12.3/16.3/20.4	10/13.3/16.67
		TOTAL MVA (N-0):	**45.9**	**37.3**
		TOTAL MVA (N-1):	**25.5**	**20.6**

3.1.2 Consideration of Transmission Planning Criteria

Power transformers in the Newfoundland and Labrador Interconnected Transmission System are assessed on the basis of Transmission Planning Criteria[6], which include the following excerpts:

> Transformer outages must be treated differently than outages to other transmission equipment given the long lead times for repair and/or replacement.

> Transformer additions at 138/66 kV, 66/25-12.5 kV terminal stations with one transformer per voltage class shall be planned on the basis of being able to install the Hydro mobile transformer or one of Newfoundland Power's mobile transformers under agreement between the two parties with respect to use of mobile transformer equipment. These transformers are generally located on radial portions of the system.

[5] Failures include Howley Terminal Station transformer T2 in 1990, and Sunnyside Terminal Station transformer T1 in 2014. It is noted that other power transformers have experience tap changer failures, but such failures are less directly correlated with transformer loading.

[6] "NLSO Standard Transmission Planning Criteria," Doc # TP-S-007, Newfoundland and Labrador Hydro, April 13, 2020. <https://www.oasis.oati.com/woa/docs/NLSO/NLSOdocs/TP-S-007_Transmission_Planning_Criteria_UPDATED_04132020.pdf>

> Transformer additions at all major (≥230 kV) terminal stations (i.e. two or more transformers per voltage class) shall be planned on the basis of being able to withstand the loss of the largest unit (i.e. installed spare transformer capacity) such that all firm loads can be supplied during system peak.

The Wabush Substation does not clearly fit in to either of the categories described in these excerpts. The station contains multiple power transformers, but is not classified as a "major" terminal station and does not have equipment in the 230 kV voltage class. It is also not appropriate that the station "be planned on the basis of being able to install the Hydro mobile transformer or one of Newfoundland Power's mobile transformers." Logistically, the relocation of a mobile transformer from the Island Interconnected System cannot practically be executed in a reasonable timeframe. Further, the relocation of a mobile power transformer to such a distant location would result in an exposure for all Island Interconnected System terminal stations that have been planned in accordance with the criteria defined above.

On this basis, it is recommended that the Wabush Substation be planned to withstand the loss of the largest unit (i.e., installed spare transformer capacity) such that all firm loads can be supplied during system peak.

3.1.3 Consideration of Transmission Planning Power Transformer Ratings

As per the load forecast provided in Section 2.2, peak demand for the Wabush Substation is expected to reach 22.3 MW (P50)/22.8 MW (P90) this coming winter and 23.4 MW (P50)/23.9 MW (P90) by the winter of 2045-2046. The corresponding capacities in MVA[7] are presented in Table 4.

Table 4: Forecasted Peak Demand at Wabush Substation

	Forecasted Peak Demand			
	P50 Forecast		P90 Forecast	
2020–2021	22.3 MW	22.9 MVA	22.8 MW	23.4 MVA
2045–2046	23.4 MW	24.0 MVA	23.9 MW	24.5 MVA

[7] The power factor during peak conditions is assumed to be 0.975.

As per Table 3, the firm transformer capacity at the Wabush Substation is 20.6 MVA when calculated in accordance with Transmission Planning standards. There is therefore a violation to Transmission Planning Criteria as there is insufficient power transformer capacity to meet peak load. As is the case for all other Hydro terminal stations, such a violation would trigger the requirement for the installation of additional power transformer capacity.

3.1.4 Consideration of Distribution Planning Power Transformer Ratings

As per Table 3, the firm transformer capacity at the Wabush Substation is 25.5 MVA when calculated in accordance with Distribution Planning methodology. On this basis, available transformer capacity is calculated in Table 6. The table indicates that, for a P50 load forecast, available capacity is at 2.5 MW for the coming winter and will be reduced to 1.4 MW by the end of the 25-year study period. For a P90 load forecast, available capacity is at 2.1 MW for the coming winter and will be reduced to 0.9 MW by the end of the 25-year study period.

Table 5: Available Firm Transformer Capacity at Wabush Substation (Assuming Distributing Planning Ratings for Power Transformers)

	Available Firm Capacity (MW)	
	P50 Forecast	**P90 Forecast**
2020–2021	2.5	2.1
2045–2046	1.4	0.9

On the basis of the above, load growth in the range of 2.1 MW to 2.5 MW would trigger a requirement for increased transformer capacity.

The operational risk associated with having limited available transformer capacity must be assessed in the context in the Town of Wabush, where there is an appreciable risk for incremental load above the baseline load forecast. In recent months, Hydro has been approached with multiple prospective developments in this area, including an industrial park. The cyclical nature of the iron ore industry is also a consideration where commodity price increases may result in rapid development in the area.

3.1.5 Consideration of Transformer Overload Capability

As stated above in Section 3.1.1, Hydro's Transmission Planning practice is to apply more conservative power transformer ratings in consideration of the time requirements for procurement, which may be in excess of two years following project approval.

Another consideration of this practice is that it permits an operational margin where transformers may be overloaded to safe levels with minimal sacrifice to their expected life. To this end, Hydro has developed an operating procedure[8] pertaining to the overloading of transformers in emergency situations. This procedure is based on the ANSI/IEEE C57.92–1981 "American National Standard—Guide for Loading Mineral-Oil-Immersed Power Transformers" and includes recommended overload capabilities, as summarized in Table 6. It is noted that these guidelines are based upon the transformer ratings at 30°C ambient temperature.

Table 6: Power Transformer Loading Guidelines – General Emergency Ratings

Allowable Loading in pu Of Continuous Ampere Rating	
Peak Load Duration (hours)	**Ambient Temperature <0°C**
0.5	1.50
1	1.41
2	1.32
4	1.26
8	1.23
24	1.18

This standard operating procedure is applicable at all other Hydro terminal stations. However, it cannot be utilized at the Wabush Substation if Distribution Planning ratings are applied to the power transformers. Rather, the Distribution Planning ratings do not allow for any operational margin as transformers are permitted to be loaded to a 0°C ambient rating. Any loading of the transformers in excess of these ratings is unacceptable as it would result in the loss of life and increase the probability of failure.

3.1.6 Customer Impacts of a Transformer Failure at Wabush Substation

If a transformer at the Wabush Substation were to fail under peak load conditions, there would be serious impacts to customers. The impacts, and their justifications, include the following:

- There are currently no additional spare transformers or mobile transformer units that could be installed quickly to meet the firm peak loading capacity;

[8] As per "Terminal Station Transfomer Overloading Guidelines," Doc # TOP-P-057.

- The initial outage following the transformer failure would impact all customers, as it would take at least eight hours to connect the spare transformer T5. It is noted that winter conditions in Wabush are extreme, with ambient temperatures approaching a frigid -30°C. If the transformer failure occurred during winter, this could lead to safety concerns for residents, as well as the potential for damage claims from situations such as frozen pipes;
- Once the spare transformer was in service, there would still be a deficit of transformation capacity. Therefore, there would be customer outages for some feeders until mobile generation was sourced and installed. This could potentially impact both residential customers, as well as businesses in the Wabush Industrial Park;
- It would take a minimum of two years to source and install a new transformer, due to the long unit lead times, as well as the short construction season window in Wabush, which runs from mid-May to mid-September;
- The leasing and operation of mobile generation over a two-year period would likely exceed the cost of a replacement power transformer. The logistics of an emergency installation in winter months would be particularly problematic; and
- Since there is no SCADA monitoring system in place, the system operators do not have access to the precise loading of the transformers in real time, which would make it difficult to apply loading guidelines in emergency situations (they only have access to a calculated loading value from 46 kV transmission line L36).

It is therefore strongly recommended that Transmission Planning standard transformer rating practices be employed. Such an approach would be consistent will all other terminal stations in the province as a prudent basis for the planning for firm station transformation capacity. According to last winter's Industrial Billing data, the Substation is already experiencing peak demands at 10% above the firm capacity of the Substation. Immediate action is therefore recommended.

3.1.7 Summary of Transformer Capacity Concerns

As per the previous sections, there are power transformer loading concerns at the Wabush Substation.

If conventional Transmission Planning power transformer ratings are applied, there would be a violation of firm transformer capacity this coming winter and action is required.

If Distribution Planning power transformer ratings are applied, load growth in the order of 2.1 MW to 2.5 MW could be accommodated before addition power transformer capacity is required. However, such an approach does not allow for any operational margin and transformer overloading would not be permitted.

If unforeseen load growth were to occur in the Town of Wabush, such as a sudden boom cycle in the iron ore industry, there would be no capacity to accommodate new customers until additional transformer capacity were installed. As stated above, the resulting load restriction would be in effect for a period that may exceed two years while new transformers were being procured. It is also noted that such a restriction at the Wabush Substation would be more onerous than those currently in place in Labrador as all new customer interconnections would be prohibited, without exception.

Alternatively, normal load growth could be permitted, but proponents of any major unforeseen developments in the Town of Wabush would be delayed until incremental transformer capacity were placed in service. Such an approach would be in line with existing load restrictions; however, it is Hydro's objective is that once the Network Addition Policy and the Labrador Transmission System Expansion Plan have been fully reviewed and recommended outcomes are in place, the transmission system shall be planned in a manner that has appropriate flexibility to accomodate economic development.

Hydro's recommendation with respect to the Wabush Substation is therefore that power transformer ratings be calculated in accordance with standard Transmission Planning practices as is the case for all other stations within the Newfoundland and Labrador Interconnected System. This approach results in an immediate capacity violation and it is recommended that it be resolved with the installation of incremental transformer capacity.

Such an approach would be in accordance with Good Utility Practice where the transmission system is planned to have an inherent operational margin. Operation margin is a major consideration for power transformers due to long lead times associated with procurement. This is of particular importance in western Labrador as the region is characterized by sudden unforeseen load growth due to the cyclical nature of the iron ore prices.

3.2 Other Station Reliability Considerations

In addition to a shortfall of firm power transformer capacity, the configuration of the Wabush Substation results in other reliability concerns. The substation does not currently utilize a modern protection scheme that incorporates motor operated disconnect switches, low side circuit breakers on the power transformers, or a bus tie with a circuit breaker. Therefore, the substation configuration does not permit the isolation of electrical faults within the station and Wabush customers on multiple feeders would be affected by such an event (potentially all the customers on either bus B5 or B3). In addition to this, a lack of condition monitoring also causes delays in the trouble shooting process when faults occur. The station upgrades summarized in Section 5 are therefore recommended to ensure reliable operation for customers.

4.0 Wabush Substation Power Transformer Upgrade Requirements

As part of Hydro's "Labrador Interconnected System Transmission Expansion Study,"[9] a three transformer solution was proposed. This solution is demonstrated to provide adequate capacity to meet the Baseline Load Forecast for the substation as per the analysis summarized by the assumptions and load flow plots provided in Appendix B.

4.1 Study Assumptions

- Both Churchill Falls units A10 and A11 are in service at full load;
- The Churchill Falls 230 kV bus B23 voltage is held at 238 kV (1.0348 pu);[10]
- The voltages at Wabush Terminal Station 46 kV buses B13 and B15 are held at 46.6 kV (1.013 pu);
- Synchronous condenser bus voltages must be maintained between 13.1 kV (0.95 pu) and 14.5 kV (1.05 pu) for both normal operation, and for contingency situations;
- Expected cryptocurrency mining customer load of 0.8 MW, in accordance with the Baseline Load Forecast;

[9] "Labrador Interconnected System Transmission Expansion Study," Newfoundland and Labrador Hydro, April 3, 2019, rev. 2 (originally filed October 31, 2018).
[10] This represents the low voltage alarm limit for Bus B23.

- The existing Wabush town site load is split between Wabush Substation buses B5 and B3 at 31% and 69% respectively; and
- Load power factors are as follows:
  - Labrador City and Wabush Town Sites: 0.975 for peak cases; and
  - Cryptocurrency mining customers: 0.975.

5.0 Description of Recommended Upgrade

In the Baseline Load Forecast scenario, the recommended 46 kV system expansion for Wabush Substation to ensure the ability to meet firm transformation capacity is defined as follows:

- The utilization of two of the existing 46/12.5 kV transformers, T4 and T6. Transformers T3 and T5 to be stored for possible future use.
- The installation of one new 20/26.7 MVA unit complete with on-load tap changer ("OLTC") for voltage regulation, T7, which is sized to be capable of supporting the entire Town of Wabush load. This transformer's MVA rating could be expanded in the future, as a second bank of fans could be added to increase the rating to 33.3 MVA.
- Transformer T4 in parallel with T6 would be used as spares, in the event of a failure to transformer T7. This station design would accommodate system demand until it exceeds 24.35 MVA, which is forecasted to occur in 2039–2040. At that time, both transformer T4 and T6 would be replaced with one 20/26.7 MVA transformer with OLTC (to be named T8).
- To provide additional reliability, a bus tie circuit breaker would be added between 12.5 kV buses B5 and B3, which would be normally closed. This would allow transformer T7 to provide voltage regulation for both 12.5 kV buses. It is noted that parallel operation of transformers T7 and T6 is not permitted due to short circuit levels exceeding the interrupting rating of the 12.5 kV reclosers.
- A 12.5 kV breaker would be installed on the low side of each power transformer, while motorized disconnects would be installed on the high side. This arrangement would allow for the quick isolation of a fault with minimal disruption to the unaffected areas of the system.
- Based on analysis by Rural Planning, in order to avoid low voltages in the event that transformer T7 is out of service, a voltage regulator would need to be installed at the beginning of feeder L13

to provide voltage regulation. In addition to this, some load from feeder L11 would need to be transferred to feeder L13, resulting in the installation of a new tie point between the two feeders.

- The 46 kV oil filled circuit breaker would be replaced, as it is reaching the end of its useful life.
- A new control building (which would house all the protection, control and communication equipment) would be purchased and installed.
- Space provisions would be made to allow a second 46 kV transmission line to be installed in the future.

Most of the upgrades would be completed within the existing yard with the exception of the new control building which would be installed adjacent to the existing station thus helping to reduce congestion in the station. Construction would be completed in stages to eliminate the need for temporary generation and to minimize the requirement for outages during the construction as the new equipment is installed. Figure 3 depicts the parcel of land that is available for use. It is noted that this location is in alignment with guidelines received from the Town of Wabush with respect to the construction of new terminal station facilities.



Figure 3: Location of Hydro-Owned Land Adjacent to Existing Wabush Substation

The following is a summary of the work involved with this upgrade (refer to Figure 4 and Figure 5 for high-level details of the work required):

- Removal of 46/12.5 kV transformers T3 and T5;
- Removal of all manual disconnect switches associated with transformers T3 and T5;
- Removal of 46 kV circuit breaker WA36-CB1, associated disconnects, bypass switch, and surge arrester;
- Purchase and installation of one, 46/4.16-12.5 kV, 20/26.7 MVA transformer complete with OLTC;
- Upgrades to both 12.5 and 46 kV bus work including the replacement of any 1/0 conductor 46 kV bus work with 4/0 conductor;
- Purchase and installation of three, 2000 A, 15 kV vacuum circuit breakers complete with two sets of current transformers ("CT"), for secondary of each power transformer;
- Purchase and installation of one, 2000 A, 15 kV vacuum circuit breaker complete with two sets of CTs and two disconnect switches;
- Purchase and installation of three, 46 kV motor-operated disconnect switches to be located between bus B4 and the three transformers;
- Purchase and installation of three, 12.5 kV disconnect switches to be located between bus B5 and transformer T6 and between bus B3 and transformers T4 and T7;
- Purchase and installation of six sets of surge arresters to be installed on each side of transformers T4, T6, and T7;
- Purchase and installation of new 72.5 kV, 2000 A SF_6 breaker complete with two sets of CTs, two motor-operated disconnect switches (one with a line to ground switch), and a bypass-fused disconnect switch to replace WA36-CB1;
- Purchase and installation of one 400 A, 12.5 kV voltage regulator bank, to be installed on feeder L13;
- Purchase of one spare 400 A voltage regulator;

- Purchase and installation of a gang operated disconnect switch to serve as a tie switch between feeder L11 and feeder L13 (location TBD);
- Purchase and implementation of a SCADA system;
- Replacement of the control building and integration of the Automated Metering Equipment to the new control building;
- Upgrades to the station grounding; and
- All necessary civil work required to accommodate the new equipment and upgrades.

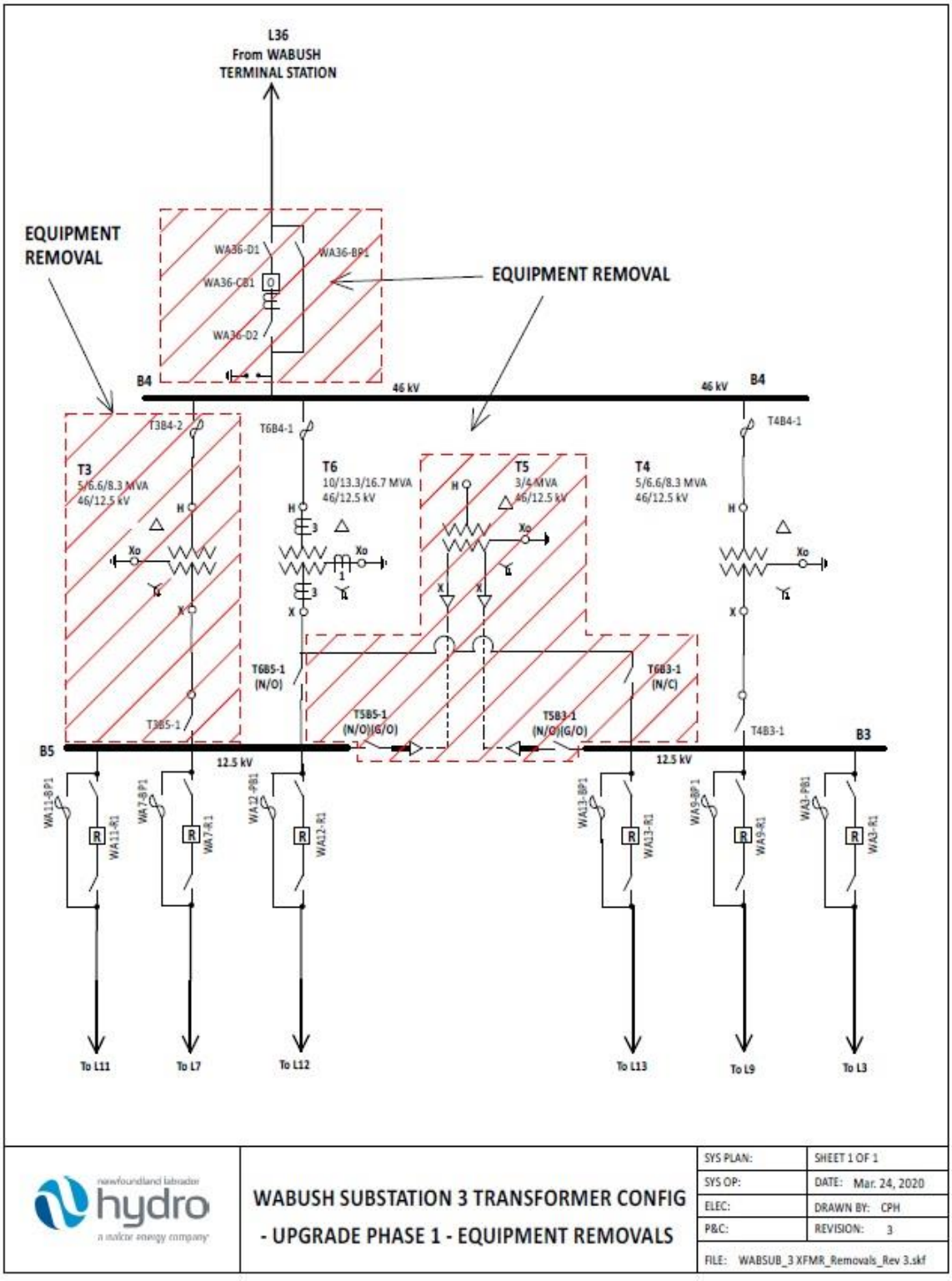

Figure 4: Wabush Substation 3 Transformer Configuration – Upgrade Phase 1 – Equipment Removals

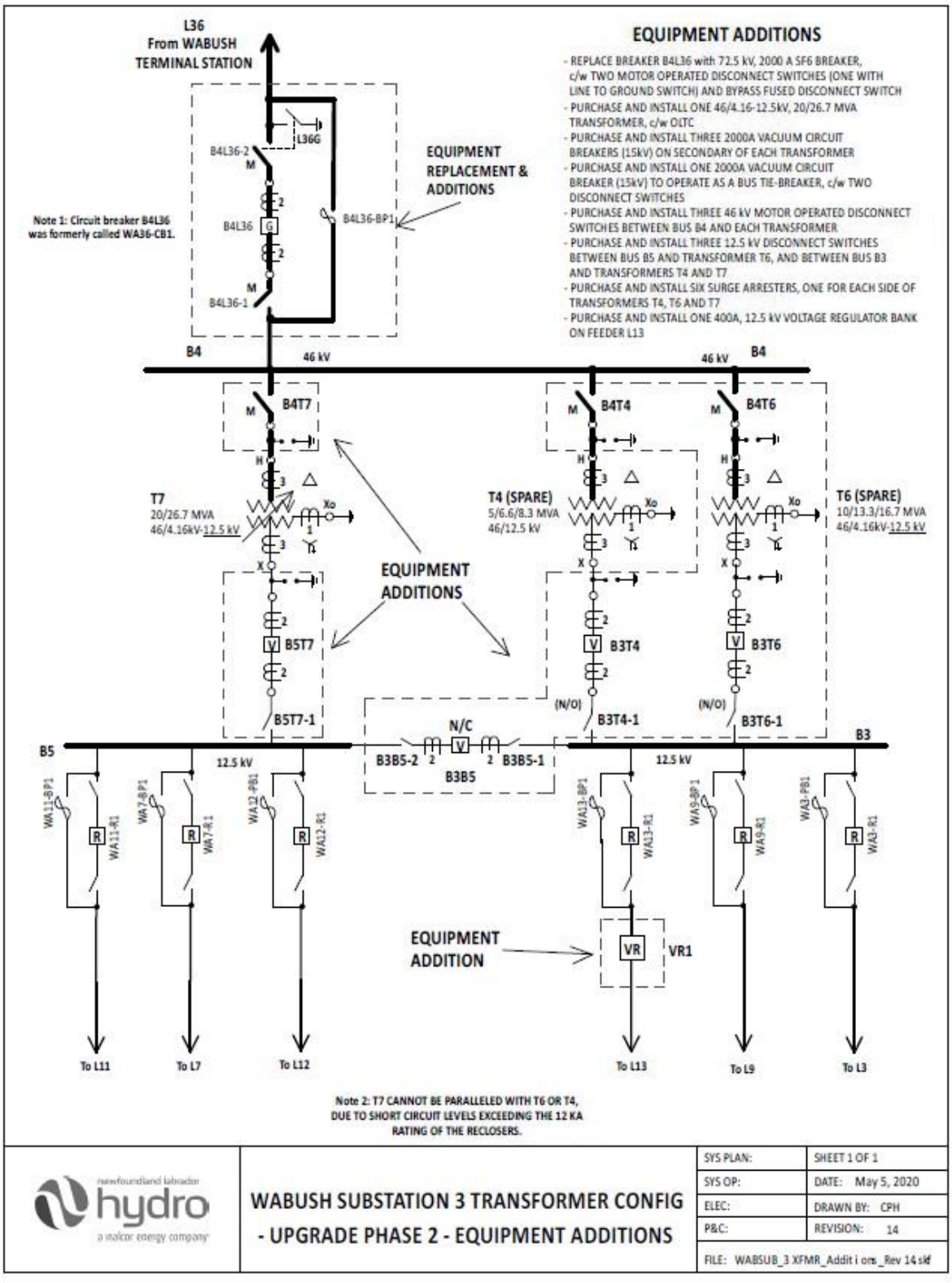

Figure 5: Wabush Substation 3 Transformer Configuration – Upgrade Phase 2 – Equipment Additions

6.0 Conclusion

Hydro's recommendation with respect to the Wabush Substation is that power transformer ratings be calculated in accordance with standard Transmission Planning practices as is the case for all other stations within the Newfoundland and Labrador Interconnected System. This approach results in an immediate capacity violation and it is recommended that it be resolved with the installation of incremental transformer capacity, as summarized in Section 5.0. The recommended station reliability improvements, as also presented in Section 5.0, will bring the station's protection and condition monitoring up to the same standards as other stations in western Labrador.

Such an approach would be in accordance with Good Utility Practice where the transmission system is planned to have an inherent operational margin. Operational margin is a major consideration for power transformers due to long lead times associated with procurement. This is of particular importance in western Labrador as the region is characterized by sudden unforeseen load growth due to the cyclical nature of the iron ore prices.

Appendix A

Single-Line Diagram

newfoundland labrador hydro
a nalcor energy company

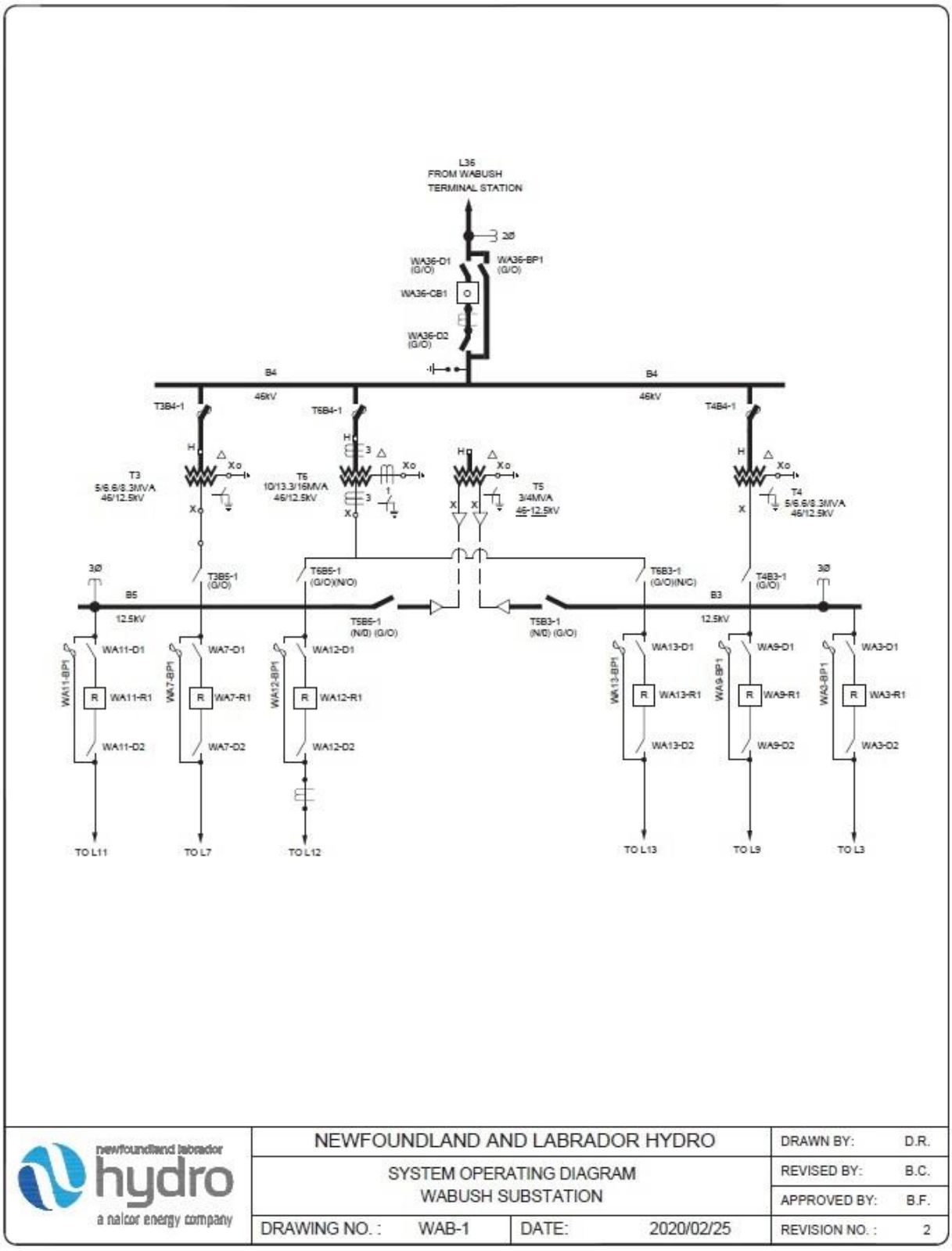

Figure A-1: Existing Wabush Substation Single-Line Diagram

Appendix B

Load Flow Analysis Results

newfoundland labrador hydro
a nalcor energy company

Figure B-1 depicts the Peak P90 Baseline Load Forecast case for the winter of 2020–2021 with the existing Wabush System under normal operations.

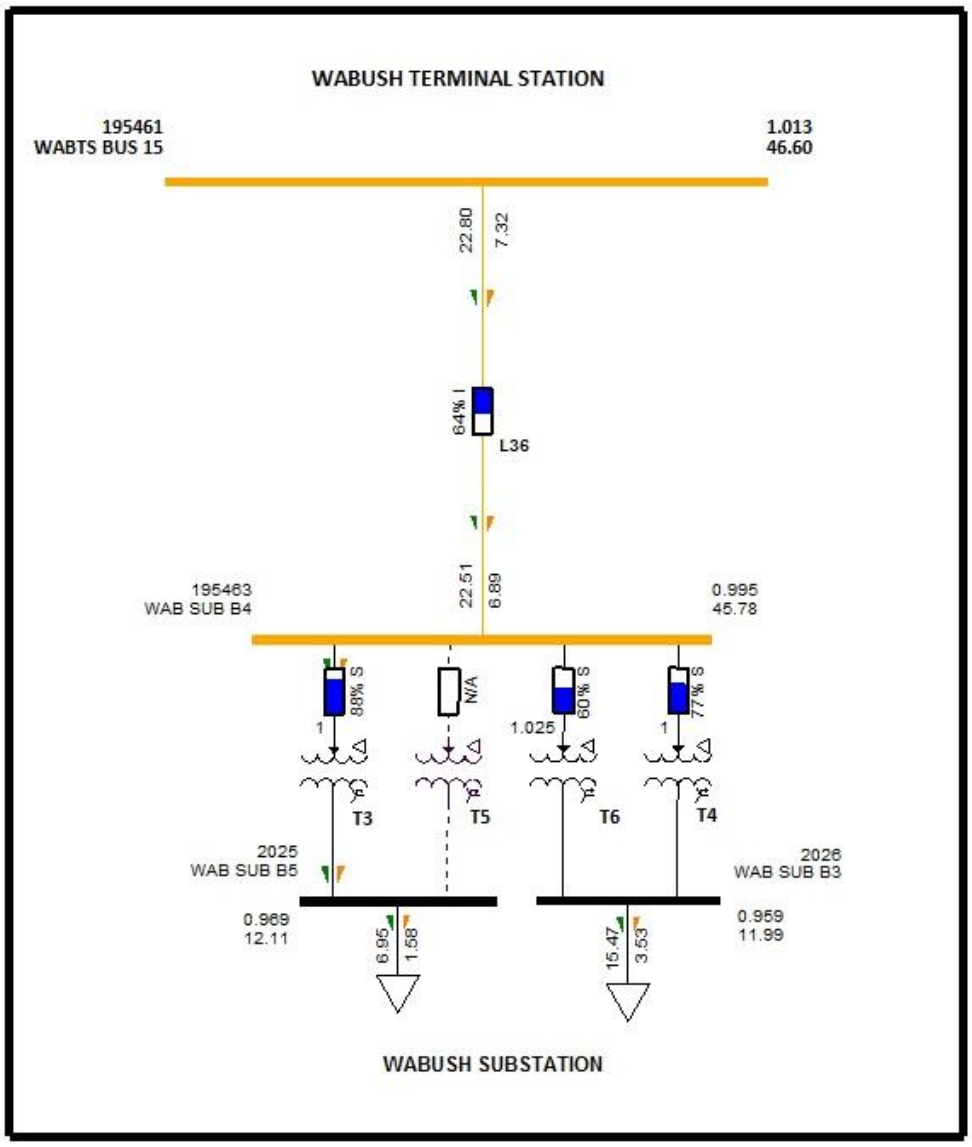

Figure B-1: Existing 2021 Peak P90 Baseline Load Forecast Case under Normal Operations

Figure B-2 depicts the Peak P90 Baseline Load Forecast case for the winter of 2020–2021, with the existing Wabush System under contingency operations. With the loss of transformer T6, transformer T4 has a capacity overload of 206%.

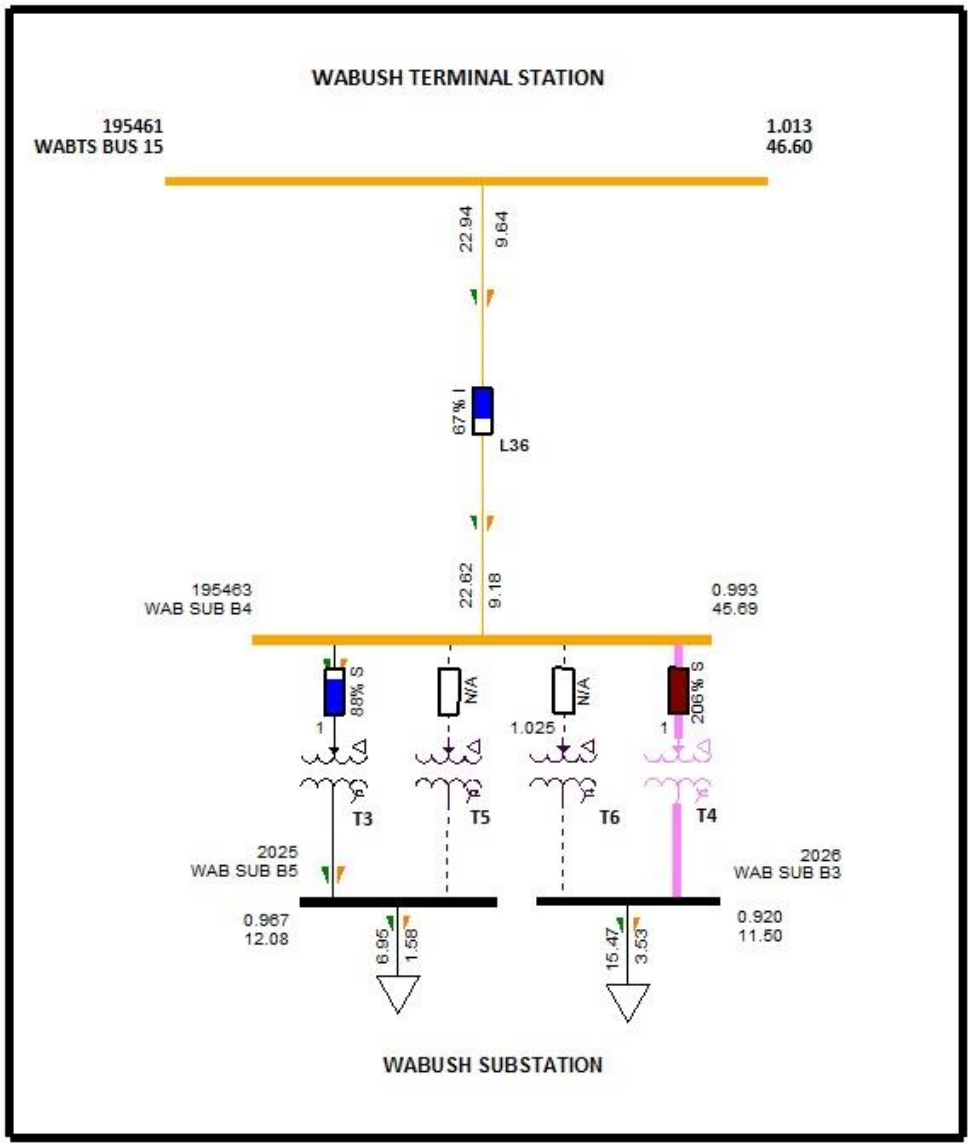

Figure B-2: Existing 2021 Peak P90 Baseline Load Forecast Case under Contingency Operations (Loss of Transformer T6)

The option to put transformer T5 in service and close the bus tie does not provide any appreciable assistance, as in this scenario and depicted in Figure B-3, all three transformers are overloaded.

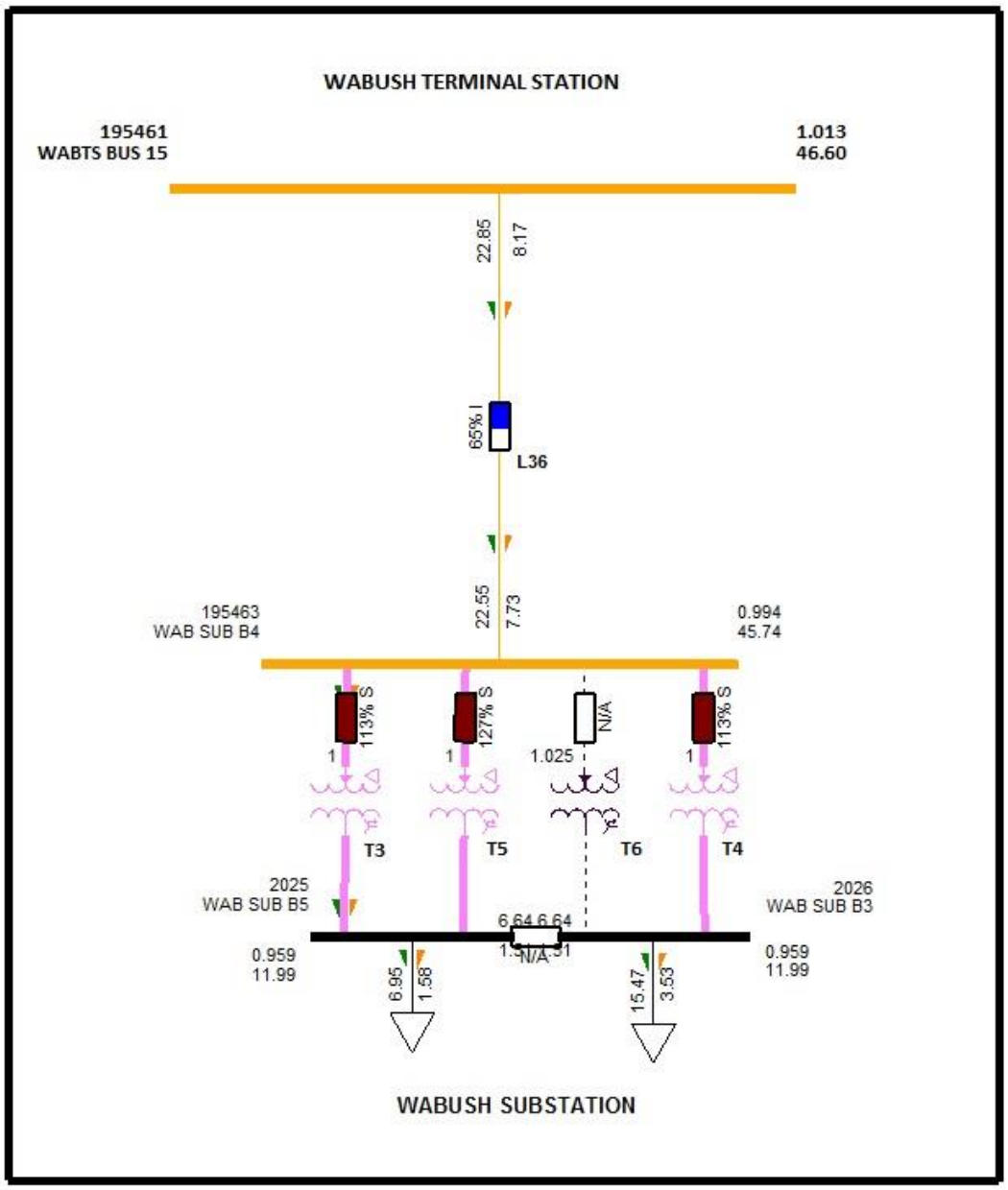

Figure B-3: Existing 2021 Peak P90 Baseline Load Forecast Case under Contingency Operations (Loss of Transformer T6 with T5 in Service and Bus Tie Closed)

Figure B-4 depicts the Peak P90 Baseline Load Forecast case for the winter of 2045–2046 with the upgraded Wabush System under normal operations.

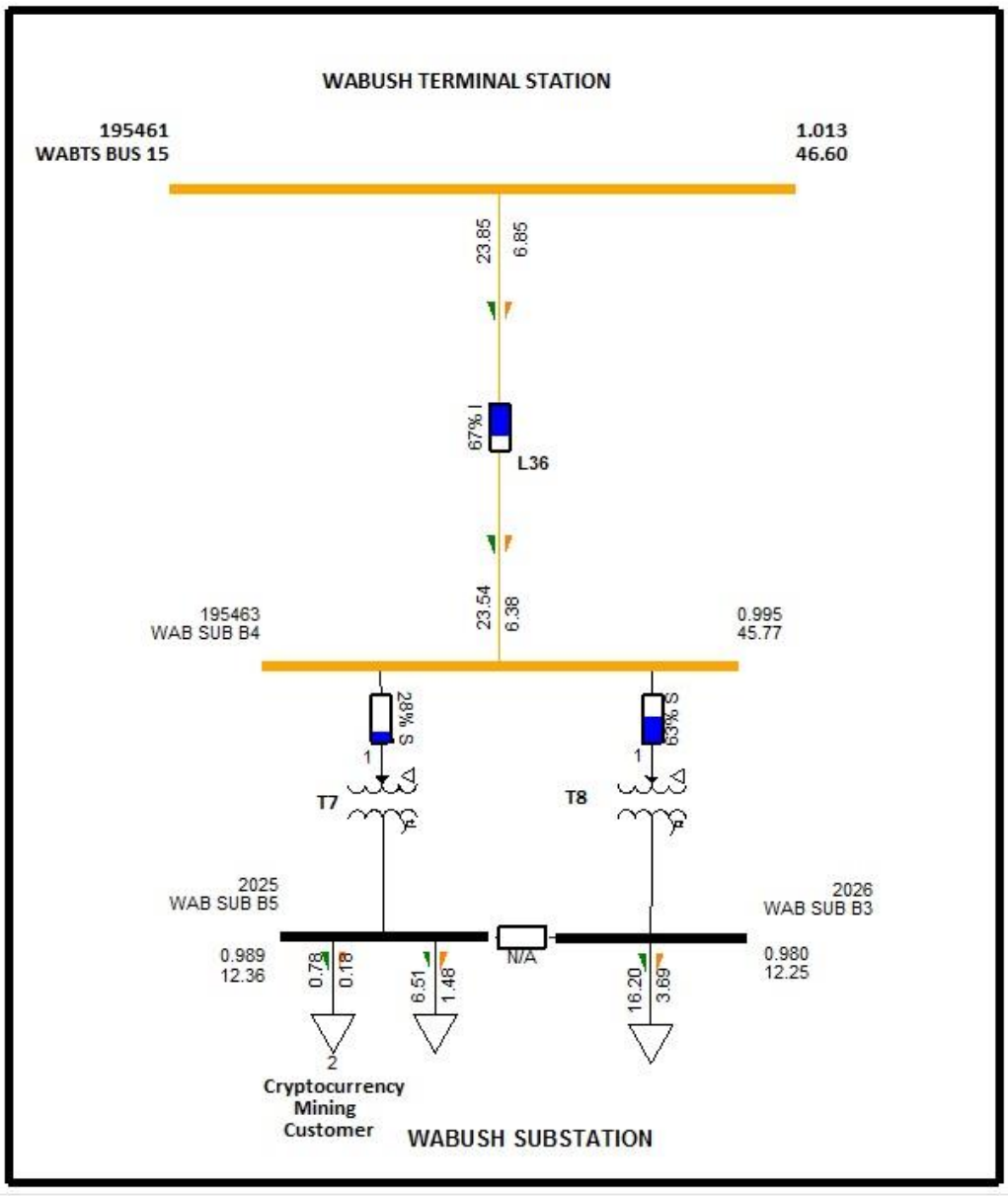

Figure B-4: Upgraded 2046 Peak P90 Baseline Load Forecast Case under Normal Operations

Figure B-5 depicts the Peak P90 Baseline Load Forecast case for the winter of 2045–2046, with the upgraded Wabush System under contingency operations. With the loss of transformer T7, there are no violations.

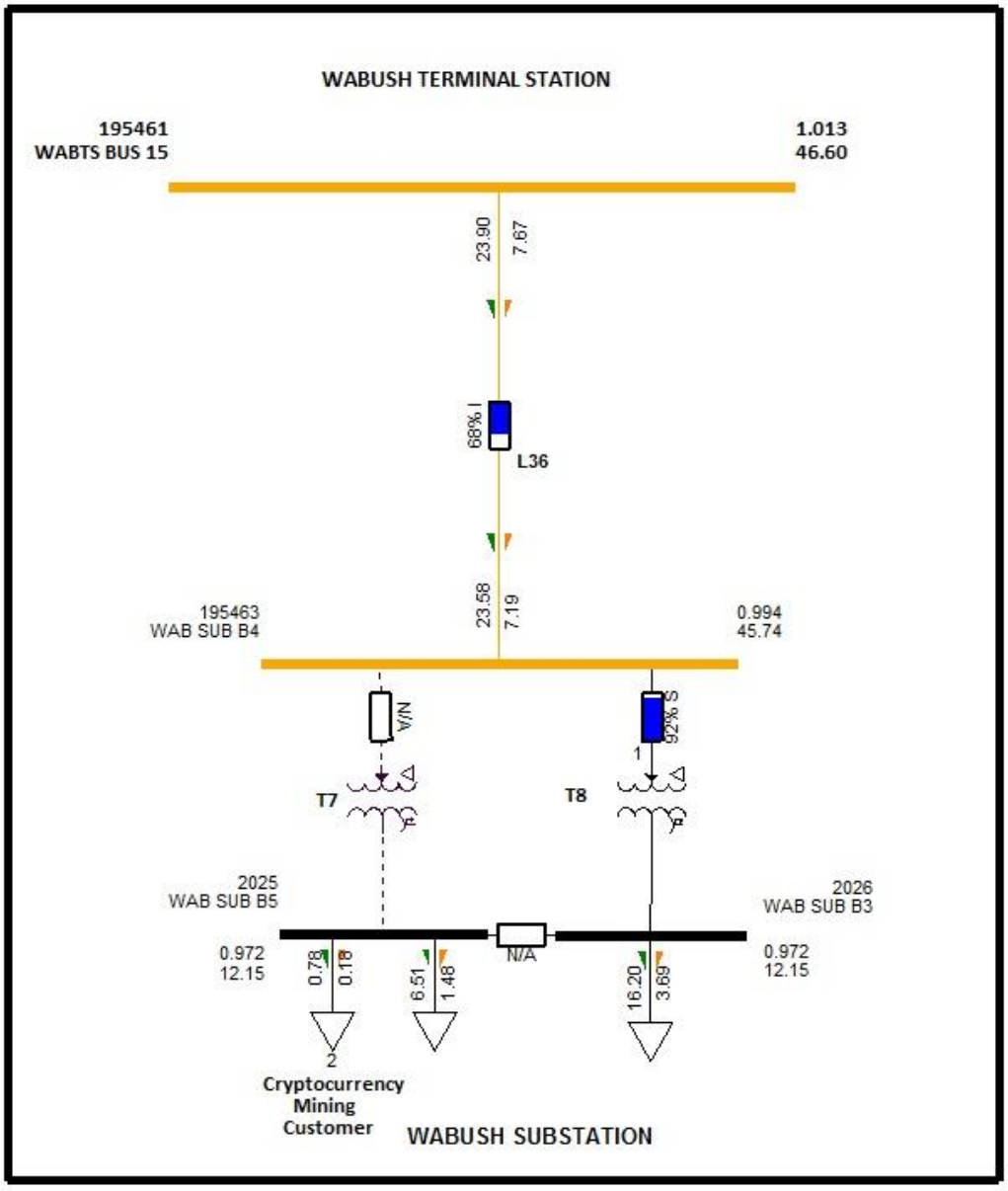

Figure B-5: Upgraded 2046 Peak P90 Baseline Load Forecast Case under Contingency Operations (Transformer T7)

17. Additions for Load Growth
- Happy Valley Line 7

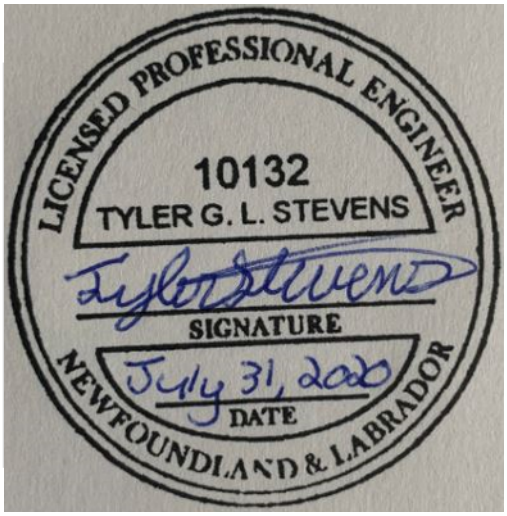

2021 Capital Budget Application

Additions for Load Growth

Happy Valley Line 7

July 2020

A report to the Board of Commissioners of Public Utilities

newfoundland labrador hydro
a nalcor energy company

Executive Summary

Newfoundland and Labrador Hydro ("Hydro") is proposing to upgrade the Happy Valley Distribution System to accommodate load growth on Line 7 in the region. In Sheshatshiu and North West River, recent load growth has caused the overloading of two sets of voltage regulators during peak demand periods. This growth is expected to continue into the near future due to new housing construction, electrification, and community infrastructure projects. If the status quo is maintained customers in Sheshatshiu and North West River served by Line 7 in the Happy Valley Distribution System will experience reduced reliability due to overloaded equipment.

The scope of this project will involve replacing two sets of 200 A voltage regulators with 300 A voltage regulators. The total projected capital cost for this proposed project is $617,600 with an expected completion date of September 2021.

Contents

Executive Summary i
1.0 Introduction 1
2.0 Background 1
2.1 Existing System 1
2.2 Operating Experience – Historical Load Growth 3
2.3 Load Forecast 4
3.0 Justification 5
4.0 Analysis 5
4.1 Identification of Alternatives 5
4.2 Evaluation of Alternatives 6
4.2.1 Alternative 1: Deferral 6
4.2.2 Alternative 2: Upgrade Existing Voltage Regulators HV7-VR3 and HV7-VR1 6
4.2.3 Alternative 3: Construct a New Distribution Line to Sheshatshiu and North West River 6
4.3 Recommended Alternative 7
5.0 Project Description 7
6.0 Conclusion 8

1.0 Introduction

As new customers are added to distribution systems and existing customers use more electrical power, both the peak demand and energy requirements of communities grow. This growth can cause components of the distribution system, such as reclosers, voltage regulators, and conductors, to become overloaded, or cause voltage conditions that reduce the system's power quality.

Overloaded equipment is at a higher risk of failure. Failure of distribution system equipment typically results in a power outage until the device can be temporarily by-passed, replaced, or repaired.

When equipment overload conditions or power quality issues are identified, sometimes the only method to eliminate the overload condition or power quality issue is to increase the capacity of the distribution system by upgrading or adding new infrastructure, or by reconfiguring the system.

This report presents the assessment and proposed 2021 upgrade of two overloaded voltage regulators on the Happy Valley Distribution System Line 7.

2.0 Background

2.1 Existing System

The Happy Valley Distribution System provides electricity to the communities of Happy Valley-Goose Bay, North West River, Sheshatshiu, and Mud Lake. This system is supplied with power from a transmission line and a gas turbine. The Happy Valley Distribution System contains 1 terminal station, 2 substations and 14 distribution feeders.

The focus of this project is on Line 7, which originates at the Happy Valley Terminal Station and supplies power to the communities of Sheshatshiu and North West River, as well as a large commercial customer in Happy Valley-Goose Bay.[1] This distribution line is 41 km long, operates at 25 kV, and serves approximately 785 domestic and 158 general service customers, most of which are located in Sheshatshiu and North West River. The main trunk portion of this line is comprised of 9.5 km of 477 ASC conductor and 31.1 km of 4/0 AASC primary, with three sets of voltage regulators to maintain adequate

[1] This large commercial customer is near the beginning of this feeder and has no impact of the voltage regulator loading and negligible impact of the voltage drop on the feeder.

voltage over the long distance. The layout of the distribution system and regulators as well as the expected area of load growth can be seen in Figure 1.

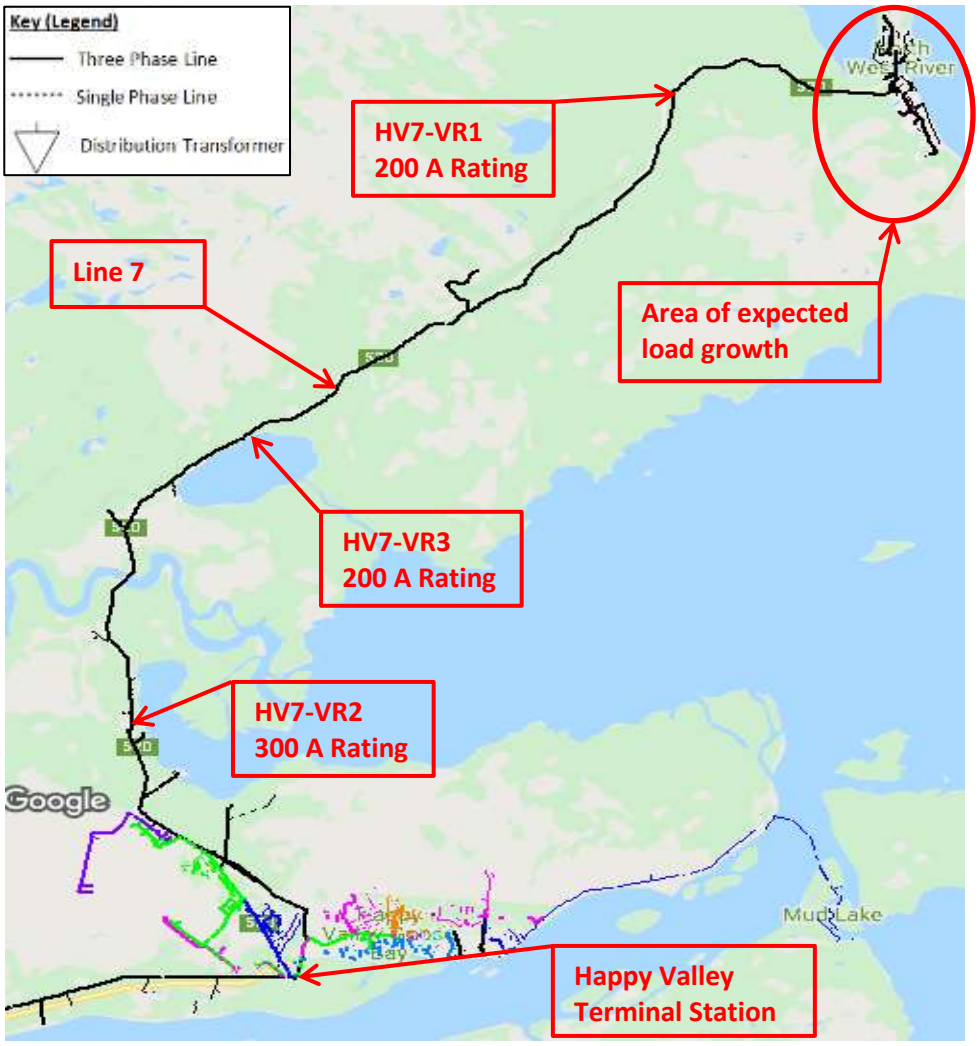

Figure 1: Layout of Happy Valley Line 7

Power delivery on long heavily loaded distribution lines is constrained by the large amount of voltage drop that occurs over the long distance. This voltage drop increases as the load on the line increases. To compensate for this Hydro installs voltage regulators that can boost the line voltage up to an acceptable level and increase the amount of load that can be supplied. As both Sheshatshiu and North West River are located at the end of Line 7 multiple points of voltage regulation are required to maintain acceptable voltage levels. Voltage regulation for Line 7 is provided at the Happy Valley Terminal Station and voltage regulators HV7-VR2, HV7-VR3, and HV7-VR1 located along the feeder as indicated in Figure 1. Figure 2 shows a picture of a typical set of 200 A voltage regulators used by Hydro.



Figure 2: Typical Hydro 200 A Voltage Regulator Bank

Analysis has indicated that due to the recent load growth in Sheshatshiu and North West River, voltage regulators HV7-VR3 and HV7-VR1 are operating above their planning rating.[2] To ensure reliable distribution system operation past 2021, Hydro proposes to replace these voltage regulators to address the situation.

2.2 Operating Experience – Historical Load Growth

The Happy Valley Distribution System Line 7 is a winter peaking system that has experienced steady growth in peak load for the past five years.

Historical Peak Load in Sheshatshiu and North West River is not available on an annual basis. Instead, peak load information is collected by installing temporary meters when required. The peak load for the entirety of Line 7 is recorded at the Happy Valley Terminal Station and has shown steady load growth. The most recent yearly peak load recordings for Line 7 are included in Table 1.

[2] Hydro became aware of the voltage regulators overload during 2019, but due to short-term overload tolerances, and cold temperatures during system peak it was deemed acceptable to wait until 2021 to replace these devices, instead of seeking capital approval to complete this work in 2020.

Table 1: Happy Valley Line 7 EMS Yearly Peak Recording[3]

Year	Date	Current (Amps)			MW
		A Phase	B Phase	C Phase	
2019	21-Feb-2020 9:30 AM	259	249	225	10.69
2018	20-Jan-2019 9:00 AM	253	219	216	9.91
2017	15-Jan-2018 9:15 AM	221	203	202	9.20

2.3 Load Forecast

The 2019 20-year peak load forecast for Happy Valley Line 7 is presented in Table 2.

Table 2: Happy Valley Line 7
20-Year Peak Load Forecast Estimate[4]

Year	Gross Peak Forecast (kW)	Year	Gross Peak Forecast (kW)
2019	9,413	2030	10,347
2020	9,699	2031	10,423
2021	9,734	2032	10,499
2022	9,768	2033	10,567
2023	9,801	2034	10,633
2024	9,855	2035	10,699
2025	9,917	2036	10,765
2026	10,022	2037	10,831
2027	10,108	2038	10,890
2028	10,193	2039	10,946
2029	10,271		

The Happy Valley Distribution System contains a large number of distribution feeders, which all peak at different times and experience varying amounts of load growth. This project is based specifically on the recent and expected concentrated growth occurring in North West River and Sheshatshiu. In this area

[3] Before 2017 Happy Valley Line 7 served the Industrial park as well as North West River and Sheshatshiu. Therefore, only the readings since 2017 were included in the table as they represent the current load served by the line.
[4] This forecast estimate was created using the Happy Valley System Forecast and multiplying it by the average load contribution of Line 7 to the system peak.

Hydro has received three commercial service requests in the last year alone, ranging from 80 kW to 350 kW, and the residential load is increasing due to new housing starts. The extra capacity provided by this project is necessary to serve the current and future load while complying with Hydro's Distribution Planning Criteria.

3.0 Justification

This project is justified on the requirement to meet the growing electricity needs of Hydro's customers on Line 7 of the Happy Valley Distribution System, while ensuring reliable operation of distribution equipment and adherence to Hydro's Distribution Planning Criteria.

4.0 Analysis

4.1 Identification of Alternatives

Whenever equipment rating or distribution planning criteria violations are forecasted to occur on a distribution system, Hydro investigates various technical options to prevent the violations from occurring. The common technical options studied by Hydro are:

- Load transfers;
- Single-phase to three-phase line conversion;
- Installation of voltage regulators;
- Replace existing equipment with equipment that has higher ratings;
- Increase conductor size (reconductor);
- Voltage conversion;
- Relocate equipment; and
- Construct new distribution feeder.

The common technical options were considered for this project, resulting in two technically viable alternatives to address the overload on the existing regulators: either replace existing equipment with equipment that has higher ratings, or construct a new distribution feeder.

4.2 Evaluation of Alternatives

Hydro evaluated the following alternatives for this project:

- Deferral;
- Upgrade Existing Voltage Regulators HV7-VR3 and HV7-VR1; and
- Construct a New Distribution Line to Sheshatshiu and North West River.

4.2.1 Alternative 1: Deferral

Hydro is in violation of its Distribution Planning Criteria during periods of high demand and is not able to defer this project while maintaining that criteria. Deferral of this project will result in an increased risk of equipment failure and damage to customer equipment. Accepting an increased risk of failure by not increasing line capacity in 2021 could result in a sustained outage to the customers in Northwest River and Sheshatshiu that may require an emergency replacement of the regulator. If a regulator fails without causing an outage, customer equipment could be damaged as a result of extreme high or low voltages. Deferring the project could also impact new customer requests for service due to a further increase the risk of equipment failure.

4.2.2 Alternative 2: Upgrade Existing Voltage Regulators HV7-VR3 and HV7-VR1

This alternative involves replacing the two remaining 200 A voltage regulator banks HV7-VR3 and HV7-VR2 with 300 A voltage regulators. This project will add approximately 3,000 kW of capacity to Line 7 before the voltage regulation limits of the regulators are reached. Based on the current load growth expectations this excess capacity will be able to support the growing load for at least the next 10 years. The capital cost to upgrade both sets of voltage regulators is $617,600.

4.2.3 Alternative 3: Construct a New Distribution Line to Sheshatshiu and North West River

This alternative involves constructing a second 41 km distribution line with 477 ASC primary and 4/0 AASC neutral to serve Sheshatshiu and North West River. This second line would require two 300 A regulators to maintain voltages within Hydro's Distribution Planning Criteria. This second line would provide approximately 8,000 kW of capacity to the area and in the future a third regulator could be added to boost the capacity up to 12,000 kW if needed. The capital cost to construct this new line including the installation of two new regulators is $7,378,700.

4.3 Recommended Alternative

Hydro recommends alternative 2, upgrading the existing voltage regulators from 200 A to 300 A, as the most cost effective way to address the overload on the equipment and serve the growing demand. Results of a sensitivity analysis has shown that as long as a second distribution line is not needed until 2024 or later, the least cost alternative is to upgrade the regulators and defer the second line. Based on the current load growth expectations a second distribution line is not expected to be required until at least 2030.

5.0 Project Description

The project being proposed for Line 7 of the Happy Valley Distribution System includes removal and replacement of the existing 200 A voltage regulator banks, HV7-VR3 and HV7-VR1, with 300 A voltage regulator banks. The project estimate is shown in Table 3.

Table 3: Project Estimate ($000)

Project Cost	2021	2022	Beyond	Total
Material Supply	301.5	0.0	0.0	**301.5**
Labour	120.3	0.0	0.0	**120.3**
Consultant	0.0	0.0	0.0	**0.0**
Contract Work	100.0	0.0	0.0	**100.0**
Other Direct Costs	13.1	0.0	0.0	**13.1**
Interest and Escalation	29.2	0.0	0.0	**29.2**
Contingency	53.5	0.0	0.0	**53.5**
Total	**617.6**	**0.0**	**0.0**	**617.6**

The anticipated project schedule is shown in Table 4.

Table 4: Project Schedule

Activity	Start Date	End Date
Planning:		
Project start-up	February 2021	February 2021
Design:		
Engineering/field assessment/contract administration	February 2021	July 2021
Procurement:		
Materials procurement	March 2021	June 2021
Construction:		
Monitor construction activities	July 2021	July 2021
Commissioning:		
Inspection performed by local operations crews	August 1 2021	August 2021
Closeout:		
Project closeout	August 2021	September 2021

6.0 Conclusion

Two sets of voltage regulators on the Happy Valley Distribution System Line 7 are loaded above planning ratings during peak loading, violating Hydro's Distribution Planning Criteria. Hydro's load forecast for the area also shows increasing customer demand. While a new distribution line may be required in the future, the least cost, technically viable solution is to replace the existing regulators with ones that have higher ratings in 2021. The total estimated cost of this project is $617,600.

18. Labrador City L22 Voltage Conversion



2021 Capital Budget Application

Labrador City L22 Voltage Conversion

July 2020

A report to the Board of Commissioners of Public Utilities

newfoundland labrador hydro
a nalcor energy company

Executive Summary

The Cooper Hill Substation, located in Labrador City, supplies 4.16 kV power via distribution line 22 ("L22") which services the Labrador Mall and approximately 35 residential customers. L22 is the only distribution line originating from the Cooper Hill Substation, where the voltage is stepped down through transformer T1 from 46 kV to 4.16 kV. In the event of a failure of Cooper Hill T1it is estimated that restoration of L22 would take approximately one week.

Hydro considered a number of alternatives to eliminate the risk of a loss of supply associated with the failure of Cooper Hill T1 and determined the most efficient and economical alternative is to convert L22 to a 25 kV line with pad-mounted transformers and connect it to a distribution line originating in the Vanier Substation, also located in Labrador City. This will also eliminate the need for the Cooper Hill Substation and additional 4.16 KV spares.

The estimated cost for this project is $593,600. It is scheduled to be complete in 2021.

Contents

Executive Summary i
1.0 Introduction 1
2.0 Background 1
2.1 Existing System 1
2.2 Operating Experience 2
3.0 Justification 2
4.0 Analysis 3
4.1 Identification of Alternatives 3
4.2 Evaluation of Alternatives 3
4.2.1 Alternative 1: Relocate Vanier Substation Transformer and Install in Cooper Hill Substation 3
4.2.2 Alternative 2: Convert L22 from 4.16 kV to 25 kV and Install 25 kV Pad-Mounted Transformers to Service the Labrador Mall 4
4.2.3 Alternative 3: Convert L22 from 4.16 kV to 25 kV and Install Platform Mounted Stepdown Transformer Banks to Service the Labrador Mall 4
4.2.4 Alternative 4: Deferral 4
4.3 Recommended Alternative 4
5.0 Project Description 5
6.0 Conclusion 6

1.0 Introduction

The Cooper Hill Substation, located in Labrador City, supplies 4.16 kV power via L22 which services the Labrador Mall and approximately 35 residential customers. L22 is the only distribution line originating from the Cooper Hill Substation, where the voltage is stepped down through transformer T1 from 46 kV to 4.16 kV. In the event of a failure of Cooper Hill T1 it is estimated that restoration of L22 would take approximately one week. Figure 1 provides a single-line drawing of Cooper Hill Substation and L22.

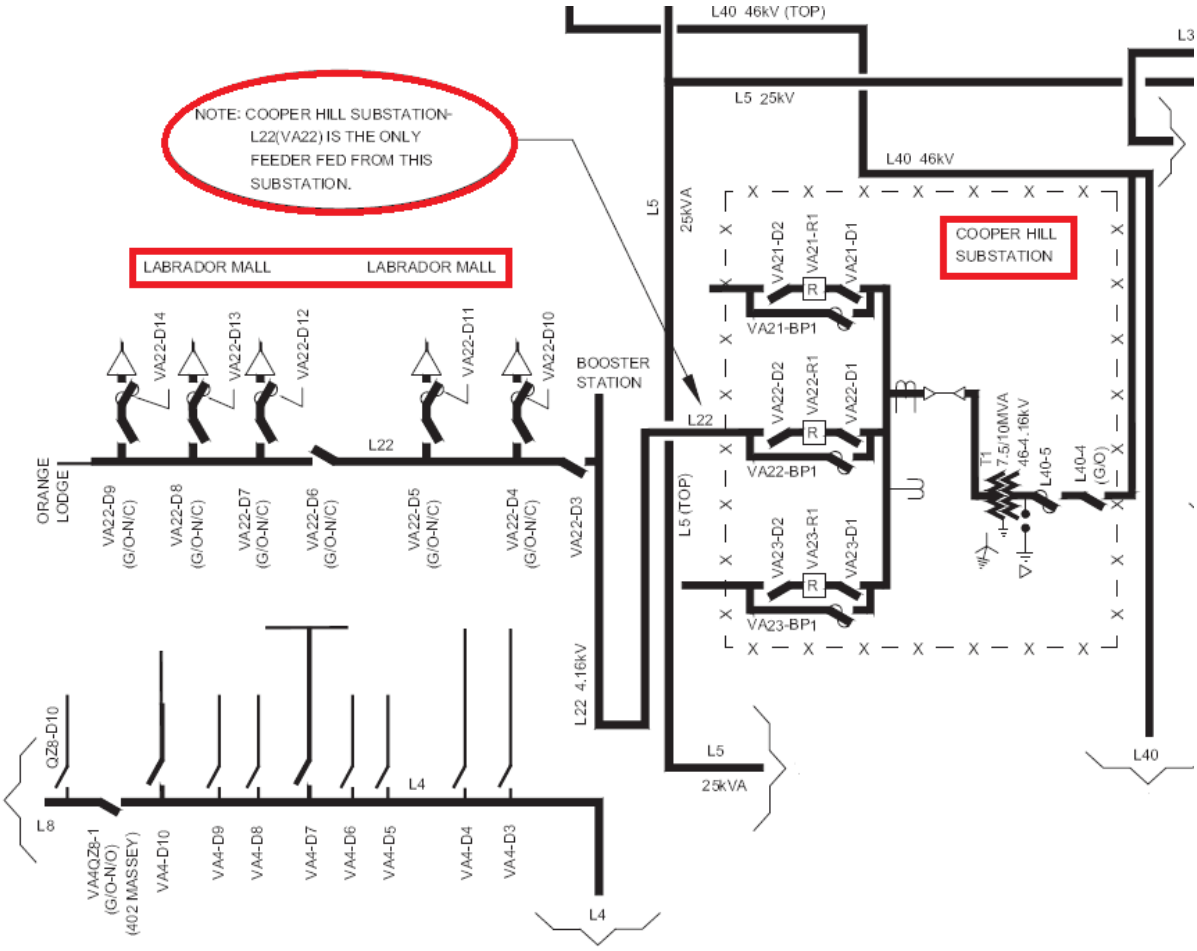

Figure 1: Single-Line Drawing of Cooper Hill Substation and L22

2.0 Background

2.1 Existing System

The Cooper Hill Substation is located in Labrador City and contains one 7.5/10 MVA, 46 kV/4.16 kV transformer, T1. L22 is the only distribution line supplied by Cooper Hill Substation. The Cooper Hill Substation serves the only remaining 4.16 kV loads in Labrador City.

In the existing configuration, there is no online alternative supply transformer in Cooper Hill Substation. In the event of a failure of Cooper Hill T1, the spare transformer that can replace T1 is located in the Vanier Substation. There is no mobile substation located in Labrador to provide a backup supply in the event of a substation transformer failure. Figure 2 shows Cooper Hill Substation T1.



Figure 2: Cooper Hill Substation T1

2.2 Operating Experience

T1 in the Cooper Hill Substation is 43 years old. The most recent preventive maintenance work, carried out in 2014, showed that the transformer was working normally. However, the latest dissolved gas analysis test completed in October 2019 revealed high levels of gassing in the unit. This indicates the presence of an internal hotspot connection on a bushing lead or on the off load tap changer.

3.0 Justification

This project is required to ensure reliable electrical supply to customers presently connected to Cooper Hill Substation. The project will eliminate the risk of an extended outage should Cooper Hill T1 fail.

Cooper Hill T1 is nearing the end of its useful life. When a transformer ages, it typically involves the degradation of its insulation system. This aging process reduces both the mechanical and dielectric strength of the transformer and in turn, its reliability. As noted above, T1 shows signs of deterioration i.e. high levels of gassing in the unit, and is being monitored closely.

Given there is currently no mobile transformer available and there are no spare transformers installed in the substation, there is risk that if the T1 transformer were to fail there would be an extended outage to the customers connected to Cooper Hill.

The Cooper Hill Substation serves the only remaining 4.16 kV loads in Labrador City. As the customers on L22 are supplied at 4.16 kV, if T1 failed, the load cannot be transferred to another substation. To address this issue L22 should be converted to a 25 KV line and connected to a nearest 25 KV distribution line. This will also eliminate the need for the Cooper Hill Substation and additional 4.16 KV spares.

4.0 Analysis

4.1 Identification of Alternatives

Four alternatives were considered.

- Alternative 1: Relocate the Vanier Substation spare transformer and install in Cooper Hill Substation;
- Alternative 2: Convert L22 from 4.16 kV to 25 kV and install 25 kV pad-mounted transformers to service the Labrador Mall;
- Alternative 3: Convert L22 from 4.16 kV to 25 kV and install platform mounted stepdown transformer banks to service the Labrador Mall; and
- Alternative 4: Deferral.

4.2 Evaluation of Alternatives

4.2.1 Alternative 1: Relocate Vanier Substation Transformer and Install in Cooper Hill Substation

This alternative includes relocation of the spare transformer; civil works to accommodate the transformer in Cooper Hill Substation; bus work including wood-pole structures for 46 kV connection;

and procurement and installation of switches and cables to make a standby spare. The estimated cost of this alternative is $731,300.

4.2.2 Alternative 2: Convert L22 from 4.16 kV to 25 kV and Install 25 kV Pad-Mounted Transformers to Service the Labrador Mall

This alternative involves purchasing and installation of five 1 MVA 25 kV/600 V pad-mounted distribution transformers. It also includes purchase of one 1 MVA 25 kV/600 V pad-mounted distribution transformer to serve as a spare. The estimated cost of this alternative is $593,600.

4.2.3 Alternative 3: Convert L22 from 4.16 kV to 25 kV and Install Platform Mounted Stepdown Transformer Banks to Service the Labrador Mall

This alternative involves installing stepdown transformers to service the five 1 MVA pad-mounted transformers which supply the mall. It is required to purchase 15,333 kVA 25/4.16 kV to service the existing 4.16 KV pad mounts and 3, 333 kVA 25/4.16 kV to serve as spares. This alternative also includes installing five platform transformer structures. The estimated cost of this alternative is $672,200.

4.2.4 Alternative 4: Deferral

This alternative involves continued operation of Cooper Hill T1 without a readily available spare transformer. Given the age of the assets and the signs of deterioration being shown on T1, this would present a significant risk to distribution system reliability, which could potentially impact customer service and is, therefore, not recommended.

4.3 Recommended Alternative

As the capital costs of the voltage conversion options (Alternatives 2 and 3) are lower and the maintenance costs associated with maintaining a distribution line are much less than those of maintaining a substation, both voltage conversion options would provide lower overall costs than relocating the Vanier Substation transformer and installing it in Cooper Hill Substation. Continuation of operation of Cooper Hill T1, as noted in the discussion of Alternative 4, presents a significant risk to distribution system reliability and is not recommended.

Converting L22 from 4.16 kV to 25 kV and installing 25 kV pad-mounted transformers to service the Labrador mall is the least-cost of the voltage conversion options; therefore, Hydro is recommending the purchase and installation of five 1 MVA 25 kV/600 V pad-mounted distribution transformers and one 1

MVA 25 kV/600 V pad-mounted distribution transformer to serve as a spare. This alternative will ensure a reliable energy supply is available for the customers serviced by L22.

5.0 Project Description

This project involves the voltage conversion of L22 to 25 kV, and the connection of L22 to a distribution line originating in the Vanier Substation. This will involve the purchase and installation of five 1 MVA 25 kV/600 V pad-mounted distribution transformers and one 1 MVA 25 kV/600 V pad-mounted distribution transformer to serve as a spare.

The estimate for this project is shown in Table 1.

Table 1: Project Estimate ($000)

Project Cost	2021	2022	Beyond	Total
Material Supply	337.0	0.0	0.0	**337.0**
Labour	58.3	0.0	0.0	**58.3**
Consultant	0.0	0.0	0.0	**0.0**
Contract Work	95.0	0.0	0.0	**95.0**
Other Direct Costs	20.0	0.0	0.0	**20.0**
Interest and Escalation	32.3	0.0	0.0	**32.3**
Contingency	51.0	0.0	0.0	**51.0**
Total	**593.6**	**0.0**	**0.0**	**593.6**

The anticipated project schedule is shown in Table 2.

Table 2: Project Schedule

Activity	Start Date	End Date
Planning:		
Resource planning	January 2021	February 2021
Design:		
Conduct site visits, detailed design	January 2021	May 2021
Procurement:		
Materials ordered	January 2021	May 2021
Construction:		
Monitor construction activities	May 2021	August 2021
Commissioning:		
Inspection performed by local operations crews	August 2021	September 2021
Closeout:		
Project closeout	September 2021	November 2021

6.0 Conclusion

Cooper Hill Substation has only one power transformer, T1, supplying the 4.16 kV L22 distribution line. In the event of a failure of Cooper Hill T1, the only spare transformer that can replace T1 is located in the Vanier Substation. It is estimated that restoration of L22 with the spare transformer would take approximately one week. Cooper Hill T1 is nearing the end of its useful life and showing signs of deterioration; its failure presents a significant risk to distribution system reliability, which could potentially impact customer service.

The least-cost alternative to eliminate the risk of a loss of supply from Cooper Hill Substation is to complete a voltage conversion with pad-mounted transformers. The estimated cost of the work is $593,600. This project will ensure reliable energy supply is available for the customers serviced by L22.

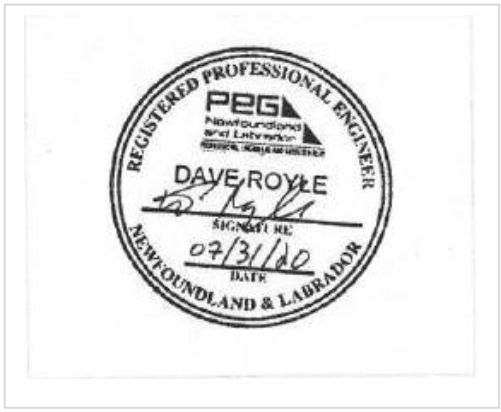

2021 Capital Budget Application

Replace Light-Duty Mobile Equipment

July 2020

A report to the Board of Commissioners of Public Utilities

newfoundland labrador hydro
a nalcor energy company

Executive Summary

Newfoundland and Labrador Hydro (”Hydro”) operates a fleet of light-duty mobile equipment comprised of approximately 120 snowmobiles, 70 ATVs, 120 trailers, and other miscellaneous equipment. The fleet is distributed across Hydro’s operating areas throughout the Province and is utilized on a daily basis to support staff engaged in the maintenance and repair of the electrical system.

This project provides for the replacement of light-duty mobile equipment that meets the established replacement criteria. This project will contribute to the reliable operation of Hydro’s light-duty mobile equipment Fleet.

This project is estimated to cost approximately $549,600 with scheduled completion in 2021.

Contents

Executive Summary i
1.0 Introduction 1
2.0 Background 1
2.1 Existing System 1
2.2 Operating Experience 1
3.0 Justification 2
4.0 Analysis 2
4.1 Identification of Alternatives 2
4.2 Evaluation of Alternatives 3
4.2.1 Alternative 1 3
4.2.2 Alternative 2 3
4.3 Recommended Alternative 3
5.0 Project Description 3
6.0 Conclusion 4

List of Appendices

Appendix A: Light-Duty Mobile Equipment Assets for Replacement

1.0 Introduction

Hydro employees operate in many locations across the province and need reliable light-duty utility equipment to effectively fulfil their duties.

The mobile equipment fleet is strategically distributed across Hydro's operating areas and is utilized on a daily basis by support staff engaged in the maintenance and repair of the electrical system. As equipment ages, it experiences increased downtime that could negatively impact response times for emergency outages or planned maintenance.

In consultation with other utilities involved with the Canadian Utility Fleet Council, Hydro has established its mobile equipment replacement guidelines that consider the age and operating conditions for the equipment. Hydro's replacement criteria are shown in Table 1.

Table 1: Hydro's Replacement Criteria for Mobile Equipment

Equipment	Age (Years)
Snowmobiles/ATVs: Transmission Line Crews	3–5
Snowmobiles/ATVs: Other	5–7
Light-Duty Trailers	6–8
Heavy-Duty Trailers	12–15

2.0 Background

2.1 Existing System

Hydro operates a fleet of light-duty mobile equipment comprised of approximately 120 snowmobiles, 70 ATVs, 120 trailers, and other miscellaneous equipment.

2.2 Operating Experience

As equipment ages, it experiences increased downtime that could negatively impact response times for emergency outages or planned maintenance. In many cases, light-duty equipment is regularly operated under rough conditions and is subject to accelerated wear and tear. Table 2 provides a history of light-duty mobile equipment purchases.

Table 2: Historical Information

Year	Capital Budget ($000)	Actual Expenditures ($000)	Units	Cost per Unit ($000)	Equipment
2020	499.6	TBD	33	Various	10 ATVs 10 Trailers 1 Misc. 12 Snowmobiles
2019	469.6	436.2	35	Various	10 ATVs 8 Trailers 17 Snowmobiles
2018	429.0	416.6	33	Various	16 ATVs 1 Misc. 9 Trailers 7 Snowmobiles
2017	270.9	179.8	24	Various	10 ATVs 1 Misc. 3 Trailers 10 Snowmobiles
2016	348.0	351.4	27	Various	13 ATVs 6 Trailers 8 Snowmobiles

3.0 Justification

This project is necessary to maintain a reliable light-duty equipment fleet. Failure to replace these units will lead to increasing maintenance costs and less reliable equipment. This equipment is often used in remote areas and must be reliable to ensure user safety.

4.0 Analysis

4.1 Identification of Alternatives

Hydro evaluated the following alternatives:

- Alternative 1: Defer replacements; and
- Alternative 2: Replace Identified Equipment.

4.2 Evaluation of Alternatives

4.2.1 Alternative 1

Deferring the purchase of replacement equipment is not viable option for this project. The equipment outlined in this report is required to support remote operations at any time of the year, often during inclement weather conditions. If this equipment fails while personnel are traveling to generating stations or while accessing the transmission or distribution lines then necessary repairs could be delayed leading to failures or extended outages on the electrical grid. The safety of crews working in remote locations is of utmost importance and their equipment must be highly reliable to ensure safe travel and emergency egress.

4.2.2 Alternative 2

When Hydro personnel are utilizing this type of equipment it is typically in remote areas with unreliable communication and during all weather conditions. The reliability of this equipment is critical for the safety of the user to be able to perform their required duties in a timely manner. Line crews in particular regularly travel over rugged terrain with no roads or developed trails.

The development of the replacement criteria with two different classes for snowmobiles and ATVs outlines Hydro's commitment to safety of their workers while providing least cost reliable service to their customers.

4.3 Recommended Alternative

Alternative 2 is Hydro's recommended option. This option follows the replacement criteria detailed in Section 1.0.

5.0 Project Description

This project proposes the replacement of 11 ATVs, 27 snowmobiles, and 10 light-duty trailers in accordance with the replacement criteria provided in Section 1.0.

A detailed listing of the age of the assets being replaced under this project is provided in Appendix A.

The estimate for this project is shown in Table 3.

Table 3: Project Estimate ($000)

Project Cost	2021	2022	Beyond	Total
Material Supply	497.7	0.0	0.0	**497.7**
Labour	0.0	0.0	0.0	**0.0**
Consultant	0.0	0.0	0.0	**0.0**
Contract Work	0.0	0.0	0.0	**0.0**
Other Direct Costs	0.0	0.0	0.0	**0.0**
Interest and Escalation	27.0	0.0	0.0	**27.0**
Contingency	24.9	0.0	0.0	**24.9**
Total	**549.6**	**0.0**	**0.0**	**549.6**

This project is scheduled for completion by December 31, 2021.

6.0 Conclusion

Hydro needs a fleet of reliable light-duty utility equipment to maintain the electrical system. Failure to replace the listed units will lead to increasing maintenance costs and less reliable equipment. The safety of crews working in remote locations is of utmost importance and their equipment must be highly reliable to ensure safe travel and emergency egress.

Appendix A

Light-Duty Mobile Equipment Assets for Replacement

newfoundland labrador hydro
a nalcor energy company

Table A-1: Light-Duty Mobile Equipment Assets for Replacement

Type	Description	Age to Retire	2021 Price	Condition
ATV	V7199, 2010 Outlander	12.1	$8,100	Age/Rough
ATV	V7243, 2011 Polaris 400	10.1	$8,100	Age/Rough
ATV	V7244, 2011 Polaris 400	10.1	$8,100	Age/Rough
ATV	V7291, 2013 Polaris 6x6	8.1	$14,000	Rough
ATV	V7334, 2014 Outlander 800 w/tracks	7.2	$18,000	Rough
ATV	V7337, 2014 Polaris 6x6	7.1	$14,000	Rough
ATV	V7366, 2014 Outlander 6x6	5.2	$14,000	Rough
ATV	V7405, 2016 A. Cat 500	5.2	$8,100	Rough
ATV	V7406, 2016 A. Cat 500	5.2	$8,100	Rough
ATV	V7408, 2016 A. Cat 500	5.2	$8,100	Rough
ATV	V7409, 2016 A. Cat 500	5.2	$8,100	Rough
Snowmobile	V7256, 2012 Tundra R	9.7	$8,000	Age/Rough
Snowmobile	V7259, 2012 Tundra R	9.7	$8,000	Age/Rough
Snowmobile	V7265, 2012 Tundra R	9.7	$8,000	Age/Rough
Snowmobile	V7266, 2012 Tundra R	9.7	$8,000	Age/Rough
Snowmobile	V7303, 2014 Skandic W.T 600	7.8	$9,500	Rough
Snowmobile	V7304, 2014 Skandic W.T 600	7.8	$9,500	Rough
Snowmobile	V7305, 2014 Skandic W.T 600	7.8	$9,500	Rough
Snowmobile	V7306, 2014 Skandic W.T 600	7.8	$9,500	Rough
Snowmobile	V7307, 2014 Skandic W.T 600	7.8	$9,500	Rough
Snowmobile	V7308, 2014 Skandic W.T 600	7.8	$9,500	Rough
Snowmobile	V7309, 2014 Skandic W.T 600	7.8	$9,500	Rough
Snowmobile	V7310. 2014 Skandic W.T 600	7.8	$9,500	Rough
Snowmobile	V7311, 2014 Skandic W.T 600	7.8	$9,500	Rough

Type	Description	Age to Retire	2021 Price	Condition
Snowmobile	V7312, 2014 Skandic W.T 600	7.8	$9,500	Rough
Snowmobile	V7313, 2014 Skandic W.T 600	7.8	$9,500	Rough
Snowmobile	V7324, 2014 Tundra Ace 600	7.8	$8,000	Rough
Snowmobile	V7353, 2014 Skandic W.T 600	6.7	$9,500	Rough
Snowmobile	V7363, 2015 Polaris Indy 550	5.4	$8,000	Rough
Snowmobile	V7379, 2016 Polaris W.T 550	4.8	$8,000	Rough (Replace no Wide Track)
Snowmobile	V7426, 2017 Polaris Indy 550	4.6	$8,000	Rough
Snowmobile	V7427, 2016 Polaris Indy 550	4.8	$8,000	Rough
Snowmobile	V7428, 2016 Polaris Indy 550	4.8	$8,000	Rough
Snowmobile	V7429, 2017 Polaris Indy 550	4.6	$8,000	Rough
Snowmobile	V7430, 2016 Polaris Indy 550	4.8	$8,000	Rough
Snowmobile	V7431, 2016 Polaris Indy 550	4.8	$8,000	Rough
Snowmobile	V7432, 2016 Polaris Indy 550	4.8	$8,000	Rough
Snowmobile	V7433, 2016 Polaris Indy 550	4.8	$8,000	Rough
Light-Duty Trailer	V8884, 2007 Frenchy open	12.7	$14,000	Age/Corrosion
Light-Duty Trailer	V8904, 2010 Kargomax 16’	11.1	$16,000	Age/Corrosion
Light-Duty Trailer	V8930, 2011 Kargomax 12’	9.8	$14,000	Age/Corrosion
Light-Duty Trailer	V8933, 2010 Kargomax 12’	9.7	$14,000	Age/Corrosion
Light-Duty Trailer	V8934, 2011 Kargomax 12’	9.7	$14,000	Age/Corrosion
Light-Duty Trailer	V8936, 2011 Kargomax 12’	9.7	$14,000	Age/Corrosion
Light-Duty Trailer	V8938, 2011 Kargomax 12’	9.7	$14,000	Age/Corrosion
Light-Duty Trailer	V8939, 2011 Kargomax 12’	9.7	$14,000	Age/Corrosion
Light-Duty Trailer	V8959, 2012 Kargomax 12’	8.9	$14,000	Age/Corrosion
Medium-Duty Trailer	V8974, 2015 M.T.I 22’	6.8	$19,000	Condition

20. Inspect Fuel Storage Tanks
- Postville



2021 Capital Budget Application

Inspect Fuel Storage Tanks

Postville

July 2020

A report to the Board of Commissioners of Public Utilities

newfoundland labrador hydro
a nalcor energy company

Executive Summary

Newfoundland and Labrador Hydro ("Hydro") owns and operates 98 above-ground storage tanks comprised of 74 horizontal tanks and 24 vertical tanks. Approximately 75% of the tanks store diesel fuel, 10% store waste oil, 10% store transformer oil, and the remaining 5% store Jet A1 fuel, lube oil, or glycol.

To maximize the service life of its assets, and satisfy regulatory requirements, Hydro has formalized its tank inspections into a coordinated program. The program uses the tank inspection procedures outlined by The American Petroleum Institute ("API") and the Underwriters' Laboratories of Canada ("ULC") as the basis for setting the inspection intervals.

The scope of work for this project involves the completion of internal tank inspections for two 319,000 liter vertical diesel fuel storage tanks at Hydro's Postville Diesel Generating Station ("Postville DGS"). The inspection of the tanks will serve to identify necessary refurbishment, which will be completed as part of this project, and collect data that will be used to forecast the remaining service life of the assets.

This is a single-year project with an estimated cost of $532,600.

Contents

Executive Summary i
1.0 Introduction 1
2.0 Background 1
2.1 Existing System 1
2.2 Operating Experience 1
3.0 Justification 1
4.0 Analysis 2
4.1 Identification of Alternatives 2
4.2 Evaluation of Alternatives 2
4.2.1 4.2.1 Deferral 2
4.2.2 4.2.2 Complete Internal Tank Inspection 2
4.3 Recommended Alternative 2
5.0 Project Description 3
6.0 Conclusion 4

List of Appendices

Appendix A: Fuel Storage Tank Inspection Plan

1.0 Introduction

To comply with regulatory requirements, maximize the service life of its assets, and adhere to its Environmental Policy and Guiding Principles, Hydro has formalized its tank inspections into a coordinated program (see Appendix A). The program uses the tank inspection guidelines outlined by API and ULC as the basis for setting the inspection intervals.

In 2021, Hydro proposes to carry out internal inspections of its diesel fuel storage tanks in Postville, Labrador. The inspection will ensure regulatory compliance, enable deficiencies to be identified and addressed, and ensure that the tanks are structurally sound, suitable for operation, and not at risk of releasing fuel into the environment.

2.0 Background

2.1 Existing System

Hydro owns and operates two 319,000 liter, vertical fuel storage tanks at its Postville DGS. The tanks were constructed in 2011 and provide the bulk fuel storage capacity required to ensure continuity of fuel supply for the generating units.

2.2 Operating Experience

Operation of the diesel generating station in Postville is governed by the Department of Municipal Affairs and Environment. Pursuant to the *Environmental Protection Act, SNL 2002 c E-14.2 Section 83*, Hydro must apply for and obtain a "Certificate of Approval" from the Department to operate the plant. The Terms and Conditions outlined in the certificate state that, "all tanks and fuel delivery systems shall be inspected to the appropriate API or ULC standards."

The fuel storage tanks in Postville have been in service for ten years and have performed well to date. In accordance with API standards Section 6.4.2.1., "The interval from initial service until the initial internal inspection shall not exceed 10 years." The Postville TGS tanks are due for their initial internal inspection in 2021.

3.0 Justification

To satisfy the operating terms and conditions outlined by the Department of Municipal Affairs and Environment, Hydro must ensure that its fuel storage tanks are inspected pursuant to the relevant API

standard and maintained in a reliable operating condition. During the tank inspection Hydro will determine and complete any required work to ensure the tank complies with operational standards and collect data that will be used to forecast the remaining service life of the assets.

4.0 Analysis

4.1 Identification of Alternatives

Hydro evaluated the following alternatives:

- Alternative 1: Deferral of the tank inspections; and
- Alternative 2: Complete internal tank inspections in accordance with the Tank Inspection Plan.

4.2 Evaluation of Alternatives

4.2.1 4.2.1 Deferral

Under this alternative, internal tank inspections would be deferred until 2022. The tanks for the Postville DGS were placed in service in 2011 and are due for their initial ten-year internal inspection. Deferral of the internal inspections would violate the operating terms and conditions as required by the provincial regulatory body.

4.2.2 4.2.2 Complete Internal Tank Inspection

This alternative will see the completion of the tank inspections as outlined in Hydro's Tank Inspection Plan. Inspection of the bulk fuel storage tanks is an operating requirement of the Department of Municipal Affairs and Environment. API Standard 653 outlines the requirements for tank inspection, repair, alteration, and reconstruction of vertical, steel storage tanks. Section 6.4.2.1 of this standard states that, "The interval from initial service until the internal inspection shall not exceed 10 years." As the tanks for the Postville DGS will reach their ten-year service life in 2021, they are required to undergo an internal inspection.

4.3 Recommended Alternative

To comply with the operating requirements outlined on the Certificate of Approval, and maximize asset service life, Alternative 2 was selected.

The bulk fuel storage tanks are essential to ensuring the supply of power to the community of Postville. Internal tank inspections serve to identify required refurbishments to ensure that the tanks remain fit

for service and extend the service life of the asset. Therefore, Hydro proposes to complete the planned internal inspection of the Postville DGS tanks in 2021.

5.0 Project Description

The scope of work for this project involves the completion of internal tank inspections of two 319,000 liter vertical fuel storage tanks at the Postville DGS and, where applicable, the completion of any required work identified during the inspection.

The project scope includes:

- Draining and cleaning of the tank in preparation for the inspection;
- Comprehensive inspection of all accessible tank components;
- Ultrasonic thickness surveys of the floor, shell, roof, and nozzles;
- Implementation of temporary site storage, where required; and
- Completion of the routine upgrades identified during the inspection.

Required upgrade costs have been included based on expected condition from similar tank inspections in the past.

The project estimate is shown in Table 1.

Table 1: Project Estimate ($000)

Project Cost	2021	2022	Beyond	Total
Material Supply	0.0	0.0	0.0	**0.0**
Labour	86.8	0.0	0.0	**86.8**
Consultant	45.0	0.0	0.0	**45.0**
Contract Work	324.6	0.0	0.0	**324.6**
Other Direct Costs	6.8	0.0	0.0	**6.8**
Interest and Escalation	23.1	0.0	0.0	**23.1**
Contingency	46.3	0.0	0.0	**46.3**
Total	**532.6**	**0.0**	**0.0**	**532.6**

The anticipated project schedule is shown in Table 2.

Table 2: Project Schedule

Activity	Start Date	End Date
Planning:		
Scope statement, schedule, and risk review	February 2021	February 2021
Design:		
Prepare tender package	March 2021	April 2021
Procurement:		
Tender and award	April 2021	May 2021
Construction:		
Complete vertical tank cleaning and inspection	July 2021	August 2021
Commissioning:		
Final inspection and acceptance	August 2021	September 2021
Closeout:		
Project completion, final billing, and lessons learned	September 2021	November 2021

6.0 Conclusion

Inspection of the bulk fuel storage tanks is required to ensure compliance with regulatory requirements, identify necessary maintenance and repair items, and forecast remaining asset service life. The completion of repairs, identified during the inspection, will confirm that the tanks are structurally sound, suitable for operation, and not at risk of releasing fuel into the environment.

Appendix A

Fuel Storage Tank Inspection Plan

newfoundland labrador hydro
a nalcor energy company

Location	Area	Year Fabricated/ Installed	CAP (Litres)*	API 653 (Last Ten Year Initial Internal Inspection Year)	Planned API 653 Internal Inspections (Year)		
Makkovik	TROL	1982/90	68,190	2006	2017	2028	2038
Makkovik	TROL	1982/90	68,190	2006	2017	2028	2038
Makkovik	TROL	1990/90	314,000	2006	2017	2028	2038
Makkovik	TROL	1990/90	314,000	2006	2017	2028	2038
Makkovik	TROL	1990/90	314,000	2006	2017	2028	2038
Black Tickle	TROL	1992/92	257,000	2007	2018	2029	2039
Black Tickle	TROL	1992/92	257,000	2007	2018	2029	2039
Grey River	TROC	1990/90	22,730	2009	2019	2029	2039
Grey River	TROC	1990/90	22,730	2009	2019	2029	2039
Goose Bay, North Plant	TROL	1996	45,400	2010	2020	2030	2040
Goose Bay, North Plant	TROL	1996	45,400	2010	2020	2030	2040
Charlottetown	TRON	1984/84	300,000	2008	2020	2030	2040
Charlottetown	TRON	2001	10,000	-	2020	2030	2040
Postville	TROL	2011	319,000	-	2021	2031	2041
Postville	TROL	2011	319,000	-	2021	2031	2041
Mary's Harbour	TRON	1990/90	314,000	2012	2022	2032	2042
Mary's Harbour	TRON	1990/90	314,000	2012	2022	2032	2042
Stephenville Gt	TROC	1975/2000	501,000	2014	2024	2033	2043
Stephenville Gt	TROC	1975/2000	501,000	2014	2024	2033	2043
Stephenville Gt	TROC	1975/2000	501,000	2014	2024	2033	2043
Mccallum	TROC	1998/98	90,800	2015	2025	2034	2044
Hardwoods Gt	TROC	1976/97	2,273,000	2015	2025	2034	2044
Paradise River	TROL	2005/05	45,400	-	2025	2035	2045
Hopedale	TROL	2005/05	22,700	-	2025	2035	2045
Port Hope Simpson	TRON	1975/75	22,730	2015	2025	2035	2045
Port Hope Simpson	TRON	1995/95	22,730	2015	2025	2035	2045
Rigolet	TROL	1997/97	45,400	2007	2026	2036	2046
Rigolet	TROL	1997/97	45,400	2007	2026	2036	2046
Rigolet	TROL	1998/2000	22,730	2007	2026	2036	2046
Rigolet	TROL	1995/95	90,920	2008	2026	2036	2046
Rigolet	TROL	1983/95	90,900	2008	2026	2036	2046
Rigolet	TROL	1985/85	300,000	2007	2026	2036	2046
Rigolet	TROL	2015/15	400,000	-	2026	2036	2046
Hawkes Bay	TRON	1974/96	23,730	2016	2026	2036	2046
Hawkes Bay	TRON	1996/96	23,730	2016	2026	2036	2046
Goose Bay GT	TROL	1990/1991	54,552	2016	2026	2036	2046
Goose Bay GT	TROL	1990/1991	54,552	2016	2026	2036	2046
Goose Bay GT	TROL	1990/1991	54,552	2016	2026	2036	2046
Norman Bay	TRON	2007	32,400	-	2027	2037	2047
Norman Bay	TRON	2007	32,400	-	2027	2037	2047
Norman Bay	TRON	2011	20,000	-	2027	2037	2047
Nain	TROL	2001/01	45,400	-	2028	2038	2048
Nain	TROL	1974/74	144,140	2002	2028	2038	2048
Nain	TROL	1974/74	144,140	2002	2028	2038	2048
Nain	TROL	1974/74	144,140	2002	2028	2038	2048
Nain	TROL	1987/87	600,000	2006	2028	2038	2048
Cartwright	TROL	2009	46,202	-	2029	2039	2049
St. Lewis	TRON	2012	45,000	-	2032	2042	2052
St. Lewis	TRON	2012	45,000	-	2032	2042	2052
Ramea	TROC	2014/14	30,000		2034	2044	2054
Ramea	TROC	2014/14	30,000		2034	2044	2054
St. Anthony	TRON	2015	22,730	-	2035	2045	2055
St. Anthony	TRON	2015	22,730	-	2035	2045	2055
St. Anthony	TRON	2016	22,730	-	2035	2045	2055
L'Anse Au Loup	TRON	2015	22,730	-	2035	2045	2055
L'Anse Au Loup	TRON	2015	22,730	-	2035	2045	2055
St. Brendans	TROC	2016	22,730	-	2035	2045	2055

21. Upgrade of Worst Performing Distribution Feeders (2021–2022)



2021 Capital Budget Application

Upgrade of Worst Performing Distribution Feeders (2021–2022)

July 2020

A report to the Board of Commissioners of Public Utilities

newfoundland labrador hydro
a nalcor energy company

Executive Summary

Newfoundland and Labrador Hydro ("Hydro") uses two approaches to maintain or improve distribution system reliability performance. One approach is detailed in the Distribution System In-Service Failures, Miscellaneous Upgrades, and Streetlight Modernization Project, (Volume I, Section C), which Hydro uses to address smaller distribution replacements. The other approach is outlined in this document and addresses larger refurbishment requirements. These larger efforts are determined by reliability performance analysis and condition assessments.

This project includes the upgrade of distribution feeders located in the Farewell Head system that have been prioritized through reliability performance analysis and confirmed as requiring upgrades to the existing infrastructure based on a recent condition assessment.

Hydro proposes to undertake the following work:

- Farewell Head Line 4: Replace deteriorated conductor, reroute an off road section and reposition a three-phase voltage regulator bank; and
- Farewell Head Line 5: Replace poles, cribs, and conductor. Install a three-phase sectionalizer and fault circuit indicators.

The estimated project cost is approximately $1,124,500 with planned completion in 2022.

Contents

Executive Summary i
1.0 Introduction 1
2.0 Background 1
2.1 Existing System 2
2.1.1 FHD-L4 Feeder 2
2.1.2 FHD-L5 Feeder 2
2.2 Operating Experience 3
2.2.1 FHD-L4 Feeder 3
2.2.2 FHD-L5 Feeder 3
3.0 Justification 4
3.1.1 FHD-L4 Feeder Condition 4
3.1.2 FHD-L5 Feeder Condition 5
4.0 Analysis 7
4.1 Identification of Alternatives 7
4.2 Evaluation of Alternatives 8
4.2.1 Alternative 1: Replace Deteriorated Feeder Components and Use Non-Deteriorated Components 8
4.2.2 Alternative 2: New Distribution Feeder 8
4.2.3 Alternative 3: Deferral 8
4.3 Recommended Alternative 8
5.0 Project Description 8
5.1 FHD-L4 Feeder: 8
5.2 FHD-L5 Feeder: 9
6.0 Conclusion 10

List of Appendices

Appendix A: Worst-Performing Feeder List and Summary of Data Analysis

1.0 Introduction

Hydro provides service to residents in select rural communities within the province through the use of distribution systems. Each distribution system typically consists of a substation, coupled with wood pole distribution feeder(s) that supply power from the substation to service drops throughout a community. Historically, Hydro used a condition assessment based approach to identify components of its distribution systems which needed to be refurbished to ensure reliable operation. Since 2019, Hydro has also been focusing on refurbishment of distribution feeders which have poor reliability performance and/or which have significant impact on overall distribution system performance. This project includes refurbishment of distribution feeders located in the Farewell Head system that have been prioritized through the examination of reliability performance data and confirmed as requiring upgrades to the existing infrastructure based on recent condition assessments.

2.0 Background

Hydro's distribution feeder upgrades are prioritized based on five-year average reliability indices. Hydro maintains two prioritizing lists; one is based on SAIDI[1] and SAIFI[2] per feeder and the other list is based on CHI[3] (customer-hours of interruption) per feeder.

One of the drawbacks of selecting feeders based on the SAIDI/SAIFI method alone is that it considers the feeder level indices and ignores the impact the feeder has on overall system reliability indices; directing resources to these feeders will not significantly improve the system level statistics. Alternatively, CHI ranks the feeder based on the impact the feeder has on overall reliability indices; directing resources on these feeders will improve the corporate level statistics. However, this method might lead to ignoring the smaller problematic feeders. To overcome this issue, Hydro examines worst performing distribution feeders based on both SAIDI/SAIFI and CHI. The top 25 worst-performing feeders on each list are analyzed to identify the root cause of the poor performance. Where necessary, a feeder assessment is completed; this includes a review of current inspection data, overall system design, work completed on

[1] SAIDI indicates the System Average Interruption Duration Index for customers served per year, or the average length of time a customer is without power in the respective distribution system per year.
[2] SAIFI is the System Average Interruption Frequency Index per year which indicates the average of sustained interruptions per customer served per year, or the average number of power outages a customer has experienced in the respective distribution system per year.
[3] CHI is the sum of the products of the outage duration multiplied by the number of customers affected during the outage for each event within a one-year period.

past capital projects, and a site visit to confirm data collected. Once the assessment is completed, Hydro will only propose specific capital work that can improve the reliability of the distribution feeder and is justified by inspection data. For example, if an issue causing poor performance was due to an isolated incident or was recently addressed by other capital work, Hydro will not take any capital upgrade action and the feeder is identified for continued monitoring.

The 2021–2022 Upgrade of Worst Performing Distribution Feeders project will involve work on two of the worst performing distribution feeders: Farewell Head Line 4 (FHD-L4), and Farewell Head Line 5 (FHD-L5). FHD-L4 is included on both the SAIDI/SAIFI and CHI lists and FHD-L5 exists on the CHI list. Both feeders have also been identified as requiring upgrades based on an assessment of their condition.

2.1 Existing System

2.1.1 FHD-L4 Feeder

FDH-L4 is a three phase, 12.5 KV distribution feeder that originates from the Fogo Island Substation and was originally constructed in 1960's. The feeder extends from the substation to the community of Fogo, servicing a total of 412 customers. The first 3.5 km of the feeder follows Route 333 and the remaining 2.0 km is off-road.

The primary line of the FHD-L4 feeder consists of portions of #2 ACSR conductor, which is non-standard and prone to failure.

Hydro notes that in 2019, it completed a project to replace copper conductor within the community of Fogo as part of the 2018–2019 Distribution Upgrades project. The 2021–2022 Upgrade of Worst Performing Distribution Feeders project will replace the remaining #2 ACSR conductor in the system which is impacting reliability.

2.1.2 FHD-L5 Feeder

FHD-L5 is another three-phase, 12.5 KV feeder originating from the Fogo Island Substation. It was originally constructed in the 1960's and services 656 customers. This feeder has approximately 12.7 km of three-phase primary line with a 7.3 km single phase tap. The three-phase line provides power to the communities of Shoal Bay, Barr'd Island, and Joe Batt's Arm. The single-phase tap provides power to the communities of Sandy Cove and Tilting. This feeder has approximately 8 km of single-phase line

consisting of #2 ACSR non-standard conductor. A recent inspection of this feeder has identified approximately 20 deteriorated poles and 4 cribs which require replacement.

2.2 Operating Experience

2.2.1 FHD-L4 Feeder

The reliability experienced by the customers serviced by this feeder has been impacted by several broken primary conductor incidents in recent years. There are a number of locations in the #2 ACSR conductor section where the primary conductor has failed, resulting in power outages. Table 1 represents the reliability data for FHD-L4 and provides a comparison to the Hydro average. This feeder has performed poorly compared to the Hydro average indices.

Table 1: Five-Year Average Reliability Data for FHD-L4 (2015–2019)

Location	SAIDI	SAIFI	CHI
FHD-L4	9.08	3.14	3,715
Hydro Average[4]	4.15	1.69	1,109

2.2.2 FHD-L5 Feeder

This feeder has been experiencing power outages mainly due to equipment failures. Deteriorated poles, broken line hardware and damaged conductors are the primary causes of outages in recent years. Table 2 represents the reliability data for FHD-L5 and provides a comparison to the Hydro average. Although SAIDI and SAIFI for this feeder are close to the Hydro average, the CHI value is significantly greater than the Hydro average CHI and the upgrade of this feeder has been prioritized accordingly. FHD-L5 provides power to a large group of customers and a single outage negatively impacts Hydro's overall average for SAIDI and SAIFI.

Table 2: Five-Year Average Reliability Data for FHD-L5 (2015–2019)

Location	SAIDI	SAIFI	CHI
FHD-L5	4.09	1.62	2,678
Hydro Average	4.15	1.69	1,109

[4] Hydro Average CHI represents the average number of Customer Hours of Interruption per feeder. It is calculated by dividing the number of total customer-outage-hours by the number of distribution feeders.

3.0 Justification

This project is justified based on the reliability performance of the distribution feeders FHD-L4 and FHD-L5 and the current condition of the assets.

3.1.1 FHD-L4 Feeder Condition

This feeder has approximately 5 km of three-phase line consisting of #2 ACSR conductor. ACSR conductor is not recommended for salt water environments because of the potential for excessive corrosion. Failure of the primary conductor due to corrosion has been an issue over the past number of years and there are multiple inline splice repairs in this section.

Of the 5 km of three-phase line, a 2 km section is located off-road (Figure 1) and has rough access which greatly increases the time necessary for response and outage duration. There are a total of 41 poles in this section and more than 50% of these poles are over 50 years old. Due to the age and condition of the structures and conductor, this section is becoming more prone to damage when exposed to heavy wind, ice and snow loading. The three-phase voltage regulator bank is presently well removed from the community and would be more effective and would improve supply voltage level if located upstream of the first customer in the community.

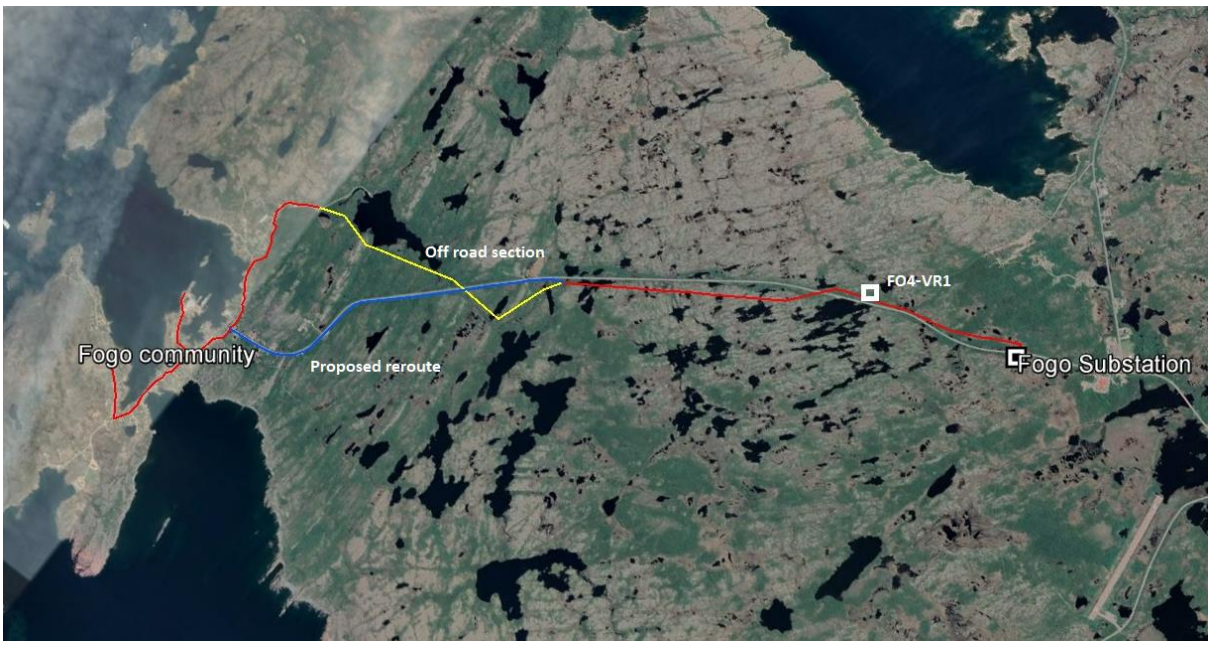

Figure 1: FHD-L4 Reroute

3.1.2 FHD-L5 Feeder Condition

From the recent pole line inspection record, this feeder has several deteriorated poles (Figure 2) and cribs as well as approximately eight km of single phase line consisting of #2 ACSR conductor which needs to be replaced (Figure 3). This distribution feeder was originally constructed over 50 years ago. The line components, still in operation, were installed at the time of original construction. The deterioration of the components creates a risk of line component failure and they are planned for replacement.FHD-L5 is a long radial feeder with more than 650 customers. At the beginning of this feeder a three phase recloser is installed; the next single phase recloser is approximately 11.5 km away. Most of the customer load is between these two reclosers. When a fault occurs between these two reclosers, the substation recloser operates and locks out, resulting in an outage to all the customers of FHD-L5. As a result the CHI value of this feeder increases. To minimize this effect an automated sectionalizer is proposed for installation. Figure 4 provides the proposed location of the sectionalizer. This will reduce the number of affected customers and improve the power restoration time in the event of a fault downstream of the new sectionalizer. In addition to the sectionalizer, Fault Circuit Indicators are proposed for installation on this long radial circuit to minimize power outage durations. This will also improve the power restoration time by allowing crews to locate faults and isolate faulted sections faster.

The main trunk feeder has several three phase taps without any fuse protection. Installation of fuse disconnect switches will help to isolate any local faults on these taps and reduce number of affected customers.



Figure 2: Deteriorated Pole

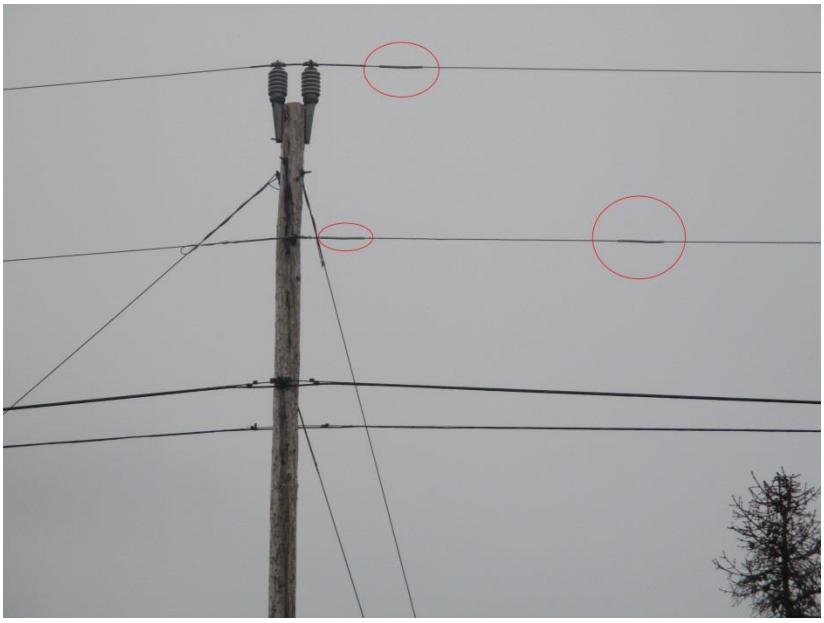

Figure 3: Deteriorated Conductor with Multiple Sleeves

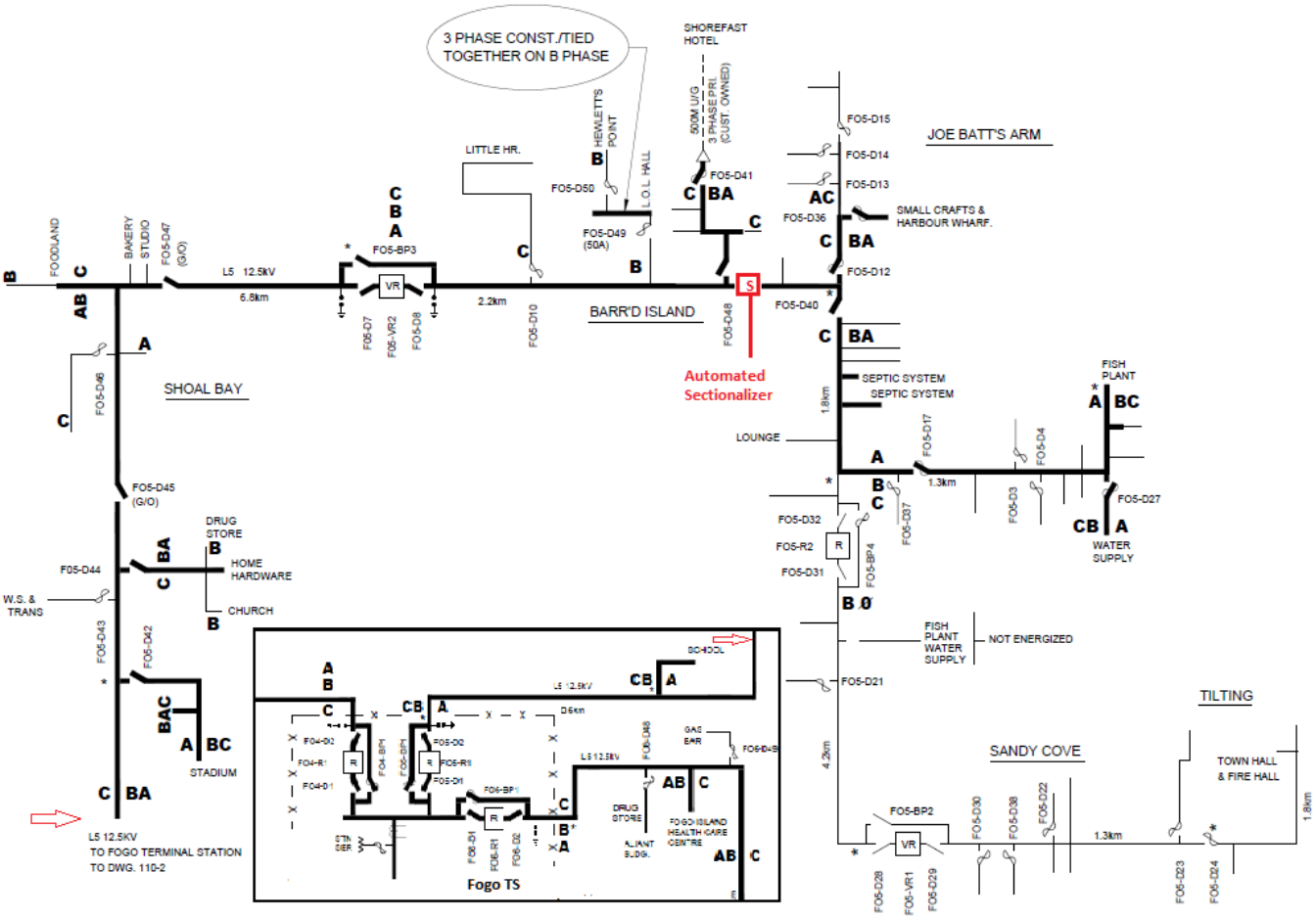

Figure 4: FHD-L5: Proposed Automated Sectionalizer Location

4.0 Analysis

4.1 Identification of Alternatives

Hydro evaluated the following alternatives for each feeder:

- Alternative 1: Replacing deteriorated feeder components only;
- Alternative 2: Construction of an entirely new distribution feeder; and
- Alternative 3: Deferral.

4.2 Evaluation of Alternatives

4.2.1 Alternative 1: Replace Deteriorated Feeder Components and Use Non-Deteriorated Components

Replacing deteriorated feeder components reduces the chance of outages due to deteriorated components. Continuing to utilize the existing non-deteriorated feeder components means Hydro would not incur the cost to replace feeder components before end of life. Other proposed upgrades to address specific issues (e.g., reroute a section of FHD-L4, installation of a sectionalizer in FHD-L5) will also improve the reliability.

4.2.2 Alternative 2: New Distribution Feeder

This alternative involves the complete replacement of the existing feeders. There are existing feeder components that are still operable such as poles, conductor, insulators, and cross arms, and the construction of an entirely new feeder would lose the benefit of this existing and functional equipment. This alternative requires spending that is unnecessary for the continuation of reliable provision of electricity.

4.2.3 Alternative 3: Deferral

If the required upgrading work is deferred to a future year it would create a growing backlog of deficiencies that would have a negative impact on future costs and present an increased risk to distribution system reliability, which would potentially impact customer service. Deferral is not recommended.

4.3 Recommended Alternative

Based on the evaluation of the alternatives described in Section 4.2, Hydro is recommending Alternative 1 for FHD-L4 and FHD-L5 since it is the most efficient and economical and consistent with the provision of least-cost reliable service.

5.0 Project Description

An overview of the work to be completed in this project is as follows:

5.1 FHD-L4 Feeder:

- Replace sections of deteriorated conductor, approximately 3 km;

- Reroute approximately 2 km off road section; and
- Reposition three-phase Voltage Regulator Bank, FO4-VR1.

5.2 FHD-L5 Feeder:

- Replace 20 deteriorated poles, 4 cribs and associated hardware;
- Replace approximately 8 km of deteriorated conductor;
- Install a three-phase sectionalizer; and
- Install Fault Circuit Indicators.

The estimate for this project is shown in Table 4.

Table 4: Project Estimate ($000)

Project Cost	2021	2022	Beyond	Total
Material Supply	208.8	51.2	0.0	**260.0**
Labour	56.3	116.4	0.0	**172.7**
Consultant	0.0	0.0	0.0	**0.0**
Contract Work	0.0	463.0	0.0	**463.0**
Other Direct Costs	13.2	40.6	0.0	**53.8**
Interest and Escalation	12.8	67.3	0.0	**80.1**
Contingency	27.8	67.1	0.0	**94.9**
Total	**318.9**	**805.6**	**0.0**	**1,124.5**

The anticipated project schedule is shown in Table 5.

Table 5: Project Schedule

Activity	Start Date	End Date
Planning:		
Resource planning	January 2021	January 2022
Design:		
Conduct site visits, detailed design	January 2021	October 2021
Procurement:		
Materials ordered	November 2021	March 2022
Construction:		
Construction	May 2022	September2022
Closeout:		
Project closeout	September 2022	November 2022

6.0 Conclusion

Hydro executes larger feeder refurbishment and replacement projects to maintain or improve distribution system reliability performance. These larger upgrade projects are e selected through reliability performance analysis and condition assessments.

This project is proposed to improve the reliability of the Farewell Head FHD-L4 and FHD-L5 feeders as well as the overall performance of the distribution systems.

Appendix A

Worst Performing Feeder List and Summary of Data Analysis

newfoundland labrador hydro
a nalcor energy company

Table A-1: Worst Performing Feeders Sorted by SAIDI/SAIFI based Feeder Score[5]

Rank	Feeder	SAIDI	SAIFI	Feeder Score
1	Bottom Waters, Line 1	17.02	4.29	10.65
2	Burgeo, Line 5	18.40	2.59	10.50
3	Barachoix, Line 1	14.22	3.23	8.73
4	Farewell Head, Line 1	14.26	2.30	8.28
5	Barachoix, Line 4	11.15	3.35	7.25
6	Kings Point, Line 2	10.98	3.40	7.19
7	Bottom Waters, Line 7	10.58	3.79	7.18
8	Black Tickle, Line 1	12.37	1.22	6.80
9	Burgeo, Line 1	11.20	2.08	6.64
10	Farewell Head, Line 4	9.08	3.14	6.11
11	Kings Point, Line 1	9.42	2.72	6.07
12	Bottom Waters, Line 3	8.93	2.78	5.85
13	English Harbour, Line 1	7.98	3.46	5.72
14	Fleur-de-Lys, Line 1	9.25	2.11	5.68
15	Bottom Waters, Line 6	8.11	3.08	5.59
16	Roddickton, Line 4	8.83	2.33	5.58
17	L'Anse-Au-Loup, Line 2	6.94	3.94	5.44
18	Main Brook, Line 2	7.89	2.53	5.21
19	Glenbernie, Line 1	8.46	1.94	5.20
20	Happy Valley, Line 7	7.02	3.32	5.17
21	Jackson's Arm, Line 2	8.66	1.49	5.08
22	Barachoix, Line 5	8.80	1.20	5.00
23	Fleur-de-Lys, Line 2	8.02	1.69	4.86
24	Burgeo, Line 4	7.41	1.45	4.43
25	Hawke's Bay, Line 3	5.72	3.13	4.42

[5] Feeder Score= (.5* SAIFI) + (.5*SAIDI)

Table A-2: Worst Performing Feeders Sorted by CHI

Rank	Feeder	CHI
1	Barachoix, Line 4	9,031
2	Barachoix, Line 1	7,565
3	English Harbour, Line 1	6,445
4	Happy Valley, Line 7	6,380
5	Hawke's Bay, Line 3	5,574
6	Bottom Waters, Line 1	5,388
7	Kings Point, Line 1	5,264
8	Bottom Waters, Line 7	4,650
9	L'Anse-Au-Loup, Line 2	4,243
10	Glenbernie, Line 1	4,217
11	Farewell Head, Line 4	3,715
12	Bear Cove, Line 6	3,624
13	South Brook, Line 1	3,246
14	Rocky Harbour, Line 1	2,919
15	Rocky Harbour, Line 2	2,902
16	Roddickton, Line 1	2,839
17	South Brook, Line 5	2,705
18	Farewell Head, Line 5	2,678
19	St. Anthony, Line 3	2,560
20	Jackson's Arm, Line 2	2,547
21	Nain, Line 1	2,530
22	Burgeo, Line 3	2,222
23	Burgeo, Line 2	2,212
24	St. Anthony, Line 1	2,134
25	Farewell Head, Line 6	2,122

Table A-3: Summary of Data Analysis

Feeder	Summary
Barachoix, Line 1	In 2019 a faulty substation recloser impacted the reliability. Overall reliability statistics on this feeder have been impacted by several broken primary conductor incidents during the 2014–2018 period. Work is being carried out on this feeder under the 2019–2020 Distribution System Upgrades project.
Barachoix, Line 4	Overall reliability statistics on this feeder have been impacted by several broken primary conductor incidents, and other defective line hardware incidents during the 2015–2019 period. Work is being carried out on this feeder under the 2019–2020 Distribution System Upgrades project.
Barachoix, Line 5	This feeder is a 2.4 kv tap to Pass Island. This area is extremely remote and it has only two customers. In 2015, poor reliability statistics were driven by a defective transformer. No additional work is required at this time.
Bear Cove, Line 6	Conductor failure and equipment failures are dominating outage causes in recent years. Work is being carried out on this feeder under the 2019–2020 Distribution System Upgrades project.
Black Tickle, Line 1	During the 2015–2019 period the customers of this feeder experienced power outage due to weather related events or defective line hardware; however, reliability of this feeder was mainly impacted by the remoteness of the site. Power outage was often extended due to remote access.
Bottom Waters, Line 1	Poor reliability statistics were driven by broken insulators and tree related events during the 2015–2019 period. Vegetation issues will be addressed and no additional work is required at this time; however, his feeder will continue to be monitored to determine if it should be considered for upgrading in a future capital budget.
Bottom Waters, Line 3	Overall reliability statistics on this feeder have been impacted by several weather events, tree related incidents and broken line component issues. Work is being carried out on this feeder under the 2019–2020 Distribution System Upgrades project.
Bottom Waters, Line 6	Poor reliability statistics were driven by several weather events, tree related incidents and line hardware failures. Work is being carried out on this feeder under the 2019–2020 Distribution System Upgrades project.
Bottom Waters, Line 7	Overall reliability was impacted due to broken line hardware i.e. insulators, cross arm, primary conductor, overhead transformer. Work is being carried out on this feeder under the 2019–2020 Distribution System Upgrades project.
Burgeo, Line 1	This feeder was upgraded as part of the 2017–2018 distribution system upgrades project. Prior to the capital project, this line performed poor due to broken line hardware incidents. No additional work is required at this time.

Feeder	Summary
Burgeo, Line 2	This feeder has been upgraded in 2018. Prior to the upgrading project the feeder reliability was significantly impacted by several broken line hardware issues. No additional work is required at this time.
Burgeo, Line 3	This feeder has been upgraded in 2018. Prior to the upgrading project the feeder reliability was significantly impacted by several broken line hardware issues. No additional work is required at this time.
Burgeo, Line 4	This feeder was upgraded as part of the 2017–2018 distribution system upgrades project. Prior to the capital project, this line performed poor due to broken line hardware incidents. Since 2018 the reliability has generally been good. No additional work is required at this time.
Burgeo, Line 5	In 2015–2019, poor reliability statistics were driven by primary conductor failures and other line hardware failures. This feeder is located in extremely remote area. Power restoration is often delayed significantly due to limited access during adverse weather. This feeder will continue to be monitored to determine if it should be considered for upgrading in a future capital budget.
English Harbour, Line 1	In 2015–2019, poor reliability statistics were driven by several weather events, tree related incidents, broken pole and line hardware failures. This feeder was upgraded as part of the 2018–2019 distribution system upgrades project.
Farewell Head, Line 1	In 2016, all the customers of this feeder experienced a 16-hour power outage caused by an overhead guy failure during adverse weather. Power outage was extended due to remote access. In 2018, two protective equipment issues (a faulty sectionalizer and a faulty circuit breaker) contributed to poor reliability statistics. No work is required at this time.
Farewell Head, Line 4	In 2015–2019, multiple incidents of broken primary conductor contributed to poor reliability statistics. The primary line of FHD-L4 consists of portions of #2 ACSR conductor, which is non-standard and prone to failure. There are a number of locations in the #2 ACSR conductor section where the primary conductor has failed, resulting in power outages. A feeder assessment of this feeder has been completed recently and it is recommended to include this feeder in Distribution System Upgrades 2021–2022. Details are provided in the main report.
Farewell Head, Line 5	This feeder has been experiencing power outage mainly due to equipment failures. Deteriorated poles, broken line hardware and damaged conductors are dominating outage causes in recent years. A feeder assessment of this feeder has been completed recently and it is recommended to include this feeder in Distribution System Upgrades 2021–2022. Details are provided in the main report.
Farewell Head, Line 6	Poor reliability statistics were driven by two defective recloser events and three broken overhead line hardware incidents in the 2015–2018 period. No work is proposed at this time but the feeder will continue to be monitored.

Feeder	Summary
Fleur-de-Lys, Line 1	Overall reliability statistics on this feeder have been impacted by several broken primary conductor incidents, and other defective line hardware incidents. Work is being carried out on this feeder under the 2020–2021 Distribution System Upgrades project.
Fleur-de-Lys, Line 2	Poor reliability statistics in 2017 were driven by several broken primary conductor incidents. The feeder performed poorly in 2018 due to broken line hardwires incidents and a tree related event. Overall reliability statistics on this feeder have been impacted by primary conductor and other defective line hardware incidents. Work is being carried out on this feeder under the 2020–2021 Distribution System Upgrades project.
Glenbernie, Line 1	The poor reliability statistics are driven by tree contacts in 2015, 2017, and 2018. Tree trimming has been planned for 2020. In 2019 one broken disconnect switch impacted the reliability of that year. No work is required at this time.
Happy Valley, Line 7	Overall reliability statistics on this feeder have been impacted by several equipment issues and vegetation related events. Tree trimming was completed in 2019. No other work is proposed at this time but the feeder will continue to be monitored.
Hawke's Bay, Line 3	Poor reliability statistics were driven by a broken pole and several line hardware failure incidents. Work is being carried out on this feeder under the 2019–2020 Distribution System Upgrades project.
Jackson's Arm, Line 2	Poor reliability statistics were driven by mainly tree-related events. Vegetation issues will be addressed and no additional work is required at this time.
Kings Point, Line 1	Poor reliability statistics were principally driven by multiple tree-related incidents. Tree trimming is being carried out on this feeder and no additional work is required at this time.
Kings Point, Line 2	Poor reliability statistics were driven by mainly tree-related events. Tree trimming was completed in 2018 and no additional work is required at this time.
L'Anse-Au-Loup, Line 2	Overall reliability statistics on this feeder have been impacted by numerous recloser operations due to unknown reason. Poor reliability statistics were also driven by several broken insulator and damage primary conductor incidents. No work is required at this time but this feeder will continue to be monitored.
Main Brook, Line 2	This feeder was upgraded as part of the 2014–2015 distribution system upgrades project. Prior to the capital project, this line had a high number of deteriorated poles, and transformers that were installed when the original line was constructed. During the upgrade project, most of the aged transformers were replaced and major part of the line was rebuilt with new poles and conductors. As a result, this feeder has performed well in 2016–2017. However; in 2018–2019 reliability statistics were driven by numerous equipment and line component issues. No work is proposed at this time but the feeder will continue to be monitored.

Feeder	Summary
Nain, Line 1	Overall reliability of this feeder was impacted by broken line hardware incident during the 2017–2019 period. Remote access of the site also contributed to the poor statistics. No work is proposed at this time but the feeder will continue to be monitored
Rocky Harbour, Line 1	Overall reliability of this feeder was impacted by broken line hardware incidents. This feeder has been upgraded as part of the 2018–2019 distribution system upgrades project.
Rocky Harbour, Line 2	In 2017 a prolonged power outage due to a tree contacts impacted the reliability. In 2018 reliability was impacted broken hardware incidents. This feeder has been upgraded as part of the 2018-2019 distribution system upgrades project.
Roddickton, Line 1	Poor reliability statistics were driven by line hardware failure issues in 2015-2019. This feeder will continue to be monitored to determine if it should be considered for upgrading in a future capital budget.
Roddickton, Line 4	Overall reliability statistics of this feeder have been impacted by broken line post insulators during the 2015–2019 period. This feeder will continue to be monitored to determine if it should be considered for upgrading in a future capital budget.
South Brook, Line 1	Overall reliability statistics on this feeder have been impacted by trees falling across the line during wind storms. Tree trimming was completed in 2018–2019 to address the vegetation issues and no additional work is required at this time.
South Brook, Line 5	Overall reliability statistics was impacted by a prolong power outage due to a leaning pole incident in 2017. No work is required at this time.
St. Anthony, Line 1	Reliability has generally been good. Two broken conductor incidents in 2018–2019 impacted overall reliability. No work is required at this time.
St. Anthony, Line 3	Overall reliability statistics on this feeder have been impacted by numerous issues. Work is being carried out on this feeder under the 2020–2021 Distribution System Upgrades project.

22. Replace Light- and Heavy-Duty Vehicles (2021–2022)

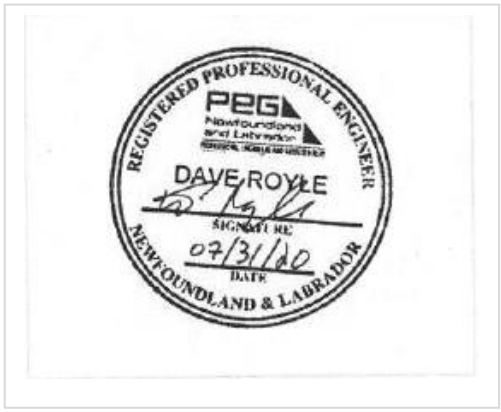

2021 Capital Budget Application

Replace Light- and Heavy-Duty Vehicles (2021–2022)

July 2020

An application to the Board of Commissioners of Public Utilities

newfoundland labrador hydro
a nalcor energy company

Executive Summary

Newfoundland and Labrador Hydro (”Hydro”) operates a fleet of vehicles comprised of approximately 270 light-duty vehicles (cars, pick-ups, and vans) and 65 heavy-duty trucks (aerial devices, material handlers, and boom trucks). The fleet is distributed across Hydro’s operating areas throughout the province and is utilized on a daily basis to support staff engaged in the maintenance and repair of the electrical system.

This project provides for the replacement of light-duty and heavy-duty vehicles that meet the established replacement criteria. Hydro has revised its criteria for light-duty vehicles to extend the age and kilometre threshold, and Hydro’s replacement criteria for both light- and heavy-duty vehicles are similar to other utilities. This project will contribute to the reliable operation of Hydro’s Light- and Heavy-Duty Vehicle Fleet.

This project is estimated to cost approximately $2,656,000, with scheduled completion in 2022.

Contents

Executive Summary i
1.0 Introduction 1
2.0 Background 1
2.1 Existing System 2
2.2 Operating Experience 2
3.0 Justification 2
4.0 Analysis 2
4.1 Identification of Alternatives 2
4.2 Evaluation of Alternatives 3
4.2.1 Replace Vehicles as per Set Criteria 3
4.2.2 Defer Replacement 3
4.3 Recommended Alternative 3
5.0 Project Description 3
6.0 Conclusion 4

List of Appendices

Appendix A: List of Vehicles and Aerial Devices Scheduled for Replacement

1.0 Introduction

Hydro operates a fleet of vehicles comprised of approximately 270 light-duty vehicles (cars, pick-ups, and vans) and 65 heavy-duty trucks (aerial devices, material handlers, and boom trucks). The fleet is distributed across Hydro's operating areas throughout the province and is utilized on a daily basis to support staff engaged in the maintenance and repair of the electrical system.

2.0 Background

Hydro maintains a close liaison with other Canadian utilities through participation on the Canadian Utility Fleet Council. Hydro has established vehicle replacement criteria that consider the operating regime for the vehicles and the average replacement criteria used by other Canadian utilities.

Hydro's replacement criteria for light-duty and heavy-duty vehicles are provided in Table 1. The replacement criteria for similar utilities is included in Table 2.

Table 1: Replacement Criteria - Hydro

Vehicle	Replacement Criteria
Light-Duty	7 years or > 200,000 km and Condition/Maintenance Cost
Heavy-Duty:	
Classes 4, 5, and 6	6–8 years or > 200,000 km and Condition/Maintenance Cost
Class 7 and 8	7–9 years or > 200,000 km and Condition/Maintenance Cost

Table 2: Replacement Criteria – Other Utilities

Utility Number 1

Vehicle	Replacement Criteria
Light-Duty	5 years or 200,000 km
Heavy-Duty	8 years or 300,000 km

Utility Number 2

Vehicle	Replacement Criteria
Light-Duty	5–6 years or 200,000 km
Heavy-Duty:	
Class 3, 4, 5, and 6	8 years or 300,000 km
Class 7 and 8	10 years or 300,000 km

Utility Number 3

Vehicle	Replacement Criteria
Light-Duty	5 years or 150,000 km
Heavy-Duty	10 years or 250,000 km

2.1 Existing System

Please refer to Appendix A for a detailed equipment listing, as of January 2020. The listing includes age at retirement, projected kilometres at retirement, and maintenance costs of the vehicles being replaced under this proposal.

2.2 Operating Experience

Table 3 provides the five-year purchase history for vehicle and aerial devices and the budgets for 2019 and 2020.

Table 3: Vehicle and Aerial Device Purchases (2016–2020)

Year	Units Purchased		Budget	Actuals
	Vehicles	Aerial Devices	($000)	($000)
2020–2021B	29	10	3,209.00	-
2019–2020B	27	5	1,843.00	-
2018	36	10	2,420.90	2,044.30
2017	36	10	2,400.20	2,173.40
2016	40	4	1,977.50	1,977.50

Please refer to Appendix A for the life-to-date maintenance costs for vehicles proposed to be replaced under this project.

3.0 Justification

This project will contribute to the reliable operation of Hydro's light and heavy-duty vehicle fleet. This fleet is utilized on a daily basis to support staff engaged in the maintenance and repair of the electrical system. Reliable transportation is necessary for efficient deployment of resources and the safe and timely response to events potentially impacting the supply of power to customers.

4.0 Analysis

4.1 Identification of Alternatives

- Alternative 1 – Replace vehicles as per the set criteria.
- Alternative 2 – Defer Replacement.

4.2 Evaluation of Alternatives

4.2.1 Replace Vehicles as per Set Criteria

Under this alternative Hydro will replace light and heavy duty vehicles that meet the criteria shown in Table 1 and as detailed in Appendix A.

4.2.2 Defer Replacement

Hydro considered the deferral of replacements against its replacement criteria.[1] Where the replacement criteria was met, deferral is not considered an option. Any replacements outside of these criteria are based on condition and cannot be deferred.

4.3 Recommended Alternative

It is recommended to replace the identified vehicles identified in this report as per the set criteria which have been revised for 2021.

5.0 Project Description

This project will replace 26 light-duty vehicles and six (6) heavy-duty vehicles. The project estimate is provided in Table 5.

Table 5: Project Estimate ($000)

Project Cost	2021	2022	Beyond	Total
Material Supply	1,196.2	1,126.7	0.0	**2,322.9**
Labour	0.0	0.0	0.0	**0.0**
Consultant	0.0	0.0	0.0	**0.0**
Contract Work	0.0	0.0	0.0	**0.0**
Other Direct Costs	0.0	0.0	0.0	**0.0**
Interest and Escalation	64.9	152.1	0.0	**217.0**
Contingency	59.8	56.3	0.0	**116.1**
Total	**1,320.9**	**1,335.1**	**0.0**	**2,656.0**

This is a two-year project as the majority of the larger vehicles that are requisitioned in the first year will not be delivered until the second year of the project. Hydro plans to replace all proposed vehicles by 2022.

[1] Hydro revised its criteria for light-duty vehicles to extend the age and kilometre thresholds. The age threshold is extended to 7 years versus the prior 5 – 7 years and the kilometre threshold is extended to >200,000 km versus the prior >150,000 km. The revised threshold for light-duty vehicles is reflected in Table 1.

6.0 Conclusion

Hydro has established vehicle replacement guidelines based upon its own experience and the learned experience of other utilities through participation on the Canadian Utility Fleet Council. These guidelines consider the operating regime for the vehicles and average replacement criteria used by other Canadian utilities.

This project will contribute to the reliable operation of Hydro's Light- and Heavy-Duty Vehicle Fleet.

Appendix A

List of Vehicles and Aerial Devices Scheduled for Replacement

newfoundland labrador hydro
a nalcor energy company

Type	Description	Age to Retire	Projected Kilometres in 2021	Price	Condition	Life-to-Date Maintenance	Age
Car	V1339, 2011 Dodge Avenger	9.9	216,000	$25,000	age/kms	$17,780.00	10 years
Car	V1340, 2012 Dodge Avenger	9.7	160,000	$25,000	age/kms	$18,470.65	9 years
Car	V1349, 2012 Dodge Avenger	9.0	165,000	$25,000	age/kms	$11,868.98	9 years
Car	V1350, 2012 Dodge Avenger	9.0	165,000	$25,000	age/kms	$8,265.58	9 years
Car	V1354, 2013 Dodge Avenger	8.1	165,000	$25,000	age/kms	$11,298.68	8 years
Car	V1355, 2013 Dodge Avenger	8.1	180,000	$25,000	age/kms	$10,821.80	8 years
Car	V1356, 2013 Dodge Avenger	8.1	165,000	$25,000	age/kms	$11,717.76	8 years
Pickup Truck	V2741, 2011 GMC 1500	7.3	170,000	$35,000	age/kms	$18,050.49	10 years
Pickup Truck	V2803, 2013 Chev 1500	8.2	180,000	$35,000	age/kms	$16,849.95	8 years
Van	V2810, 2014 Chev 2500	6.8	170,000	$58,000	age/kms	$15,984.90	7 years
SUV	V2814, 2014 Chev Equinox	6.2	210,000	$25,000	age/kms	$15,287.75	7 years
Pickup Truck	V2819, 2014 Chev 2500	7.1	170,000	$39,000	age/kms	$8,841.67	7 years
Pickup Truck	V2832, 2014 Ford F-150	6.9	185,000	$35,000	age/kms	$10,150.41	7 years
Van	V2839, 2014 Chev 2500	5.9	175,000	$58,000	age/kms	$13,718.90	7 years
Pickup Truck	V2853, 14 Chev 1500	5.1	200,000	$35,000	age/kms	$9,851.96	7 years
Pickup Truck	V2878, 2015 Chev 2500	5.9	210,000	$39,000	age/kms	Not Available	6 years
Van	V2883, 2016 Chev 2500	5.6	200,000	$58,000	age/kms	$9,941.78	5 years
Van	V2886, 2016 Chev 2500	5.6	195,000	$58,000	age/kms	$13,244.16	5 years
Van	V2888, 2016 Chev 2500	5.6	215,000	$58,000	age/kms	$13,625.01	5 years
Van	V2890, 2016 Chev 2500	5.6	205,000	$58,000	age/kms	$10,208.36	5 years
Pickup Truck	V2899, 2016 Chev 1500	5.1	190,000	$36,000	age/kms	$7,379.42	5 years
SUV	V2913, 2017 Chev Equinox	4.8	235,000	$25,000	age/kms	$9,556.39	4 years
SUV	V2914, 2017 Chev Equinox	4.8	250,000	$25,000	age/kms	$9,080.52	4 years
Pickup Truck	V2917, 2017 Chev 1500	4.8	210,000	$36,000	age/kms	$11,312.22	4 years
Pickup Truck	V2941, 2016 Chev 2500	4.8	215,000	$39,000	age/kms	$9,409.28	5 years
Pickup Truck	V2945, 2016 Chev 2500	4.8	200,000	$39,000	age/kms	$12,248.35	5 years

Type	Description	Age to Retire	Projected Kilometres in 2022	Price	Condition	Life-to- date Maintenance	Age at 2022
Boom Truck	V4518, 2009 IHC 7500	12.4	80,000	$250,000	age/rust	$14,124.40 Incomplete/shop	13 years
Boom Truck	V4525, 09 Intl 4400	11.6	85,000	$300,000	age/rust	$26,417.44	13 years
Boom MHAD	V4530, 11 Intl 7500(Max-Force)	10.6	65,000	$320,000	age/engine	$14,764.59 Incomplete/shop	11 years
Boom MHAD	V4545, 14 Intl 7500(Max-Force)	7.9	195,000	$320,000	high cost/ engine	$55,000	8 years
Boom MHAD	V4546, 14 Intl 7500(Max-Force)	7.9	200,000	$320,000	high cost/ engine	$60,000	8 years
Aerial Device	V4549, 13 Dodge 5500	7.4	205,000	$180,000	high cost/ excessive downtime	$56,597.06	9 years

23. Replace Transfer Switches and Associated Hardware - Hydro Place



2021 Capital Budget Application

Replace Transfer Switches and Associated Hardware

Hydro Place

July 2020

A report to the Board of Commissioners of Public Utilities

newfoundland labrador hydro
a nalcor energy company

Executive Summary

Hydro Place is located in St. John's, Newfoundland and contains the Energy Control Center ("ECC"), hardware associated with Newfoundland and Labrador Hydro's ("Hydro") company-wide computer network, and other key corporate infrastructure. Hydro Place has two backup diesel generators and other electrical equipment, which can be used to provide power to this critical infrastructure in the event of a power outage.

In January 2020, a condition assessment of the Hydro Place Emergency Power System was completed by a consultant. This assessment indicated that refurbishment of some of the equipment within the emergency power system is required to minimize the risk of a prolonged failure. These refurbishments include the replacement of synchronization controls, the replacement of 600 V circuit breakers within the emergency power switchgear panel, and the replacement of automatic transfer switches. This equipment that is critical for the operation of the emergency power system, is no longer supported by manufacturers and replacement parts are either difficult or no longer possible to obtain.

This project includes the replacement of certain equipment necessary to provide backup power to critical loads within the Hydro Place facility and is estimated to cost approximately $1,135,800. The planned completion timeline is September 2022.

Contents

Executive Summary i
1.0 Introduction 1
2.0 Background 1
2.1 Existing System 1
2.2 Operating Experience 2
3.0 Justification 2
4.0 Analysis 3
4.1 Identification of Alternatives 3
4.2 Evaluation of Alternatives 3
4.2.1 Deferral 3
4.2.2 Replace One Transfer Switches 3
4.2.3 Replacement of the Transfer Switches and Associated Equipment 3
4.3 Recommended Alternative 3
5.0 Project Description 4
6.0 Conclusion 5

List of Attachments

Attachment 1: Emergency Power System Condition Assessment, Maderra Engineering

1.0 Introduction

Hydro Place is located in St. John's, Newfoundland and includes the ECC, hardware associated with Hydro's company-wide computer network, and other key corporate infrastructure. Hydro Place has two backup diesel generators and other electrical equipment that can be used to provide power to this critical infrastructure in the event of a power outage.

The electrical equipment used to provide backup power to the ECC and other critical loads within Hydro Place includes automatic transfer switches, synchronization controls, and 600 V circuit breakers. These components are original to the construction of Hydro Place in the early 1990s.

A condition assessment of the emergency power system was conducted by Maderra Engineering ("Maderra") in January 2020. Maderra's report, containing additional details regarding the condition of the equipment being recommended for replacement and concerns with the availability of spare parts and support, is provided in Attachment 1. The condition assessment included a recommendation to replace the circuit breakers located in the normal switchgear panel. These breakers supply normal or noncritical loads within the Hydro Place facility. At this time, the additional costs associated with this work are not justified and, as such, that component of work is being deferred.

2.0 Background

2.1 Existing System

Under normal situations, electrical service is provided via two feeds from Newfoundland Power to Hydro Place's main switchgear panel. These feeds supply normal service busses that are used to distribute power to various busses and distribution panels throughout the facility. While a feed from Newfoundland Power is in service, normal and critical loads are supplied from the main switchgear panel.

Under emergency situations, electrical service to critical loads is provided from the emergency bus contained within the emergency power switchgear panel. The emergency bus is supplied from the two emergency diesel generators. The emergency bus supplies power to the four automatic transfer switches.

The emergency power switchgear panel also includes the synchronization controls (the ASCO Synchropower System consisting of two control modules) that start the diesels and synchronizes them

to operate together. There are also two, 300 kW diesel generators, each of which is sized to provide the full load required for emergency situations. If one of the diesels failed, the load would be assumed by the unit still in service.

Each of the automatic transfer switches monitors the incoming power feeds and transfers its critical loads from the normal utility feed to the emergency feed upon loss of the normal supply.

The emergency power switchgear panel includes six, 600 V circuit breakers. Two circuit breakers are used to supply the emergency bus from the diesels. Four circuit breakers are used to feed the automatic transfer switches.

2.2 Operating Experience

The emergency power system located within Hydro Place is original to the building's construction and is approximately 30 years old. The system is tested regularly and, while both generators have less than 500 operating hours, the components identified within the scope of this project require refurbishment to minimize the risk of a prolonged failure.

3.0 Justification

There are four automatic transfer switches included within the backup power system. Fabrication of replacement parts for these units ceased over five years ago.

The emergency power switchgear panel includes two synchronization control modules that handle the start-up and synchronization of the two, 300 kW backup diesel generators. Parts are no longer supported as the technology is obsolete.

The emergency power switchgear panel also includes six, 600 V circuit breakers that are connected to the emergency bus. The Original Equipment Manufacturer ("OEM") of these circuit breakers, Federal Pioneer, no longer exists and replacement parts are no longer produced or supported by Schneider Electric, which provides support for this equipment. The proposed solution is to replace these breakers with retrofit kits.

The intent of the backup system is to provide emergency power to the building and, most importantly, the ECC. If a piece of equipment were to fail suddenly, there are no stock replacement parts readily

available to promptly address this failure. This has the potential to cause substantial downtime to the emergency power system.

4.0 Analysis

4.1 Identification of Alternatives

The following alternatives were considered:

- Deferral;
- Replace one of the transfer switches; and
- Replacement of the transfer switches and associated equipment as recommended by Maderra.

4.2 Evaluation of Alternatives

4.2.1 Deferral

Under this alternative, the transfer switch and associated equipment would not be replaced in 2021. It has been identified that this equipment is near the end of its service life and is no longer supported. Hydro does not recommend deferral as it presents a significant risk to reliable operation of the emergency power system which supports, among other things, the ECC which is critical to the operation of the provincial electrical grid.

4.2.2 Replace One Transfer Switches

Under this alternative, one of the transfer switches would be replaced and salvaged to provide spare parts for the three remaining in-service units. It has been identified that the automatic transfer switches are near the end of their service life and are no longer supported. Therefore, this risk is unacceptable and this alternative is not a viable option.

4.2.3 Replacement of the Transfer Switches and Associated Equipment

Under this alternative, the transfer switches and associated equipment would be replaced in 2021, as recommended by Maderra, allowing Hydro to address concerns with the availability of spare parts and support.

4.3 Recommended Alternative

Hydro recommends replacing the transfer switches and associated equipment to allow Hydro to mitigate the risk of extended downtime to the backup power system.

5.0 Project Description

The scope of this project includes:

- The replacement of four automatic transfer switches;
- The replacement of two synchronization control modules located within the emergency power switchgear panel, which perform the start-up and synchronization of the backup diesel generators; and
- The replacement of six 600 V circuit breakers located within the emergency power switchgear panel that are connected to the emergency bus.

The project estimate is shown in Table 1.

Table 1: Project Estimate ($000)

Project Cost	2021	2022	Beyond	Total
Material Supply	0.0	0.0	0.0	**0.0**
Labour	80.5	54.2	0.0	**134.7**
Consultant	90.0	27.6	0.0	**117.6**
Contract Work	0.0	706.2	0.0	**706.2**
Other Direct Costs	0.0	0.0	0.0	**0.0**
Interest and Escalation	9.7	71.7	0.0	**81.4**
Contingency	17.1	78.8	0.0	**95.9**
Total	**197.3**	**938.5**	**0.0**	**1,135.8**

The anticipated project schedule is shown in Table 2.

Table 2: Project Schedule

Activity	Start Date	End Date
Planning:		
Open project, initial planning, and scheduling	January 2021	March 2021
Detailed Design/Procurement:		
Complete detailed design and tender and award of supply and install contract	April 2021	September 2021
Construction/Commissioning:		
Removal of old equipment, installation, and commissioning of new equipment	May 2022	June 2022
Closeout:		
Project completion and closeout	July 2022	September 2022

6.0 Conclusion

Equipment necessary to provide backup power to various critical loads within Hydro Place is no longer supported by the original manufacturers and spare parts are no longer available. As such, a failure of this equipment has the potential to cause significant downtime to Hydro Place's emergency power system. This project is necessary to maintain reliable backup power to these critical loads.

Attachment 1

Emergency Power System Condition Assessment, Maderra Engineering

newfoundland labrador hydro
a nalcor energy company

REPORT

Title: EMERGENCY POWER SYSTEM CONDITION ASSESSMENT			*Corporate Stamp:*
Client: NALCOR			
Facility: HYDRO PLACE, ST. JOHN'S			*Engineers Stamp:*
Client Project Reference: N/A	*Client Document No.:* N/A	*Revision:* N/A	
Maderra Project Reference: NAL092	*Maderra Document No.:* NAL092-EL-RP-001-00	*Revision:* A0	

PROVINCE OF NEWFOUNDLAND AND LABRADOR
PERMIT HOLDER
THIS PERMIT ALLOWS
MADERRA ENGINEERING
To practice Professional Engineering in Newfoundland and Labrador. Permit No. as issued by PEG Y0253 which is valid for the year 2020 by Permit Holder (MIRC No.) 02824

PROFESSIONAL ENGINEER
REGISTERED
PEG Newfoundland and Labrador
Renard Froude
SIGNATURE
APRIL 20,2020
DATE
NEWFOUNDLAND & LABRADOR

Maderra Engineering
Suite 102, 45 Hebron Way
St. John's, NL, Canada, A1A 0P9
709-739-5002 (p), 709-739-7741 (f)
Maderra.ca, info@maderra.ca

REVISION HISTORY							
				RF		RF	
N/A	A0	20 April, 2020	Issued for Client Review	R. Froude	G. Hobbs	R. Froude	
Client Revision	*Maderra Revision*	*Date*	*Reason for Issue*	*Originator*	*Checked by*	*Approved by*	*Client Approval*

TABLE OF CONTENTS

1.0 INTRODUCTION 5
2.0 PURPOSE 6
3.0 SCOPE 7
4.0 EXISTING EMERGENCY POWER SYSTEM 8
4.1 SEQUENCE OF OPERATION 8
4.2 EQUIPMENT AND COMPONENTS 9
4.2.1 GENERATORS 9
4.2.2 SYNCRO CONTROLS 9
4.2.3 AUTOMATIC TRANSFER SWITCHES 10
4.2.4 NORMAL POWER SYSTEM SWITCHGEAR 10
5.0 CONDITION ASSESSMENT 11
5.1 INTRODUCTION 11
5.2 300KW GENERATORS 11
5.3 SYNCHRO CONTROLS 11
5.4 AUTOMATIC TRANSFER SWITCHES 12
5.5 NORMAL POWER SYSTEM SWITCHGEAR 12
6.0 VENDOR RECOMMENDATIONS 13
6.1 300KW GENERATORS 13
6.2 SYNCHRO CONTROLS 13
6.3 AUTOMATIC TRANSFER SWITCHES 13
6.4 NORMAL POWER SYSTEM SWITCHGEAR 13
7.0 SHORT TERM PLANNING OPTIONS 14
7.1 INTRODUCTION 14
7.2 SYNCHRO CONTROLS 14
7.3 AUTOMATIC TRANSFER SWITCHES 14
8.0 PHASING OF WORK 15
9.0 COST ESTIMATE 16
10.0 SUMMARY 17
11.0 RECOMMENDATIONS 18

ATTACHMENT A – SINGLE LINE DIAGRAM

ATTACHMENT B – EXISTING CAT 3406B 300KW GENERATORS

ATTACHMENT C – EXISTING ASCO SYNCHROPOWER SYSTEM

ATTACHMENT D – EXISTING FEDERAL PIONEER GENERATOR CIRCUIT BREAKERS (G1 & G2)

ATTACHMENT E – EXISTING EMERGENCY BUS DISTRIBUTION CIRCUIT BREAKERS

ATTACHMENT F – EXISTING ASCO AUTOMATIC TRANSFER SWITCHES

ATTACHMENT G – EXISTING NORMAL POWER SWITCHGEAR

ATTACHMENT H – DETAILED COST ESTIMATE

ATTACHMENT I – VENDOR CONTACT INFORMATION

1.0 INTRODUCTION

The emergency power system located at Hydro Place in St. John's Newfoundland is critical to the operations of NL Hydro and Nalcor. More specifically, the Energy Control Centre (ECC) that is located at Hydro Place is the heart of Newfoundland and Labrador's electrical system. Providing dependable backup power to the ECC and associated systems is a top priority for NL Hydro.

In December of 2019, scheduled maintenance was completed by ASCO Power Technologies on the four (4) automatic transfer switches located at Hydro Place. The maintenance report indicated that there is moderate pitting on the power contacts in the switches. It was also noted that the existing automatic transfer switches are five (5) years beyond the service life offered by ASCO. Therefore, if the transfer switch components were to fail, no replacement parts will be available from ASCO.

In January of 2020, NL Hydro engaged Maderra Engineering to review the findings noted in ASCO's maintenance reports. During the preliminary site visit with NL Hydro staff it was suggested that the entire emergency backup power system should be reviewed as other components such as the generator controls and circuit breakers are of the same age as the automatic transfer switches.

The emergency backup power system comprises of three (3) main segments:

- Two (3) 300 kW CAT generators
- One (1) ASCO Synchropower System
    - Generator start-up controls, one per generator
    - Synchronizer
    - Emergency Bus
    - Six (6) Circuit Breakers
- Four (4) ASCO 962 Automatic Transfer Switches

During the preliminary site visit maintenance labels were reviewed. The generators are maintained and serviced by Glenn Nichols Engine Services Ltd. The ASCO synchronization controls and automatic transfer switches are serviced by ASCO Power Technologies. The circuit breakers in the ASCO Synchropower System are serviced by Schneider Electric.

Maderra Engineering contacted Glenn Nichols Engine Services Ltd, ASCO Power Technologies, and Schneider Electric to inquire about the maintenance records for each segment of the emergency backup power system. Based on the feedback received it was suggested that a site visit be arranged to review and discuss the condition of the existing equipment with NL Hydro personnel. Glenn Nichols noted that the generators are in good condition and that he would provide a list of recommended upgrades/replacement parts and that it wasn't necessary for him to attend the site visit.

On February 19th, 2020 Renard Froude of Maderra Engineering, Witold (Vito) Lemczyk of ASCO Power Technologies, and Barry James of Schneider Electric met with John Poole and Chris Cahill of NL Hydro to review the existing configuration and equipment of the emergency backup power system.

Note: ASCO Power Technologies was acquired by Schneider Electric on October 31st, 2017.

2.0 PURPOSE

The purpose of this document is to present the findings and recommendations based on information collected during site visits and communications with NL Hydro, ASCO and Schneider Electric related to the equipment in the existing emergency backup power system located at Hydro Place in St. John's, NL. These findings and recommendations will provide NL Hydro with pertinent information to allow for future planning of maintenance work and equipment replacement on this system.

This report will summarize the findings of the equipment assessment, including:

- A summary of the existing emergency power system.
- A summary of recommendations for upgrades to the existing emergency power system.
- Evaluation of risks and concerns with replacing components while the building is operating.
- Identification of any equipment that can be left in place and/or be reused.
- Findings and Recommendations.
- Cost estimate (+/-40%) to implement the recommended replacement components, including engineering, materials, installation, and commissioning costs.

3.0 SCOPE

A site visit was completed at Hydro Place by personnel from Maderra Engineering, NL Hydro, ASCO, and Schneider Electric to complete the following:

- Review the existing system and components.
- Discussion with NL Hydro to gather information on the sequence of operation of the existing system.
- Review previous maintenance reports from ASCO, Schneider Electric and Glenn Nichols Engine Services Ltd.
- Document upgrade/modifications to the existing equipment since it was installed.

During this site visit it was noted that the normal power switchgear is of the same make, model and vintage as the emergency power system switchgear. This equipment is included in the condition assessment as it will fall under the same recommendations as the circuit breakers located in the emergency power system equipment.

In addition to the site visit, the following were also completed as part of the scope:

- Follow up with Glenn Nichols Engine Services, ASCO and Schneider Electric to determine recommended maintenance, upgrades, and replacements.
- Follow up with NL Hydro personnel to assist with capital budget funding and planning.
- Cost estimates from vendors.

4.0 EXISTING EMERGENCY POWER SYSTEM

4.1 SEQUENCE OF OPERATION

The Normal electrical power service in the Hydro Place building has two (2) incoming utility feeds to the main switchgear as indicated on NL Hydro Drawing B1-87092-E-04, Rev. 21, refer to Attachment A. There is one lineup of Normal power switchgear which includes Normal Service Bus #1 and Normal Service Bus #2. There is an existing kirk key interlock tie-breaker that allows for the two (2) Normal service buses to be isolated from each other or for one Normal bus to sub-feed power to the other Normal bus.

At the time of the site visit, the main circuit breaker for the incoming utility power feed to Normal Bus #1 was open and the main circuit breaker for the incoming utility feed to Normal Bus #2 was closed. The tie-breakers between the two Normal Service buses were closed as well. Therefore, Normal Bus #2 was sub-feeding power to Normal Bus #1.

Normal Bus #1 has seven (7) circuit breakers, two (2) of those circuit breakers sub-feed power to ATS-1 and ATS-3. From ATS-1 there is a feed that continues to Panel DP1-C and from ATS-3 there is a feed that continues to Panel DP1-E.

Similarly, Normal Bus #2 has seven (7) circuit breakers, two (2) of those circuit breakers sub-feed power to ATS-2 and ATS-4. From ATS-2 there is a feed that continues to Panel DP2-C and from ATS-4 there is a feed that continues to Panel DP2-E.

The Emergency Bus is housed in the ASCO Synchropower System equipment. Each of the two (2) 300kW generators supplies power to this common emergency bus. There is a 400A main circuit breaker in-line between the incoming electrical supply from each generator to the common, Emergency Bus. From the load side of the emergency bus there are four (4) circuit breakers, one (1) that connects to each of the four (4) ATS's.

The design of the emergency power system was based on having 2 x 100% redundant generators, so that in the case of a failure of one of the generators, the system would still be fully powered. Therefore, each 300kW generator was sized to provide adequate back up power to all four (4) ATS's and subsequent panels that are feed from these ATS's.

Each ATS will monitor the normal incoming power feed and will communicate back to the Synchropower System if there is a need to switch over to the emergency power supply. In this case, the Synchropower System will start up one (1) of the two (2) 300kW generators to provide power to the Emergency Bus. Once the emergency power supply is running within the defined parameters, the ATS will operate the internal switch to transfer over from utility feed to backup generator feed. In the case where there is a loss of utility power to the building, all four (4) ATS's switch over to backup power. The sequence of switching each ATS is determined and controlled by the Synchropower System. If there is a call to transfer all four (4) ATS's at the same time, each ATS would be switched over, one at a time to reduce the start-up load on the generators. If there is an issue with the normal power feed to an individual ATS, only that ATS would switch over from normal power to backup power.

To ensure that backup power supply is reliable, the Synchropower System will start up the second 300kW generator and begin to synchronize the generators together to balance the electrical load across both units. If either unit was to shut off based on a problem with that unit, the second generator would ramp up to handle the full load of the entire emergency system. Thus, providing a reliable backup power source without interruption of power if one generator was to fail.

The emergency backup power system can also be operated in manual mode from the controls on the front of the Synchropower System. Each generator can be manually started and synchronized to supply backup power the system. Each ATS also has a manual bypass switch that can be operated to transfer from one power supply to the other.

4.2 EQUIPMENT AND COMPONENTS

4.2.1 GENERATORS

There are two (2) 3406B, 300kW CAT generators located in the main electrical room at Hydro Place. These generators are original to the building's construction and are therefore approximately 30 years old.

4.2.2 SYNCRO CONTROLS

The two (2) CAT generators are automatically operated and synchronized by an ASCO Synchropower System which is also original to the building's construction, and therefore approximately 30 years old. Each generator has a separate control section in the ASCO Sychropower system.

In each control section, the following meters are located on the front panel:

- Power Factor
- Hours of Run Time
- Kilowatts
- Frequency in Hertz
- Amperes
- Volts

Each control section also has the following status, alarms and notifications local to the panel:

- Engine Running
- Circuit Breaker Open
- Circuit Breaker Closed
- Circuit Breaker Trip Shutdown
- Over Crank Shutdown
- Overspeed E-Stop Shutdown
- Low Oil Pressure Shutdown
- High Water Temperature Shutdown
- Reverse Power Shutdown
- Low Oil Pressure Alarm
- High Water Temperature Alarm
- Low Fuel
- Battery Charger Failure Pre-Alarm

- Low Battery Voltage Pre-Alarm
- Failure to Synchronize
- Controls Not In Auto

In each of the two (2) generator control sections there is a 400A main circuit breaker inline between the incoming electrical supply from each generator and the emergency bus.

4.2.3 AUTOMATIC TRANSFER SWITCHES

There are four (4) ASCO 962 Automatic Transfer Switches that switch between normal utility power and backup, emergency generator power. These switches are original to the building's construction and are therefore approximately 30 years old. The existing units have manual bypass switches, but the unit cannot be isolated for maintenance without deenergizing the ATS.

4.2.4 NORMAL POWER SYSTEM SWITCHGEAR

The normal power system switchgear is not a part of the emergency power system condition assessment, but during the site visit for the emergency power system condition assessment it was noted the normal power system switchgear was installed at the same time as the emergency power system equipment. The existing circuit breakers are the same make (Federal Pioneer) and model as those in the emergency switchgear.

In addition to the main circuit breakers, there are fourteen (14) distribution circuit breakers and two (2) spare buckets for a total of sixteen (16) buckets in the normal power switchgear. One of the original circuit breakers has been removed and replaced with a retrofit kit complete with modern, solid state trip unit circuit breaker within the last 2 years.

5.0 CONDITION ASSESSMENT

5.1 INTRODUCTION

The condition assessment of equipment associated with the emergency backup power system was based on visual inspection, maintenance inspection reports, and original equipment manufacturers (OEM) information.

5.2 300KW GENERATORS

Visual inspection of the existing 300kW generators indicate that they have been well maintained and show no signs of deterioration. Both units are housed indoors in the main electrical room at Hydro Place. Each generator is exercised manually on a monthly basis to ensure that the system works as designed. Based on the readings from the generator there is less than 500 hours of run time on each unit.

Glenn Nichols of Glenn Nichols Engine Services Ltd. communicated that the following service has been completed in recent years:

- Louver controls updated.
- Oil sampling and testing twice a year.
- Injectors were replaced five (5) years ago.

Glenn Nichols recommended the following items for maintenance/service:

- Engine coolers are 25 years old and due for replacement.
- Procure a spare starter for the generator to have in stock in case of starter failure.

There is no indication from Glenn Nichols that replacement parts were no longer available from CAT for the two (2) generators.

5.3 SYNCHRO CONTROLS

There have been no reports of known issues related to the operation of the existing ASCO Synchropower System. Visually, the enclosure and controls on the outside of the unit are in good condition. It was communicated by Witold (Vito) Lemczyk of ASCO Power Technologies Canada that replacement parts are no longer available for the existing control components (relays, timers, control modules) in the Synchropower System's control unit. There may be spare parts available online or at local distributors, but these parts are no longer in production so once any remaining stock is sold, there will be no replacements for this control unit.

If some of the internal components were to fail, troubleshooting would be expected to determine the root cause of the issue. Once the failed component is identified, finding a suitable replacement part could take weeks to source.

The original circuit breakers in the Synchropower System's control unit were manufactured by Federal Pioneer. Schneider Electric acquired Federal Pioneer in 1990 and became the original manufacturer of the H-series breaker and continued to manufacture it for many years. In 2003, Schneider Electric served notice of obsolescence for the H3 circuit breaker and began an active withdrawal program. New orders for the H3 breaker were no longer taken and all spare parts were made available for a period of ten (10) years (2013). After the end of 2013, only critical spare parts were available until the end of 2016. Since the end of 2016, orders for spare parts were no longer accepted by Schneider.

The existing Federal Pioneer circuit breakers have been inspected every 2 years by Schneider Electric. Replacement parts for these breakers are no longer available from the manufacturer and have been superseded by more sophisticated, modern units.

If any of these breakers were to fail, a replacement unit may be difficult to locate as a one-for-one swap out. Therefore, a retrofit kit and new solid-state Schneider circuit breaker would be required.

5.4 AUTOMATIC TRANSFER SWITCHES

The four (4) existing ATS's are original to the building's construction. Visual inspection of the units indicate that the enclosure and controls are in good condition. At some point since the original installation, new digital controls and displays were installed in each ATS.

ASCO maintenance personnel inspect each ATS on a yearly basis and the maintenance reports have indicated that the units are five (5) years past their expected service life and that replacement components are no longer manufactured by ASCO for the majority of parts inside the automatic transfer switches. Aftermarket parts may be available but like the Synchropower Control Unit, once existing stock is no longer available, there will be very limited options to replace existing components inside the ATS.

The maintenance reports also indicated that the contactors in each switch are showing signs of minor to moderate pitting. It was also noted that the Liquid Crystal Display (LCD) on ATS-3 and ATS-4 are occasionally showing bad characters but that this issue has no impact on the normal operation of the ATS's. The maintenance reports recommend that new ATS's should be installed in the near future to avoid the possibility of unit failures without readily available replacement parts.

5.5 NORMAL POWER SYSTEM SWITCHGEAR

Visually, the enclosure and circuit breakers in the normal power system switchgear are in good condition. The existing Federal Pioneer circuit breakers in the normal power system have been included with the biennial inspection of the emergency power system circuit breakers completed by Schneider Electric. The normal power system switchgear is original to the building's construction and the existing Federal Pioneer H3 breakers are no longer supported or available from Schneider Electric.

As mentioned above in Section 5.3, Schneider Electric acquired Federal Pioneer in 1990 and became the original manufacturer of the H-series breaker and continued to manufacture it for many years. In 2003, Schneider Electric served notice of obsolescence for the H3 circuit breaker and began an active withdrawal program. New orders for the H3 breaker were no longer taken and all spare parts were made available for a period of ten (10) years (2013). After the end of 2013, only critical spare parts were available until the end of 2016. Since the end of 2016, orders for spare parts were no longer accepted by Schneider.

It was noted during the site visit that one of the original H3 circuit breakers in the normal power system switchgear had been replaced within the last two (2) years. At this time there is no requirement to replace any of the remaining circuit breakers.

6.0 VENDOR RECOMMENDATIONS

6.1 300KW GENERATORS

Glenn Nichols of Glenn Nichols Engine Services Ltd. recommended purchasing a spare engine starter to have at Hydro Place as a backup in case there is a failure to either of the existing units. It was also recommended to replace the engine oil coolers as the existing units are twenty-five (25) years old.

6.2 SYNCHRO CONTROLS

It was recommended by ASCO to replace the internal components of the synchronization control panel with new modern, digital components. The new unit would come complete with a Programmable Logic Controller (PLC) for digital control and reporting of the control unit. The existing enclosure, internal buses, and cabling would remain.

It was recommended by Schneider Electric to replace all of the existing circuit breakers in the Synchropower System with retrofit kits along with new solid-state trip units with circuit breakers.

6.3 AUTOMATIC TRANSFER SWITCHES

It was recommended by ASCO to replace all four (4) ATS's with new units complete with bypass isolation modules to allow maintenance to be done on the switches without having to disconnect the power and isolate the unit.

6.4 NORMAL POWER SYSTEM SWITCHGEAR

It was recommended by Schneider Electric to replace all of the existing circuit breakers in the normal power system switchgear with retrofit kits along with new solid-state trip units with circuit breakers.

7.0 SHORT TERM PLANNING OPTIONS

7.1 INTRODUCTION

In was communicated by NL Hydro during the site visit on February 19, 2020 that the findings indicated in this report would be used for the planning of maintenance schedules and allocated budgets for 2021, 2022 and later. Therefore, options need to be evaluated to provide reliability to the emergency power system in the interim, prior to the installation of major upgrades/replacements of the system components.

7.2 SYNCHRO CONTROLS

It is recommended to source spare parts such as relays, timers, and control modules to have on hand in case a component is to fail in the sychropower control unit.

A new circuit breaker and retrofit kit from Schneider's emergency stock can be sourced in approximately 24 hours. It should be noted that this emergency stock comes at a premium cost. Once the new circuit breaker arrives on site, arrangements would have to be made to have a Schneider technician install the unit. Depending on availability of Schneider technicians, this service install request may take longer than desired. Schneider Electric does offer a service agreement contract that would assure that a dedicated technician would be provided within a guaranteed response time.

It is recommended to source a minimum number of spare retrofit kits and H3 circuit breakers from Schneider to have available at Hydro Place in case there is failure of the circuit breakers in the emergency power system bus. Each replacement circuit breaker costs approximately $20,000, including installation, testing and commissioning.

7.3 AUTOMATIC TRANSFER SWITCHES

There are no replacement parts available for the majority of components in the ASCO automatic transfer switches. One option to source replacement parts would be to replace one of the existing units with a new ASCO 7000 series ATS and salvage the removed ATS for spare parts for the remaining three (3) ATS's.

Engineering and planning would be required to remove and replace an existing ATS. The new units have a 6 to 8-week delivery with an approximate cost of $20,000.

8.0 PHASING OF WORK

The building's main electrical systems must remain in operation while the replacement of key components is completed. The scheduling and coordination of construction crews during each phase of the upgrade will have to be well planned to eliminate prolonged disruptions of electrical service to the building and to avoid any interruption to power and operation of the ECC and other divisions at Hydro Place.

Large portions of the work would have to be completed after hours and on weekends to reduce the disruption of services affected by the work. Backup generators, automatic transfer switches, cables, and circuit breakers will have to be sourced and prepared for certain phases of the scheduled work. The after hours work and prolonged schedule will increase the labour and equipment rental costs.

The replacement of circuit breakers in the emergency and normal power systems can be done with minimum disruption. Each circuit breaker replacement would require approximately four (4) to six (6) hours to complete. The circuit breakers in the normal power system can be replaced outside of normal work hours which should eliminate the risk of affecting personnel working in the building. The circuit breakers in the emergency power system are only required to be operating when there's a loss of utility power. While it is impossible to know when there will be a loss of utility power, the replacement of these circuit breakers should be scheduled for the summer season as weather is less likely to increase the chances of losing utility power. The service work should also be scheduled outside of normal operating hours to reduce the impact to Hydro personnel if issues were to arise during this time on the emergency system.

The Automatic Transfer Switches are the only pieces of equipment that are connected to both the normal and emergency power systems. It is recommended to switch out one ATS at a time and for each replacement an electrical outage will be required. There are a few different ways in which redundancy can be achieved to keep backup power to the distribution panels that are impacted by an individual ATS being removed, such as having a temporary ATS in place or using one of the other ATS's to pick up the load of the panels. Downstream loads may have to be scheduled to allow for load management on each ATS. Each switch will require eight (8) to twelve (12) hours to remove, replace it and commission the new replacement switch.

The replacement of the existing ASCO synchropower system controls requires the most attention and planning as it will take approximately three (3) to four (4) weeks from start to finish to replace the components and commission the entire system. This item would also be done after the four ATS's are replaced as the new switches will have to communicate with the new synchro controls to provide a fully operational system. Once work begins on the replacement of the existing sychropower system controls, the automatic operation of the emergency power system will be unavailable. The generators can be operated manually and each ATS can be operated manually. The alternative is to have a temporary backup genset and controls connected into the existing system during this stage to provide automatic, redundancy for supplying electrical power if there was a loss of utility power.

The detailed planning of the phasing of work and temporary equipment rentals shall be completed in the next phase of this project.

9.0 COST ESTIMATE

A detailed cost estimate covering material, labour, engineering and NL Hydro management costs is located in Attachment H.

The cost estimate was compiled in part, using quotes provided by ASCO, Schneider Electric, and Glenn Nichols Engine Services Ltd.

The majority of the costs associated with the replacement of equipment will take place in 2021 and 2022. In the interim, replacement circuit breakers and one of the automatic transfer switches can be sourced in 2020 for approximately $150,000.

The remaining costs in 2021 and 2022 for material, labour, engineering, and temporary redundant emergency power equipment have been calculated to be approximately $655,000 based on 2020 data.

10.0 SUMMARY

The emergency power system at Hydro Place consists of two (2) backup generators, a synchronization control panel, emergency bus, six (6) circuit breakers, and four (4) automatic transfer switches.

The two (2) generators are in good condition and there are no known issues. Glenn Nichols of Glenn Nichols Engine Services Ltd. suggests that the oil coolers be replaced as they are twenty-five (25) year old. He also suggests that a spare engine starter should be sourced in case there is a failure to one of the existing units. Glenn Nichols also provided costs for the supply and installation of additional items, if desired to be completed by NL Hydro.

The synchronization control panel, circuit breakers, and automatic transfer switches are past their expected life cycle and the majority of components/parts are obsolete and replacement parts are no longer available. Schneider Electric and ASCO recommended that the entire system be retrofitted and replaced with new, modern equipment to avoid a prolonged outage of the emergency power system resulting from a failure of the existing equipment.

The replacement of the obsolete components would be scheduled and coordinated to allow for the continuous supply of backup power to the building's emergency power system during the duration of the work to ensure that electrical power is available for the critical operation of the Energy Control Center.

Internal planning for this work should begin in 2020 with priority given to sourcing spare components to have to stock in the interim in case of unexpected failure of this equipment.

Detailed engineering design should commence in 2021. Tender packages should be completed and the Electrical contractors should be awarded the construction contract for this scope of work in early 2022 to allow adequate time to procure long lead items for a summer installation of 2022.

The high-level cost to implement this work is estimated at approximately $805,000. This cost includes the material, labour, equipment rentals and engineering. This price does not include project management, internal engineering (NL Hydro), interest during construction costs, contingency or scheduling. These additional items could potentially add another $150,000 to the project budget.

11.0 RECOMMENDATIONS

The evaluation of the emergency power system at Hydro Place has resulted in the following recommendations in order of priority:

Year 1 (2020)

1. Source replacement components for the ASCO Sychropower System to have on hand in case existing components are to fail prior to the 2022 replacement.

2. Procure and install a new ASCO 7000 series automatic transfer switch.

3. Salvage the removed ASCO automatic transfer switch for replacement parts in case there are issues with the three (3) remaining automatic transfer switches.

4. Engage Glenn Nichols Engine Services Ltd. to complete the recommended replacement of components for the two generators.

5. Source engine starters for the generators to have on hand as recommended by Glenn Nichols.

6. Contact Schneider Electric to determine if a service agreement contract is of value to NL Hydro to ensure that a dedicated technician would be provided within a guaranteed response time to address any issues with the existing circuit breakers.

7. Source at least two replacement circuit breakers from Schneider Electric to have on hand in case of equipment failure.

8. Develop a detailed change-out procedure for the work required in 2020, 2021, and 2022. It is critical to develop a detailed plan for the procurement and scheduling of the temporary generation equipment to ensure that it is available for the duration of the construction period in 2022.

2021

9. Confirm the electrical load requirements of equipment to be powered from the emergency power system. It is approaching thirty-five (35) years since the original emergency power system loads were calculated. Confirm that the existing diesel generators and electrical distribution system can accommodate the electrical load requirements for present and future growth.

10. Complete detailed engineering and tender package for the modifications required to the ASCO Synchropower System, circuit breakers, and automatic transfer switches for 2022 construction.

11. Implement a plan to replace the existing circuit breakers in the normal power switchgear.

2022

12. Issue and award Tender package to the contractor for the upgrade of the existing Synchropower System, three (3) remaining automatic transfer switches, replacement of the remaining circuit breakers, and temporary equipment power (backup generator, cables, transfer switches, etc.).

ATTACHMENT A – SINGLE LINE DIAGRAM

TO PANEL UPS-D1
UPS ROOM
CCT. 13,15,17

CONTACTOR PANEL ELECT. RM. 228. CONTROLLED FROM POWER KILL AND RESET PUSH BUTTONS IN SERVER ROOM. SEE DETAIL "C" THIS SHEET.

100A PANEL 1CPA
120/208, 3ø, 4W

18

PANEL 1CPD
120/208, 3ø, 4W

DETAIL 'A' – RAIL "A" IS SERVER ROOM 104

TO PANEL UPS-D2
IN UPS ROOM

FEEDER CABLE SPLICE BOX. ELECT ROOM 228

CONTACTOR PANEL ELECT. RM. 228. CONTROLLED FROM POWER KILL AND RESET PUSH BUTTONS IN SERVER ROOM. SEE DETAIL "C" THIS SHEET.

100A PANEL 1CPB
120/208, 3ø, 4W

18

PANEL 1CPC
120/208, 3ø, 4W

19

DETAIL 'B' – RAIL "B" IS SERVER ROOM 104

RUN TO CONTACTORS IN ELECT. ROOM 228 CONTROLLING POWER TO PANELS "1CPA" "1CPB", "1CPC" & "1CPD". SEE DETAILS "A" & "B" THIS SHEET.

POWER RESET PUSH BUTTON

POWER KILL PUSH BUTTON

IS SERVER ROOM 104

18

DETAIL 'C' – ELECTRICAL POWER EMERGENCY KILL AND RESET PUSH BUTTONS IS SERVER ROOM 104

13 19 21

TRANSFORMER SCHEDULE		
DESIGNATION	KVA	DESCRIPTION
T1	30	600 -120/208 Y WALL MOU
T2	150	600 -120/208 Y
T3	300	600 V DELTA -120/208 V GROUNDED WYE
T4	30	600V DELTA -240 DELTA UNGROUNDED WALL MOUNT
T5	45	600 V DELTA -120/208 V GROUNDED WYE WALL MOUNT
T6	30	600 V DELTA -120/208 V GROUNDED WYE WALL MOUNT
T8	112.5	600 V DELTA -120/208 V GROUNDED WYE
T9	10	208 V DELTA -120/208 V GROUNDED WYE WALL MOUNT
T10	10	208 V DELTA -120/208 V GROUNDED WYE WALL MOUNT
T11	225	600V. DELTA – 277/480V. GROUNDED WYE
T12	225	600V. DELTA – 277/480V. GROUNDED WYE

13

INCOMING UNDERGROUND SERVICE

SERVICE #1
2500kVA
12470V – 347/600V
PAD MOUNTED
UNIT SUBSTATION

EMERGENCY GENERATOR # 1 (300KW)

EMERGENCY GENERATOR # 2 (300KW)

Emergency Power Switchgear

GENERATOR CONTROL PANEL

EMERGENCY BUS

SEE DRAWING 87092-E-50 FOR BREAKER TRIP SETTINGS

19

INCOMING UNDERGROUND SERVICE

SERVICE #2
2500kVA
12470V – 347/600V
PAD MOUNTED
UNIT SUBSTATION

MAIN SWITCHBOARD
SEE NOTE 1.

3000A A-1 L-O

Normal Power Switchgear

NORMAL SERVICE BUS #1 600V., 3Ø, 4W, 3000 A

SEE DRAWING 87092-E-50 FOR BREAKER TRIP SETTINGS

19

2000A A/2 L-O

SPARE SPARE

SEE NOTE 2

NORMAL SERVICE BUS #2 600V, 3Ø, 4W, 3000 A

SPARE

SEE DRAWING 87092-E-50 FOR BREAKER TRIP SETTINGS

19

MCC. NO. 2

30 Kva

MCC. NO 1

7PA

CHILLER CONTROL PANEL

Automatic Transfer Switches

ATS-3 400 A

ATS-4 400 A

ATS-1 400 A

ATS-2 400 A

Automatic Transfer Switches

SEE DRAWING 87092-E-50 FOR BREAKER TRIP SETTINGS

SUB-FEED LUGS

PANEL 5DA
22000 AIC
600 V, 3 Ø, 4 W, 800 A

PANEL 2DA
22,000 AIC
600V, 3ø, 4W, 1200A

DP1-E
SEE NOTE 1.
22,000 AIC
600V, 3ø 4W, 400A

SEE NOTE 1
35,000 AIC ~~22,000 AIC~~
600 V, 3 Ø, 4 W, 400 A
DP1-C

DP2-C
35,000 AIC ~~22,000 AIC~~
600 V, 3 Ø, 4 W, 400 A
SEE NOTE 1

SEE NOTE 1
DP2-E
22,000 AIC
600 V, 3 Ø, 4 W, 400 A

1LA 2LA 3LA

2EHA 5EHA

T-11 RM. 228

SPLITTER
ELECT. RM. 228

2ERC RM. 228

PNL. 2ERC RM.228

4HA 5HA 6HA

4LA 5LA 6LA

2ELA 5ELA

FIRE PUMP CONTROL PANEL

SURGE PROTECTIVE DEVICE

T-11 225kVA ELECT. HALL
600V. 480V.

ENCLOSED BREAKER MOUNTED NEAR PANEL

T-12 225kVA ELECT. HALL
600V. 480V.

A/C UNIT #14

CONDENSER #13

A/C UNIT #15

CONDENSER #5

A/C UNIT #12

#12A

3HA 2HA 1HA

2HB

T-4

TRANSFORMER T-3
300 kVa

60

45 kVa

FIRST FLOOR STORAGE ROOM

PNL 1RD

TRANSFORMER T-8
112.5 kVa

ECC1 ~~7EHA~~

ECC CONTROL ROOM BEHIND MAPBOARD

CONDENSER # 4

A/C UNIT #15

TRANSFORMER T-5
45kVA

UPS-A 100kVA

R.M.M. SWITCH UPS-A

R.M.M. SWITCH UPS-B

UPS-B 100kVA

UPS-D1 120/208 V, 3ø, 4W, 400A

UPS-D2 120/208 V, 3ø, 4W, 400A

TRANSFORMER T-6
30 Kva

CSDP2
TEST ROOM 252, ECC

CSDP1
TEST ROOM 252, ECC

CORDEX CHARGER
UPS ROOM

TO PANEL 1CPA IN IS SERVER ROOM 104. SEE DETAIL "A" THIS DRAWING

UPS-D3
40A 2P

UPS-D7
COMMUNICATIONS ROOM

PDU A ECC SERVER ROOM
MAPBOARD IN ECC

4RC
ENERGY MARKETING LEVEL 4 FORMALLY LABELED OIL & GAS PANEL

MTS

UPS-D5
ECC CONTROL ROOM BEHIND MAPBOARD

UPS-D4

UPS-D6
COMMUNICATIONS ROOM

PDU B ECC SERVER ROOM
MAPBOARD IN ECC

THRU SPLICE BOX & CONTACTOR IN ELECT. RM. 228 AND ONTO PANEL 1CPB IN IS SERVER ROOM 104. SEE DETAIL "B" THIS DRAWING

SPLITTER

ELEVATOR CONTROLLERS

MCC NO. EM 1

COMBINATION TYPE MAGNETIC STARTER MOUNTED IN MCC.

A/C #2 IS SERVER ROOM 104

TRANSFORMER
150kVA

120/208V, 3ø, 4W., 600A. 5DB

4#6 & 1#8

6RA-A

PANEL 2DB 120/208 V, 3ø, 4W, 800A

2RE 1RC 2RA 1RA 3RA KP 2RD

TB 2RF 2RB 1RB 3RB 2RC

PANEL 2EDA 120/208 V, 3ø, 4W, 400A

2ELB DIMMER PANEL

A/C #12B COMMS. ROOM

2ERA 5ERA 2ERB

NOTE:
1. REFER TO DWG. E-28 FOR SWITCHBOARD AND PANELBOARD ELEVATIONS.
2. KIRK KEY INTERLOCK TO PREVENT INTERCONNECTION OF INCOMING SERVICES.

REVISION No. 13

ORIGINAL DESIGN BY BEATON SHEPPARD ASSOCIATES LTD. WITH PROJECT MANAGERS / PRIME CONSULTANTS - THE BAE GROUP

REFERENCE DRAWINGS	
87092-E-50	HYDRO PLACE – POWER DISTRIBUTION SYS. – FEEDER SCH. & BKR. TRIP SET.
87092-E5	POWER DISTRIBUTION RISER DIAGRAM
695-E-058	ECC UPS AND BATTERY ROOM LAYOUT
695-E-014	ECC COMMUNICATIONS AC SINGLE LINE DIAGRAM AND PANEL LAYOUT
699-E-016	LEVEL 2 UPS RM EMS SINGLE LINE DRAWINGS
699-E-015	NETWORK SERVICES AREA, 2ND FLOOR 48VDC BATTERY SYSTEM
DWG.NO.	TITLE

REVISIONS					
NO.	DATE	DESCRIPTION	DWN.	DESIGN.	CHK.	APP'D
21	17-04-12	AS-BUILT CONDITIONS TO APR. 01, 2017	C.N.			
20	17-02-23	AS-BUILT CONDITIONS TO MAR. 23, 2017	C.N.			
19	17-02-23	AS-BUILT CONDITIONS TO FEB. 03, 2017 REVISED	C.N.			
18	17-02-07	AS-BUILT CONDITIONS TO FEB. 03, 2017	C.N.			
17	17-02-02	AS-BUILT CONDITIONS TO JAN. 31, 2017 REVISED	C.N.			
16	17-01-31	AS-BUILT CONDITIONS TO JAN. 31, 2017	C.N.			
15	17-01-28	AS-BUILT CONDITIONS TO JAN. 28, 2017	C.N.			

NOTICE:
This Drawing contains intellectual property of Newfoundland and Labrador Hydro (HYDRO) and shall not be copied or distributed in whole or in part without prior written consent from HYDRO. Use of the drawing shall be restricted to purposes of prosecution of a contract with HYDRO.

ORIGINAL DRAWING SEALED BY D. E. NOSEWORTHY OCT. 1988

REGISTERED PROFESSIONAL ENGINEER Newfoundland Labrador P.M. GROVES SIGNATURE 28/07/16 DATE PROVINCE OF NEWFOUNDLAND

HYDRO

NEWFOUNDLAND AND LABRADOR HYDRO

18

HYDRO PLACE
ENERGY CONTROL CENTER (E.C.C.)
POWER DISTRIBUTION SCHEMATIC

ELECT.	
CIVIL	
TRANS.	
MECH.	
P&C	
TELC.	

SCALE: N.T.S.
DESIGNED: SEE NOTE
DRAWN: D.H./C.R.H.
DATE: 2006-01-09
CHECKED:
APPROVED:

W.O. NO.

DWG. NO. B1- 87092 -E-04 19 20 21

REV. 21

MADERRA DRAWING No. NAL534-EL-SL-001-01 REV S5

PLOT SCALE 1:1 C.A.D.

Apr 12, 2017 – 5:20pm

ATTACHMENT B – EXISTING CAT 3406B 300KW GENERATORS


WARNING
3406B
300

ATTACHMENT C – EXISTING ASCO SYNCHROPOWER SYSTEM


ASCO SYNCHROPOWER SYSTEM
NEWFOUNDLAND HYDRO BUILDING
ST. JOHN'S. NEWFOUNDLAND
CONTROL PANEL VOLTAGES 600 VAC 4A
120 VAC 6A
24 VDC 15A
ASCOLECTRIC limited
BRANTFORD ONTARIO
SERIAL NO. X16790
ASCO


FPL
WARNING
WARNING


ASCO
FEDERAL PIONEER
DANGER
DANGER


FPL
PIONEER
ASCO
WARNING
ARC FLASH HAZARD
FEDERAL PIONEER
DANGER

ATTACHMENT D – EXISTING FEDERAL PIONEER GENERATOR CIRCUIT BREAKERS (G1 & G2)


GENERATOR #1 BREAKER
400A 30 KAIC
OPEN
CHARGED
WARNING
ARC FLASH HAZARD
Appropriate personal protection equipment required
20
FEDERAL PIONEER LTD
CLOSE
TRIP
SWITCH IS NORMALLY ON


GENERATOR #2 BREAKER
400A 30 KAIC
OPEN
CHARGED
TO CHARGE SPRING MANUALLY
1. RAISE HANDLE
2. PUSH IN TO ENGAGE
3. ROTATE CLOCKWISE TO STOP
WARNING
ARC FLASH HAZARD
Appropriate personal protection equipment required
#81104
FPL
FEDERAL PIONEER LTD.
TYPE
POLES
VOLTS
FR. SIZE
RELAY
INT.CAP.
CONTACT I.C.
CONTROL
FREQ.
SER. NO.
Schneider
B. James
July 2018
CSS-680
TRIP
CLOSE
TRIP
CHARGING MOTOR CUT-OFF SWITCH
ON
OFF
SWITCH IS NORMAL

ATTACHMENT E – EXISTING EMERGENCY BUS DISTRIBUTION CIRCUIT BREAKERS


WARNING
ARC FLASH HAZARD
AVERTISSEMENT


EMERGENCY DISTRIBUTION
1200A 30 KAIC
347/600V 3P-4W
DP1-C
TRANSFER SWITCH

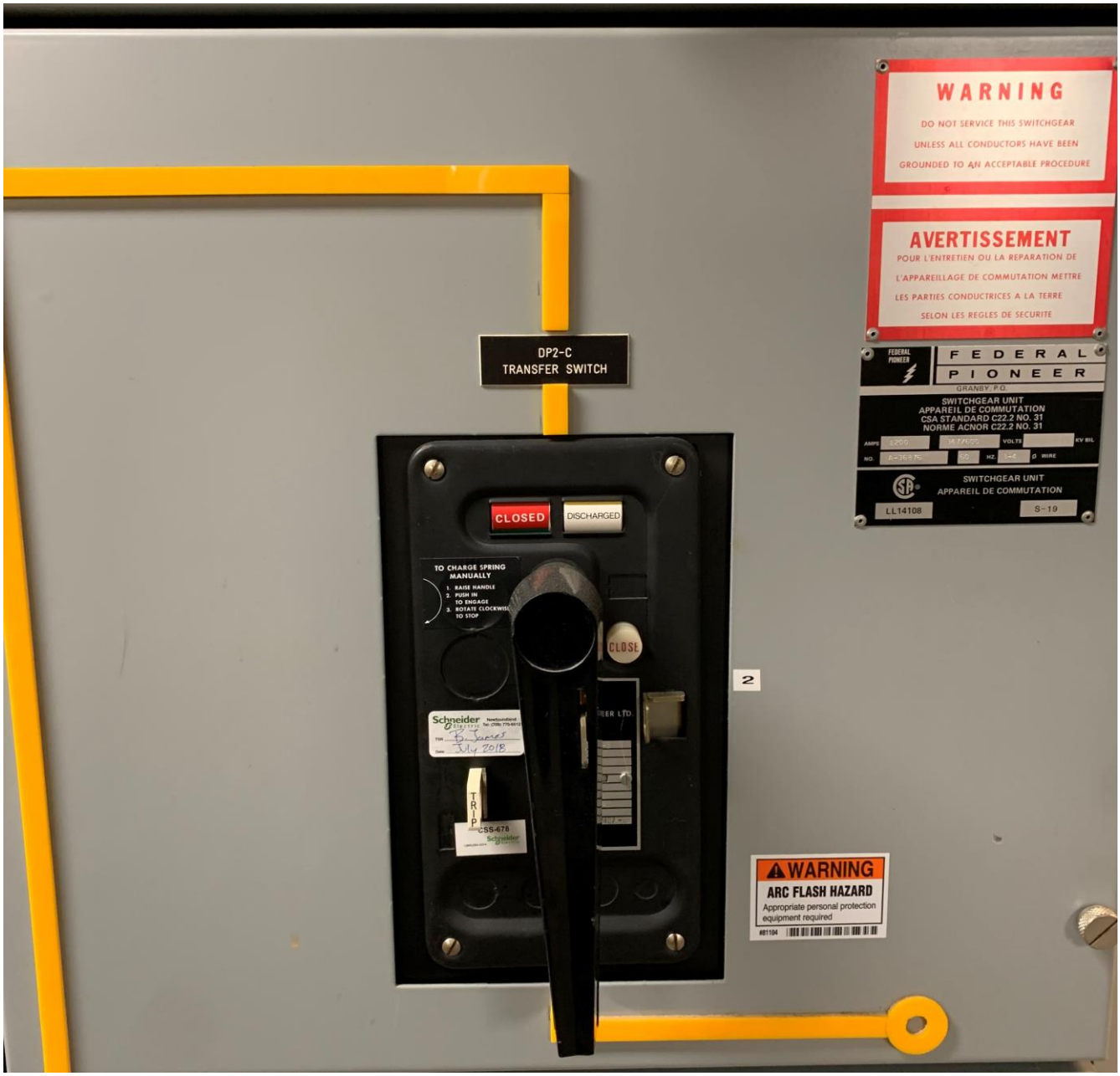
WARNING
DO NOT SERVICE THIS SWITCHGEAR
UNLESS ALL CONDUCTORS HAVE BEEN
GROUNDED TO AN ACCEPTABLE PROCEDURE
AVERTISSEMENT
POUR L'ENTRETIEN OU LA REPARATION DE
L'APPAREILLAGE DE COMMUTATION METTRE
LES PARTIES CONDUCTRICES A LA TERRE
SELON LES REGLES DE SECURITE
FEDERAL PIONEER
F E D E R A L
P I O N E E R
GRANBY, P.Q.
SWITCHGEAR UNIT
APPAREIL DE COMMUTATION
CSA STANDARD C22.2 NO. 31
NORME ACNOR C22.2 NO. 31
SWITCHGEAR UNIT
APPAREIL DE COMMUTATION
LL14108
S-19
DP2-C
TRANSFER SWITCH
CLOSED
DISCHARGED
TO CHARGE SPRING
MANUALLY
1. RAISE HANDLE
2. PUSH IN
TO ENGAGE
3. ROTATE CLOCKWISE
TO STOP
CLOSE
2
Schneider
TRIP
CSS-678
WARNING
ARC FLASH HAZARD
Appropriate personal protection
equipment required


DP1-E
TRANSFER SWITCH
CLOSED
DISCHARGED
TO CHARGE SPRING MANUALLY
1. RAISE HANDLE
2. PUSH IN TO ENGAGE
3. ROTATE CLOCKWISE TO STOP
CLOSE
3


DP2-E
TRANSFER SWITCH
CLOSED
DISCHARGED
TO CHARGE SPRING MANUALLY
1. RAISE HANDLE
2. PUSH IN TO ENGAGE
3. ROTATE CLOCKWISE TO STOP
CLOSE
TRIP
4
WARNIN
ARC FLASH HAZAR
Appropriate personal protect
equipment required

ATTACHMENT F – EXISTING ASCO AUTOMATIC TRANSFER SWITCHES


WARNING
ASCO
ASCO 962

ATTACHMENT G – EXISTING NORMAL POWER SWITCHGEAR



ATTACHMENT H – DETAILED COST ESTIMATE

Item Number	Description	Vendor	Price	Unit	Total
GENERATORS					
1	Supply and replace oil coolers	Glenn Nichols Engine Service Ltd.	$ 2,925.83	2	$ 5,851.66
2	Supply spare engine starter	Glenn Nichols Engine Service Ltd.	$ 2,337.48	1	$ 2,337.48
	Sub-Total				$ 8,189.14
SYNCHROPOWER SYSTEM					
3	Sync Controls Upgrade PCS upgrade to Asco Digital 4000 Series syncro controls • 2 gen, master controls • 24" touchscreen screen • Doors and panels (material and labour) included	ASCO Power Technologies	$ 219,976.84	**1**	$ 219,976.84
4	Low Voltage Circuit Breakers DP1-C, DP1-E, DP2-C, and DP2-E • Drawout, manually operated Masterpact NW 800A 3P ACB, 50kA @ 600V, ANSI, complete with Micrologic Trip Unit 5.0P (LSIG) with communication, complete with cradle • Engineered Retrofill Kit • New door • On-site Installation, testing & breaker settings	Schneider Electric			
5	Low Voltage Circuit Breakers GEN1 and GEN2 • Drawout, electrically operated (control 120Vac - Shunt trip and close 24Vdc) Masterpact NW 800A 3P ACB, 50kA @ 600V, ANSI, complete with Micrologic Trip Unit 5.0P (LSIG) with communication, complete with cradle. • Engineered Retrofill Kit • New door • On-site Installation, testing & breaker settings		$ 126,315.79	1	$ 126,315.79
	Sub-Total				$ 346,292.63
AUTOMATIC TRANSFER SWITCHES					
6	Replacement of ATS-1, ATS-2, ATS-3, and ATS-4 • 400 Amp Bypass Transfer Switch Replacement • 400A 347/600V ASCO switches with bypass Isolation	ASCO Power Technologies	$ 99,922.11	1	$ 99,922.11
	Sub-Total				$ 99,922.11
CONSTRUCTION COSTS					
7	Genset and Loadbank rental Allowance for 860kW, 600V Genset	Electrical Contractor	$ 3,000.00	20	$ 60,000.00
8	Materials to replace all wire and extend conduit for new transfer switch install (worst case scenario)	Electrical Contractor	$ 80,000.00	1	$ 80,000.00
9	Labor to install 4 transfer switches	Electrical Contractor	$ 70,000.00	1	$ 70,000.00
10	Labor for temp install of genset	Electrical Contractor	$ 30,000.00	1	$ 30,000.00
11	Labor for temp power load side of ATS	Electrical Contractor	$ 20,000.00	1	$ 20,000.00
	Sub-Total				$ 260,000.00
ENGINEERING					
12	Engineering	Engineering Consultant	$ 90,000.00	1	$ 90,000.00
	Sub-Total				$ 90,000.00
NL HYDRO RESOURCES					
13	Project Management and Planning	NL Hydro	$ 150,000.00	1	$ 150,000.00
	Sub-Total				$ 954,403.88
	HST				$ 120,660.58
	Total				**$ 1,075,064.46**

ATTACHMENT I –VENDOR CONTACT INFORMATION

Glenn Nichols
Glenn Nichols Engine Services Ltd.
(709)-631-2808
glennhdnichols@hotmail.com

Witold (Vito) Lemczyk
Atlantic District Sales Manager
North American Operations
ASCO Power Technologies Canada
(902)-456-9109
witold.lemczyk@ascopower.com
110 Chain Lake Drive
Unit 3G
Halifax, NS B3S 1A9
Canada

Barry James
Project Supervisor
Services
North American Operations
D 709.782.3502
M 709.770.6512
F 859.334.9925
barry.james@schneider-electric.com
47A Bremigens Blvd
A1L 4A2
Paradise, NL
Canada